CITY OF SPOKANE

BICYCLE PARKING AND SHARED MOBILITY PARKING ZONE GUIDELINES

OVERVIEW

The City of Spokane has a vision of creating a more bike friendly and healthier community by increasing the portion of trips made by bicycle in our city. This will be achieved by our current efforts of planning and completing more bike paths that meet the latest safety standards, and ensuring proper bike parking can be found at needed locations.

To assist in the appropriate placement of bike racks, this guideline provides best practices and the requirements for bike rack installation, placement and spacing, and design of bike racks. Please refer to the below table for the appropriate page if a new construction or renovations will be done. All new commercial construction projects and remodels of over 50% expansion or intensification should include a bike rack installation.

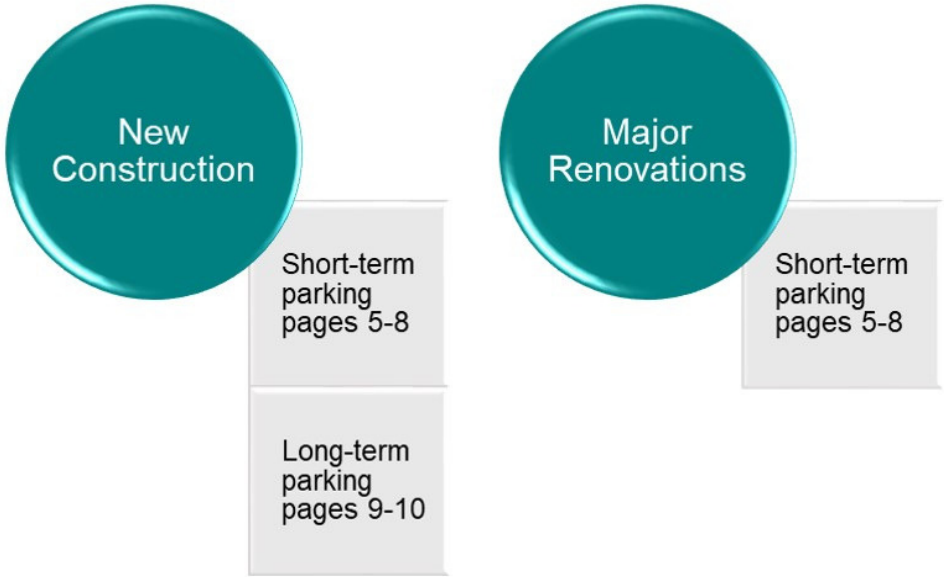

Bicycle Rack Design and Installation

Design

The following design features are key for high quality and suitability:

- Provides two points of contact between the bicycle and the rack.
- Allows for the frame and both wheels to be locked with a U-lock.
- Galvanized steel or stainless steel with powder-coating. This will make it theft-resistant, and will also wear in an aesthetically pleasing manner.
- Lifting of the bike is not required.

Inverted-U Racks

The Inverted-U Racks are simple, accommodate a variety of locks, and meet the above key design features. Due to it being the most functional, this rack is the City's standard. The standard measurement can be seen to the right. It can be used as a single stand-alone or as a corral, linked by parallel rails, as shown on the following page. The City offers free bike racks and installation for businesses. Please visit (insert web link) to make a bike rack request for your business.

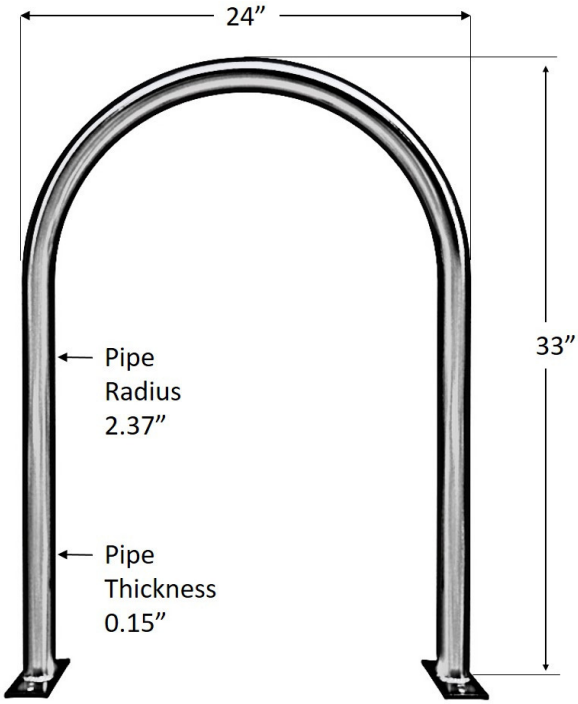

Bike Corrals

Bike corrals can be used in a car parking spot or no-standing zone, with 6-12 bike parking spots fitting within one car parking spot. Components for a bike corral in a car parking spot include:

- Delineators are required.
- Painted parameter on pavement is required.
- Bike parking stencil is required.
- Rubber Curbs are recommended for additional safety measures.

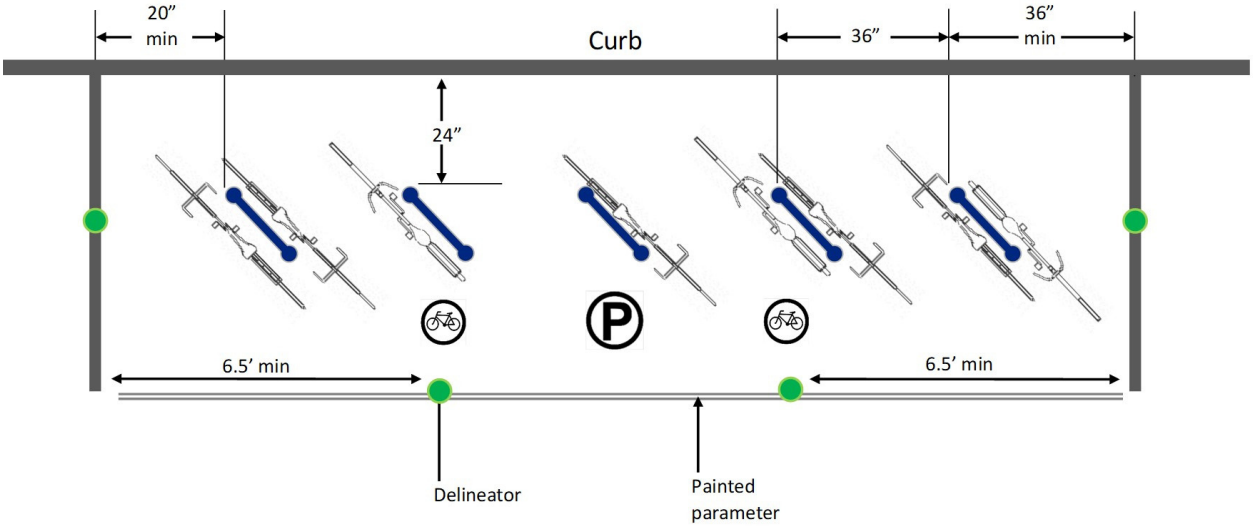

Installation

A number of the city's sidewalks are vaulted and some electric wiring exists under sidewalks. Before proceeding with the installation of a bike rack, please contact the city to ensure the location does not have a vaulted sidewalk or electric wiring beneath the surface. Please refer to the vendor's installation instructions.

Covered Bicycle Parking

When any covered automobile parking is provided, all bicycle parking shall be covered. Covered bicycle parking can be provided inside buildings, under roof overhangs or awnings, in bicycle lockers, or within or under other structures. Where required covered bicycle parking is, not within a builder locker, the cover must be:

1. Permanent
2. Designed to protect the bicycle from rainfalls
3. At least 7 feet above the floor or ground

Short-term Bicycle Parking

Short-term bicycle parking encourages shoppers, customers, and other visitors to use bicycles by providing a convenient and readily accessible place to park bicycles.

Placement

- Must be within 50 feet of the main entrance to the building to increase security and make bike travel convenient.
- Must be outside the building.
- Must fit entirely in the furnishing zone.
- Should be placed between parking stalls to avoid conflicts with opening car doors.
- Should be in an area with high visibility to pedestrians. This will reduce theft and provide higher comfort levels for users.
- At the same grade as the sidewalk or at a location that can be reached by an accessible route.
- Mounted bike racks should be placed on a paved surface. Rail mounted bike racks may be placed on a grass or wood chip surface.

Avoid

The bike rack pictured is placed too closely to the building, allowing only one bike to use the rack at a time. ini addition, the trash bin is placed too closely to the bike rack, deterring people to use the bike rack.

- Bike racks cannot be installed adjacent to disabled parking zones.
- Bike racks may not be directly placed in front of windows and doors that would act as a fire escape.

Spacing

On sidewalk, parallel to curb

- Must have a minimum sidewalk width of 9 feet.
- Must have a distance of at least 2 feet from the curb to prevent impacts from car dooring, 3 feet is recommended.
- Must have a minimum distance of 6 feet between the bicycle rack and the property line/building.
- Must be at least 15 feet from any fire hydrant.
- Must be located at a minimum of 5 feet from obstructions such as street trees, utilities, and street furniture.
- Must be at least 5 feet from loading/unloading zone at a bus stop.
- Recommended distance between multiple racks, end-to-end, is 6 feet.

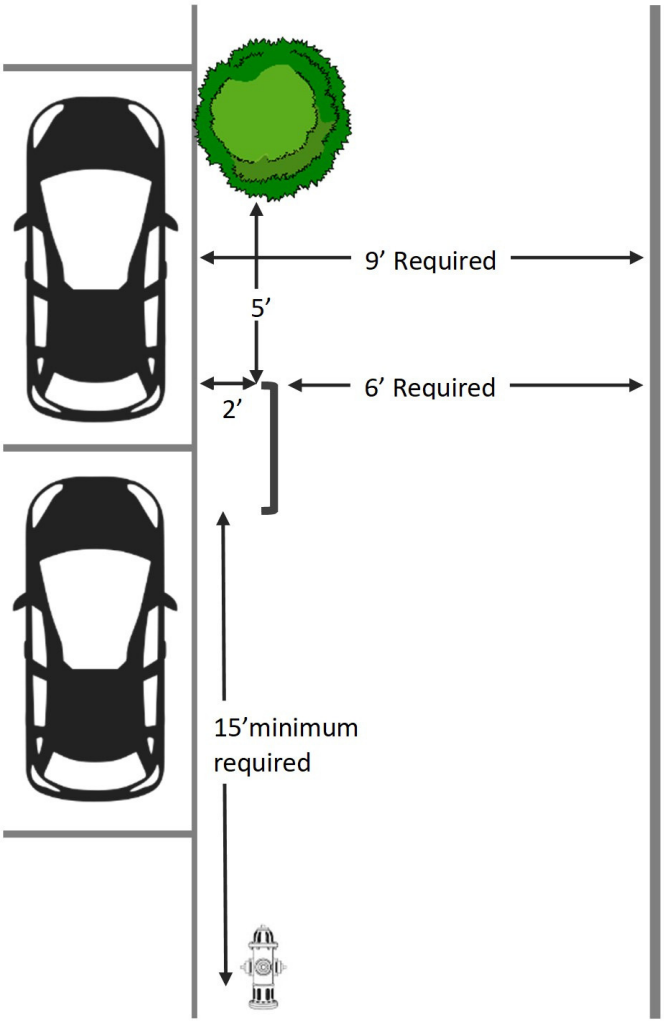

On sidewalk, perpendicular to curb

- Must have a minimum sidewalk width of 15 feet.
- Must have a distance of at least 2 feet from the curb, 3 feet is recommended.
- Must have a minimum of 10 feet between the bicycle rack and the property line/building.
- Must be at least 5 from any fire hydrant.
- Must be located at a minimum of 5 feet from obstructions such as street trees, utilities, and street furniture.
- Must be at least 5 feet from any bus loading/unloading area.
- Recommended distance between multiple racks, side-by-side, is 3 feet.

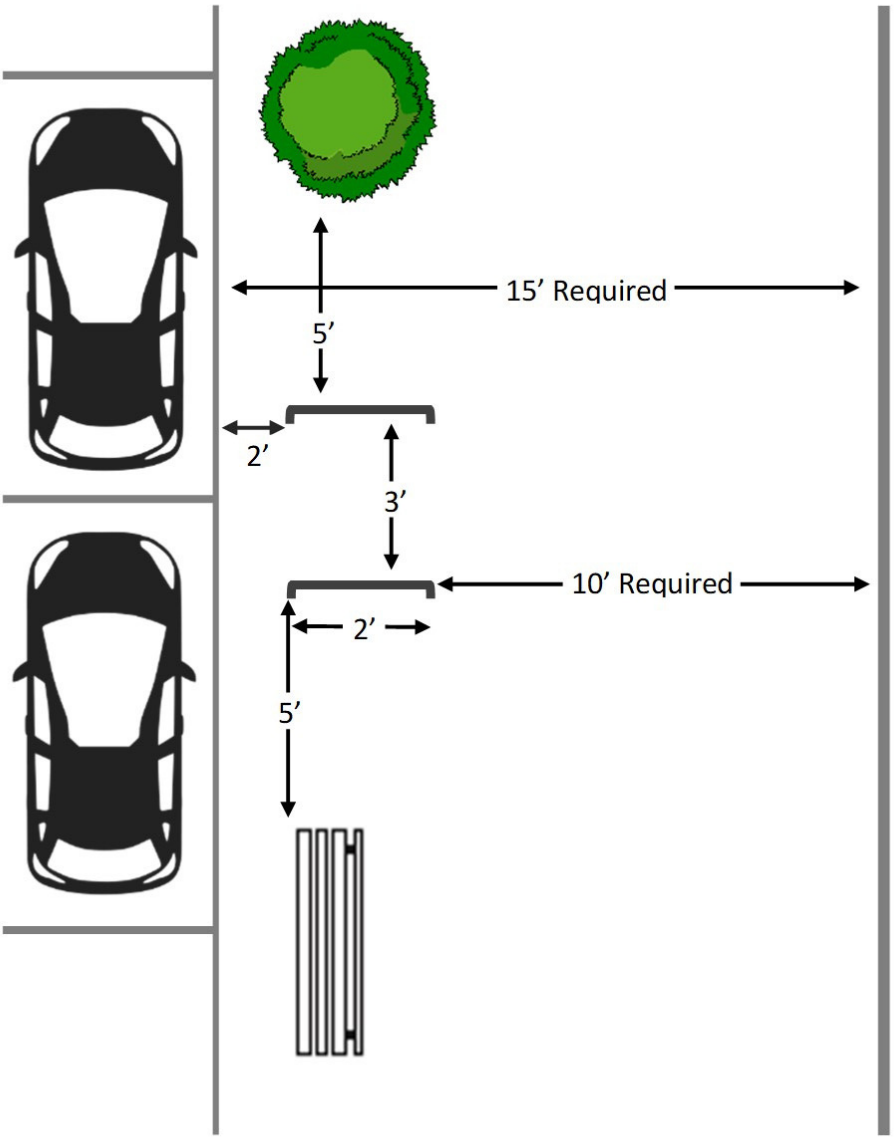

Table 1: Minimum sidewalk clearances

Description	Recommended Clearances (feet) [Minimum required]	Location
Necessary Sidewalk Widths for Bicycle Rack Installation	10 [9]	Between curb face and building or café seating (commercial)
	10 [7]	Between curb face and building (residential)
	7 [6]	Between bicycle rack and building or café seating (commercial)
	7 [4]	Between bicycle rack and building (residential)
Description	**Recommended Clearances (feet) [Minimum required]**	**Object**
Bicycle Rack Clearances from other Sidewalk Objects	[0]	In-ground utility pull box (allow enough room to remove cover)
	5 [2]	Tree or tree well; news rack; trash can; street light pole; curb cut/driveway
	7 [4]	Bicycle rack (along curb)
	3	Bicycle rack (parallel to other racks)
	[5]	Fire hydrant; Stand pipe (near street)
	[11]	Building Entrance; Stand pipe (near entrances)
	5	Parking meter pole (when placing one rack between two meter poles that are less than 18 feet apart)
	2-4	Angled car parking (depends on placement of meters, car overhang and other objects)
	4	Parking meter pole (when placing two racks between two meter poles that are greater than 18 feet apart)
	5	Traffic sign pole (midblock)
	5 [2]	Traffic sign pole (intersection)
Bicycle Rack Clearances from Parking Types	3 [2]	Parallel car parking
	3	Angled car parking between 60 and 45 degrees
	5	Perpendicular car parking

Long-term Bicycle Parking

Long-term bicycle parking provides employees, students, residents, commuters and others who generally stay at a site for several hours, a secure and weather-protected place to park bicycles.

Placement

- Must be provided in racks or lockers.
- Must be located on the site on in an area where the closest point is within 300 feet of the site.
- At least 50% of required long-term bicycle parking must be covered and meet the standards of A.1.b
- To provide security, long-term bicycle parking must be in at least one of the following locations:
  - In a locked room;
  - In an area that is enclosed by a fence with a locked gate. The fence must be either 8 feet high, or be floor-to-ceiling;
  - Within view of an attendant or security guard;
  - Within 100 feet of an attendant or security guard;
  - In an area that is monitored by a security camera; or
  - In an area that is visible from employee work areas.

Spacing

Horizontal spacing

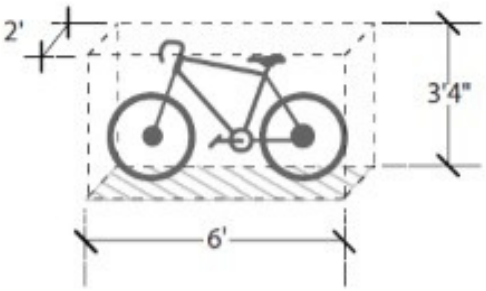

Vertical spacing

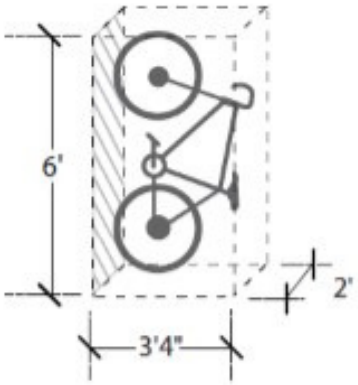

Vertical spacing

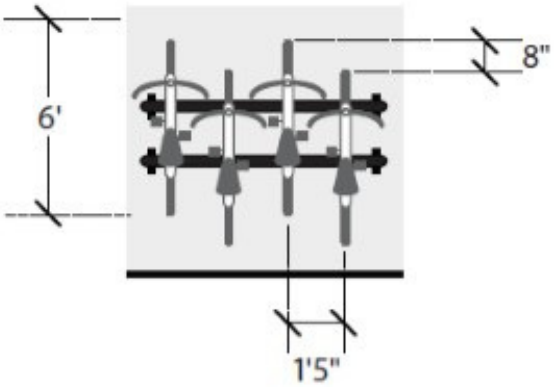

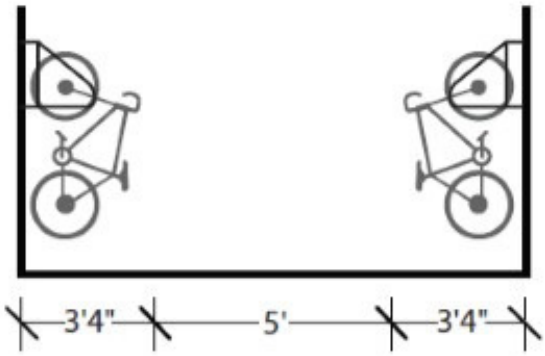

Types of Long-Term Parking

The inverted-U bike rack, or bike lockers may be used. Wall mounts may also be used to maximize space utilization, however, of the bike parking spaces provided, at least 25% should be horizontal to accommodate those who cannot lift a bike or bike that cannot fit such as cargo bikes, long-tailed bikes, tandem bikes, etc.

Shared Mobility Parking Drop Zones

Placement

The best place to park a shared mobility device is a nearby designated Parking Zone. If one is not within sight, the next best place to park the device is in the “furniture zone”, which is the section of the sidewalk between the curb and the pedestrian through zone. This is where street furniture such as lighting, benches, newspaper kiosks, utility poles, trees, can be found. Please avoid parking devices in places that obstruct pedestrian walkways, curb ramps, ADA access, loading zones, and doorways.

Sidewalk zones: Zone 3, the furniture zone, is the acceptable drop zone for shared mobility; Zones 1, 2, and 4 are not acceptable drops zones, as it could interfere with pedestrian mobility. Source: NACTO.

Bicycle Rack Request

The City of Spokane's Planning and Neighborhood Services department provides a free bike rack per development in commercial districts where space permits.

Please visit _____ for more information on eligibility and the application to request a bike rack.