CITY OF SPOKANE

REGARDING CITY COUNCIL MEETINGS

City Council's standing committee meetings, Agenda Review Sessions, and Legislative Sessions are held in City Council Chambers – Lower Level of City Hall, 808 W. Spokane Falls Blvd.

City Council Members, City staff, presenters and members of the public have the option to participate virtually via WebEx during all meetings, with the exception of Executive Sessions which are closed to the public. Call in information is below. All meetings will be streamed live on Channel 5 and online at https://my.spokanecity.org/citycable5/live and https://www.facebook.com/spokanecitycouncil.

WebEx call in information:

Agenda Review Session on November 17, 2026, 11:00 a.m.:
1-408-418-9388; access code: 2498 253 4118; password: hbPVhm9YB33 (42784699 when dialing from a phone or video system)

Legislative Session on November 18, 2026, 6:00 p.m.:
1-408-418-9388; access code: 248 775 82235; password: 0320 (0320 when dialing from a phone or video system)

To participate in public comment (including Open Forum):

Public comment sign-up is open beginning at 5:00 p.m. on Friday, November 13, 2026, and ending at 6:00 p.m. on Wednesday, November 18, 2026, via the online testimony sign-up form link which can be accessed by clicking https://my.spokanecity.org/citycouncil/meetings/signup/ or in person outside council chambers beginning at 8:00 a.m. on November 16, 2026. You must sign up by 6:00 p.m. on Wednesday, November 18, 2026, to be called on to testify. (If you are unable to access the form by clicking the hyperlink, please copy and paste the link address into your browser window.) Instructions for participation are provided on the form when you sign up.

The open forum is a limited public forum; all matters discussed in the open forum shall relate to the affairs of the City and not relate to the final, updated draft, or draft agendas, pending hearing items, or initiatives or referenda in a pending election. "Affairs of the city" shall include (i) matters within the legislative, fiscal or regulatory purview of the city, (ii) any ordinance, resolution or other official act adopted by the city council, (iii) any rule adopted by the city, (iv) the delivery of city services and operation of city departments, (v) any act of members of the city council, the mayor or members of the administration, or (vi) any other matter deemed by the council president to fall withing the affairs of the city, which determination may be overridden by majority vote of the council members present. Individuals speaking during the open forum shall address their comments to the council president and shall maintain decorum as laid out in Rule 2.15 (Participation by Members of the Public in Council Meetings).

LAND ACKNOWLEDGEMENT

We acknowledge that we are on the unceded land of the Spokane people. And that these lands were once the major trading center for the Spokanes as they shared this place and welcomed other area tribes through their relations, history, trade, and ceremony. We also want to acknowledge that the land holds the spirit of the place, through its knowledge, culture, and all the original peoples Since Time Immemorial.

As we take a moment to consider the impacts of colonization may we also acknowledge the strengths and resiliency of the Spokanes and their relatives. As we work together making decisions that benefit all, may we do so as one heart, one mind, and one spirit.

We are grateful to be on the shared lands of the Spokane people and ask for the support of their ancestors and all relations. We ask that you recognize these injustices that forever changed the lives of the Spokane people and all their relatives.

We agree to work together to stop all acts of continued injustices towards Native Americans and all our relatives. It is time for reconciliation. We must act upon the truths and take actions that will create restorative justice for all people.

Adopted by Spokane City Council on the 22nd day of March, 2021

via Resolution 2021-0019

THE CITY OF SPOKANE

COUNCIL AGENDA

November 18, 2026, Legislative Agenda

MISSION STATEMENT
TO DELIVER EFFICIENT AND EFFECTIVE SERVICES THAT FACILITATE ECONOMIC OPPORTUNITY AND ENHANCE QUALITY OF LIFE.

Mayor Lisa Brown
Council President Betsy Wilkerson

Council Member Michael Cathcart	**Council Member Paul Dillon**
Council Member Sarah Dixit	**Council Member Kitty Klitzke**
Council Member Kate Telis	**Council Member Zack Zappone**

CITY COUNCIL CHAMBERS
CITY HALL

808 W. SPOKANE FALLS BLVD.
SPOKANE, WA 99201

City of Spokane Guest Wireless access for Council Chambers:

Username: **COS Guest** (Please note the space in username)
Password: **K8vCr44y**
Both username and password are case sensitive.

Public participation in City Council meetings is governed by Council Rules 2.2, 2.15 and 2.16.

A complete copy of the council rules can be found here: City Council Rules.

SPOKANE CITY COUNCIL AGENDA REVIEW SESSIONS (BEGINNING AT 11:00 A.M. EACH TUESDAY) AND LEGISLATIVE SESSIONS (BEGINNING AT 6:00 P.M. EACH WEDNESDAY) ARE BROADCAST LIVE ON CITY CABLE CHANNEL FIVE AND STREAMED LIVE ON THE CHANNEL 5 WEBSITE. THE SESSIONS ARE REPLAYED ON CHANNEL 5 ON THURSDAYS AT 6:00 P.M. AND FRIDAYS AT 10:00 A.M.

CITY COUNCIL AGENDA: The City Council agendas may be obtained prior to Council Meetings by accessing the City's website at https://my.spokanecity.org/citycouncil/documents/.

EXECUTIVE SESSION

(Closed Session of Council)

(Executive Session may be held or reconvened during the Tuesday 11:00 a.m. Agenda Review Session or the Wednesday 6:00 p.m. Legislative Session)

LEGISLATIVE SESSION

(6:00 p.m. Wednesday, November 18, 2026)

(Council Chambers Lower Level of City Hall)

PLEDGE OF ALLEGIANCE

POETRY AT THE PODIUM, WORDS OF INSPIRATION, AND SPECIAL INTRODUCTIONS

ROLL CALL OF COUNCIL

PROCLAMATIONS AND SALUTATIONS

REPORTS FROM COMMUNITY ORGANIZATIONS

ANNOUNCEMENTS
(Announcements regarding Changes to the City Council Agenda)

EXPRESS TESTIMONY

Speakers may address any items on this entire council agenda, including any ordinance, resolution, appointment and special consideration, and may speak for up to three (3) minutes. Speakers who opt to speak during this time may not speak again during the legislative session except for Hearings and Open Forum.

FINAL HEARINGS

Speakers have up to three (3) minutes to address each final hearing item. Absent continuation, final action will be taken by council on these items.

1. **FIN 2026-0001** Hearing on ORD C36970 Adopting a Biennial Budget for the City of Spokane, Washington, for the years 2027 and 2028, and setting forth in summary form the totals of estimated revenues and appropriations for each separate fund. (Note: At the November 11 Legislative Meeting, Council voted to continue this Hearing in the November 18 Legislative Agenda. Consideration of ORD C36970 will

occur in December of 2026). (Council Sponsors: Council President Wilkerson and Council Member Dillon) Jacob Miller

2. **ORD C36969** Adopting a Six-Year Citywide Capital Improvement Program for the years 2027 through 2032. and amending The Citywide Capital Improvement Program (CIP) as referenced in Appendix C of The City of Spokane Comprehensive Plan. (Council Sponsors: Council President Wilkerson and Council Member Dillon) Jacob Miller

PROPOSED LEGISLATIVE ITEMS

Speakers have up to two (2) minutes to address the entire proposed legislative items section as a whole. No final action is expected to be taken by council on these items during this legislative session. Items in the proposed legislative items section of the agenda are expected to be moved to pending legislative items section of the agenda by the next legislative meeting, unless council takes action to modify an item's regular legislative timeline.

A. Resolutions (Proposed)

A. Ordinances (Proposed)

1. **ORD C36977** An ordinance relating to transportation impact fees; amending SMC section17D.075.180 of the Spokane Municipal Code; and setting an effective date. (Council Sponsors: Council Members Klitzke and Zappone) Inga Note

2. **ORD C36978** An ordinance relating to water conservation in Spokane and strengthening water conservation measures and regulations; adopting a new section 13.04.1926 and repealing section 13.04.1925 of the Spokane Municipal Code. (Council Sponsors: Council Members Telis and Dixit) Kate Telis
Telis Proposed Amendment to ORD C36978 filed November 16, 2026, is included in this agenda packet under ORD C36978.

FURTHER ACTION DEFERRED ON PROPOSED LEGISLATIVE ITEMS

PENDING LEGISLATIVE ITEMS

Speakers have up to two (2) minutes to address individual items in the pending legislative items section, with the exception that the following items will be grouped for public comment in the following manner: Board and Commission Appointments (2 minutes to speak to all items in this section); Reports, Contracts, and Claims (2 minutes to speak to all items in this section). No final action will be taken by council on these items. Items in the pending legislative items section are expected to be

moved to final legislative items section by the next legislative meeting, unless council takes action to modify an item's regular legislative timeline.

A. Board and Commission Appointments (Pending)

B. Reports, Contracts and Claims (Pending)

Public Safety and Community Health Committee (PSCHC) (Pending)

1. **OPR 2026-0934** Approval to purchase three (3) new Wildland Brush Trucks from Ridgehound Emergency Vehicles. (Council Sponsors: Council Members Cathcart and Telis) Kyle Chase

Public Infrastructure, Environment and Sustainability Committee (PIES) (Pending)

2. **OPR 2022-0709** Contract renewal 4 of 4 with Deeco, Inc. (Raleigh, NC) for air emissions compliance testing at the Waste to Energy Facility from 1/1/2027 - 12/31/2027 and a total cost not to exceed $155,000.00, plus tax. (Council Sponsor: Council Member Klitzke) Trace Bradburn

3. **OPR 2022-0711** Contract renewal two of two with ALS Group USA Corp, Houston, TX for stormwater and wastewater sample testing. Term October 19,2026 to October 18,2027 for a cost not to exceed $79,934.00 plus any applicable taxes. (Council Sponsor: Council Member Klitzke) Kyle Arrington

4. **OPR 2022-0900** Value blanket renewal 4 of 4 with Dykman, Inc. (Spokane Valley, WA) for the as-needed purchase of variable frequency drives (VFD's) for use at the Waste to Energy Facility from 12/15/2026-12/14/2027 and a total cost not to exceed $80,000.00, plus tax. (Council Sponsor: Council Member Klitzke) Trace Bradburn

5. **OPR 2022-0901** Value blanket renewal 4 of 4 with Helfrich Brothers Boiler Works, Inc. (Lawrence, MA) for the purchase of superheater tube panels for use at the Waste to Energy Facility from 12/15/2026 - 12/14/2026 and a total cost not to exceed $3,750,000.00, plus tax. (Council Sponsor: Council Member Klitzke) Trace Bradburn

6. **OPR 2023-0053** Value blanket renewal 2 of 2 with Oxarc, LLC (Spokane, WA) for the purchase of sodium hydroxide 50% membrane (caustic soda), for use at the Waste to Energy Facility from 2/1/2027 - 1/31/2028 and a total cost not to exceed $105,000.00, plus tax. (Council Sponsor: Council Member Klitzke) Trace Bradburn

7. **OPR 2025-0114** Contract amendment with Spokane Arts; this is a "pass through" contracting mechanism for the WSDOT NSC project and does not have a fiscal impact on the City. (Council Sponsor: Council Member Klitzke) Lorena Croucher

8. **OPR 2026-0921** Two year contract award to Hydrotech Generator Repair Plus, Inc. dba Hydraulics Plus, Inc. (Spokane Valley, WA) for the offsite rebuild of cylinders

from 1/1/2027 - 12/31/2028 and a total cost not to exceed $240,000.00, plus tax, for the two year term. (Council Sponsor: Council Member Klitzke) Trace Bradburn

9. **OPR 2026-0922** Extension of the current Interlocal Agreement (ILA) with Airway Heights for disposal services at the Waste to Energy Facility through December 31, 2026 and a transition to a new interlocal agreement from January 1, 2027 through December 31, 2031. Annual revenue is approximately $800,000.00 ($4,000,000.00 for five year term). (Council Sponsor: Council Member Klitzke) Trace Bradburn

10. **OPR 2026-0923** Extension of the current Interlocal Agreement (ILA) with the City of Cheney for disposal services at the Waste to Energy Facility through December 31, 2026 and a transition to a new interlocal agreement from January 1, 2027 through December 31, 2031. Annual revenue is approximately $600,000.00 ($3,000,000.00 for five year term). (Council Sponsor: Council Member Klitzke) Trace Bradburn

11. **OPR 2026-0924** Extension of the current Interlocal Agreement (ILA) with the City of Medical Lake for disposal services at the Waste to Energy Facility through December 31, 2026 and a transition to a new interlocal agreement from January 1, 2027 through December 31, 2031. Annual revenue is approximately $240,000.00 ($1,200,000.00 for five year term). (Council Sponsor: Council Member Klitzke) Trace Bradburn

12. **OPR 2026-0925** Purchase from HD Fowler (Spokane Valley, WA) of Cla-Valve parts for Repair and Maintenance of Pressure Reducing Valves installed in the City of Spokane Water System (Council Sponsors: Council President Wilkerson and Council Members Klitzke and Zappone) Reiner Hershaw

13. **OPR 2026-0926** Five-year value blanket order with CDA Redi Mix & Precast, Inc. (Coeur d'Alene, ID) for precast concrete products to be ordered by the Water & Hydroelectric Services and Wastewater Maintenance departments on an as-needed basis. (Council Sponsors: Council President Wilkerson and Council Members Klitzke and Zappone) Reiner Hershaw

14. **OPR 2026-0927** Grant Agreement between the City and the State of Washington Department of Ecology for a Spokane River Toxics Reduction Grant (WQCRBR-2527-Spokan-00011) for Baseline PFAS Fate and Transport Study in City of Spokane's Wastewater System. (Council Sponsor: Council Member Klitzke) Lorena Croucher

15. **OPR 2026-0928** Contract Agreement between the City and CDM Smith Inc. to provide support services related to the City's Baseline PFAS Fate and Transport Study in the City's Wastewater System. Services were procured through RFQu #6578-26 and are funded through a Department of Ecology grant. (Council Sponsor: Council Member Klitzke) Lorena Croucher

16. **OPR 2026-0929** Consent to contract with Jacobs Engineering for the Silo Digester No. 3 Mixing and Heating System Design and Specification Project for Riverside Park Water Reclamation Facility. Term of contract begins on November 1, 2026 and ends on December 31, 2031. (Council Sponsor: Council Member Klitzke) Kyle Arrington

17. **OPR 2026-0930** Purchase of one 2026 Mack Granite 64FR Dump Truck from L&M Truck Sales of Spokane for $358,832 including sales tax using SourceWell Contract Number 033126-AGI-5. (Council Sponsors: Council Members Klitzke and Zappone) Rick Giddings

18. **OPR 2025-0756** Acceptance of a contract amendment with the Department of Commerce adding $8,271,738.00 in State Fiscal Year 2027 funding for the Encampment Resolution Program, and authorizing subrecipient grant agreements with funder-approved providers. (Council Sponsors: Council Members Klitzke and Zappone) Keri Cederquist

19. **OPR 2026-0931** Contract for Monroe Bridge Suicide Prevention Barriers Study with Coffman Engineers, Inc., for $332,107.44. An administrative reserve of $33,210.74 will be set aside. (Council Sponsor: Council Member Zappone) Tyler Kimbrell

20. **OPR 2024-0436** Amendment to agreement with Spokane Neighborhood Action Partners (SNAP) to continue providing administration of the Utility Pipe Rehab Program through 12/31/2027. (Council Sponsor: Council Member Klitzke) Nate Sulya

21. **OPR 2026-0932** Seeking approval to purchase winter material storage tanks from Go To Tanks (Edmonds, WA) at a total cost not to exceed $160,000 plus applicable tax. (Council Sponsors: Council President Wilkerson and Council Member Klitzke) Clint Harris

22. **OPR 2026-0933** Seeking approval for a Value Blanket with Macon Supply, Inc. (Spokane Valley, WA) for the purchase of Elephant Armor as need from 9/1/2026-8/31/2031 at a total cost not to exceed $60,000. (Council Sponsors: Council President Wilkerson and Council Member Klitzke) Clint Harris

23. **FIN 2026-0002** Approval of the Spokane Airports' 2027 budget in the amount of $149,047,395. (Council Sponsor: Council President Wilkerson) Rob Schultz

Urban Experience Committee (UE) (Pending)

Finance and Administration Committee (F&A) (Pending)

C. Emergency Ordinances (Pending)

NOTE: Emergency ordinances are those that go into effect immediately upon passage and are not subject to veto by the mayor. Under the Spokane City Charter (Sections 16 and 19) and the Spokane Municipal Code (SMC 01.01.080), every emergency ordinance must be designated as such in the title of the ordinance and include a description of the circumstances that require the ordinance take immediate effect. Emergency ordinances require 5 affirmative votes of the council.

D. Special Budget Ordinances (Pending)

NOTE: Special Budget Ordinances amend the adopted biennial budget and include the reference to an “emergency” to comply with state laws regarding adoption of municipal

budgets. Special Budget Ordinances require 5 affirmative votes of the council. Under the City Charter (Sections 16 and 24), Special Budget Ordinances are effective immediately but are subject to veto by the Mayor.

1. **ORD C36979** Amending Ordinance No. C36794, entitled in part, "an ordinance adopting a mid-biennial modification budget for the city of Spokane", and amending it to realize wildfire mobilization reimbursements, and declaring an emergency. (Council Sponsors: Council Members Cathcart and Telis) Tom Williams

2. **ORD C36980** Amending Ordinance No. C36794, entitled in part, "an ordinance adopting a mid-biennial modification budget for the city of Spokane", and amending it to Increase the appropriation for the Spokane Police department's digital forensics software (cellebrite) due to an unanticipated increase in contract renewal cost and additional annual payment being requested earlier than anticipated, and declaring an emergency. (Council Sponsors: Council Members Cathcart and Telis) Shawna Ernst

E. Resolutions (Pending)

1. **RES 2026-0090** A resolution approving the City of Spokane Community Wildfire Protection Plan. (Council Sponsors: Council President Wilkerson and Council Member Telis) Sarah Nuss

2. **RES 2026-0085** Designating Greater Spokane Low Income Housing Development Consortium, doing business as Spokane Regional Land Bank, to establish and operate as a land bank as provided in Chapter 35.108 RCW. (Council Sponsors: Council Members Dillon, Dixit, and Klitzke) (Note: At the 11-17-26 Agenda Review Meeting, final action on RES 2026-0085 was deferred to the 12-2-26 Legislative Agenda)

F. Ordinances (Pending)

1. **ORD C36974** An ordinance modernizing and streamlining the City's Civil Infraction System; adopting a new Section 01.05.005; amending Sections of Chapter 01.05 and repealing Sections of Chapter 01.05, all of the Spokane Municipal Code. (Council Sponsors: Council President Wilkerson and Council Member Dillon) Adam McDaniel

2. **ORD C36975** An Ordinance approving and confirming the 2027 Assessments and the Assessment Roll for the Downtown Spokane Parking and Business Improvement Area, as codified and amended in Chapter 04.31C SMC, and setting an effective date. (Council Sponsors: Council Members Dillon and Zappone) Amanda Beck (Note: This item will appear under the "Final Hearings" section of the December 2, 2026, Legislative Agenda)

3. **ORD C36976** - An Ordinance approving and confirming the 2027 Assessments and Assessment Roll for the East Sprague Parking and Business Improvement Area, prepared under Ordinance C35377 as codified and amended in Chapter 04.31C SMC, and setting an effective date. (Council Sponsors: Council Members Dillon and

Zappone) Amanda Beck (Note: This item will appear under the "Final Hearings" section of the December 2, 2026, Legislative Agenda)

G. Special Considerations (Pending)

FURTHER ACTION DEFERRED ON PENDING LEGISLATIVE ITEMS

FINAL LEGISLATIVE ITEMS

Speakers will have up to two (2) minutes to address final legislative items, which will be grouped for public comment in the following manner: Board and Commission Appointments (2 minutes to speak to all items in this section); Reports, Contracts, and Claims (2 minutes to speak to all items in this section), Special Budget Ordinances, Resolutions (2 minutes to speak to all items in this section), Ordinances (2 minutes to speak to all items in this section), and Special Considerations (2 minutes to speak to all items in this section). Council is expected to take final action on these items during the evening legislative session.

A. Board and Commission Appointments (Final)

B. Reports, Contracts and Claims (Final)

Public Safety and Community Health Committee (PSCHC) (Final)

1. **OPR 2025-0392** Interlocal Agreement amendment to OPR 2025-0392 (Spokane County No. 25ASO2968) extending the agreement for an additional one-year term. (Council Sponsor: Council Member Telis)

2. **OPR 2026-0907** Pre-purchase approval for one new or used Ford Maverick or equivalent for SPD Traffic Unit from best price dealer. Price not to exceed $50,000 including sales tax and commissioning. (Council Sponsors: Council Members Telis and Cathcart)

Public Infrastructure, Environment and Sustainability Committee (PIES) (Final)

3. **OPR 2026-0908** Approval of Supplemental Agreement between the City of Spokane and Local 270 (AFSCME) Regarding medical Premium Rates (Council Sponsors: Council President Wilkerson and Council Member Klitzke) (As Amended 11-17-2026)

4. **OPR 2026-0909** - Approval of Supplemental Agreement between the City of Spokane and Managerial and Professional Association regarding Medical Premium Rates. (Council Sponsors: Council President Wilkerson and Council Member Klitzke)

Urban Experience Committee (UE) (Final)

Finance and Administration Committee (F&A) (Final)

Report of the Mayor of Pending:

1. Report of the Mayor of pending claims & payments of previously approved obligations through: 11/06/2026. Total $4,901,833.53 with Parks & Library Claims being approved by their respective boards. Claims excluding Parks & Library Total $4,425,699.01. (CPR 2026-0002)

2. Report of the Mayor of pending payroll claims of previously approved obligations through: November 7, 2026. Payroll check #582136 through check #582211 $10,346,305.32 (CPR 2026-0003)

Minutes:

1. Legislative Session Meeting Minutes – September 2, 2026 (CPR 2026-0013)

2. Legislative Session Meeting Minutes – September 9, 2026 (CPR 2026-0013)

3. Agenda Review Meeting Minutes – September 15, 2026 (CPR 2026-0013)

4. Legislative Session Meeting Minutes – September 16, 2026 (CPR 2026-0013)

5. Agenda Review Meeting Minutes – September 22, 2026 (CPR 2026-0013)

6. Agenda Review Meeting Minutes – September 29, 2026 (CPR 2026-0013)

7. Agenda Review Meeting Minutes – October 6, 2026 (CPR 2026-0013)

8. Agenda Review Meeting Minutes – October 13, 2026 (CPR 2026-0013)

C. Emergency Ordinances (Final)

NOTE: Emergency ordinances are those that go into effect immediately upon passage and are not subject to veto by the mayor. Under the Spokane City Charter (Sections 16 and 19) and the Spokane Municipal Code (SMC 01.01.080), every emergency ordinance must be designated as such in the title of the ordinance and include a description of the circumstances that require the ordinance take immediate effect. Emergency ordinances require 5 affirmative votes of the council.

D. Special Budget Ordinances (Final)

NOTE: Special Budget Ordinances amend the adopted biennial budget, and include the reference to an “emergency” to comply with state laws regarding adoption of municipal budgets. Special Budget Ordinances require 5 affirmative votes of the council. Under the City Charter (Sections 16 and 24), Special Budget Ordinances are effective immediately but are subject to veto by the Mayor.

E. Resolutions (Final)

1. **RES 2026-0078** Setting a Hearing for the right-of-way vacation of portions of Dalton Ave and Oak Street. (Council Sponsors: Council Members Klitzke and Zappone) (Note: At the 11-11-26 Legislative Meeting, Council deferred this item to the 11-18-26 Legislative Agenda)

2. **RES 2026-0084** Approving settlement in Allbery v. City of Spokane litigation, Spokane County Superior Court Cause #26-2-03767-32. (Council Sponsors: Council President Wilkerson and Council Member Klitzke)

3. ~~**RES 2026-0085** Designating Greater Spokane Low Income Housing Development Consortium, doing business as Spokane Regional Land Bank, to establish and operate as a land bank as provided in Chapter 35.108 RCW. (Council Sponsors: Council Members Dillon, Dixit, and Klitzke)~~ (Note: At the 11-17-26 Agenda Review Meeting, final action on RES 2026-0085 was deferred to the 12-2-26 Legislative Agenda)

4. **RES 2026-0086** Providing for the issuance and sale of a taxable Limited Tax General Obligation Refunding Bond in the aggregate principal amount of not to exceed $1,535,000; establishing interfund loan facilities from the Spokane Investment Pool to refinance an existing interfund loan and pay certain bond issuance costs; fixing the date, form, maturity, interest rate, terms and covenants of the bond; establishing the provisions for repayment of the interfund loan established thereby; authorizing the sale and delivery of the bond to the City, and providing for other matters properly relating thereto. (Council Sponsors: Council President Wilkerson and Council Member Dillon)

5. **RES 2026-0087** Setting forth the City Council's endorsement of the allocation of funding to Frontier Behavioral Health with funding from a one-time FY 2026 BJA Byrne Discretionary Community Project Grant from the Department of Justice, and authorizing the execution of related contracts without further City Council review and action. (Council Sponsors: Council President Wilkerson and Council Member Dillon)

6. **RES 2026-0088** Declaring the waiver of public bid requirements for the purchase of 2027 insurance premiums for specified City insurance coverages and authorizing the purchase of insurance coverages without further action. (Council Sponsors: Council President Wilkerson and Council Member Dillon) (As Amended 11-17-26)

F. Ordinances (Final)

1. **ORD C36968** Relating to Utilities, Franchise Taxes; amending Section 08.10.030 of the Spokane Municipal Code. (Council Sponsors: Council President Wilkerson and Council Member Dillon) (Note: This item received a revised agenda sheet reflecting fiscal impact)

2. **ORD C36969** (Note: This item can be found under the "Final Hearings" section of the agenda on 11-18-2026)

G. Special Considerations (Final)

OPEN FORUM

At the conclusion of legislative business, the Council may recess briefly and then convene an open public comment period for up to twenty (20) speakers, unless a majority of council members vote otherwise. If more than twenty (20) people sign up for open forum, the individuals assigned to the twenty (20) spaces available will be chosen at random, with preference given to individuals who have not spoken at open forum during the calendar month. Each speaker is limited to no more than two (2) minutes. In order to participate in Open Forum, you must sign up beginning at 5:00 p.m. on the Friday immediately preceding the legislative session and ending at 6:00 p.m. on the date of the meeting via the virtual testimony form linked in the meeting packet (https://my.spokanecity.org/citycouncil/documents/) or in person outside council chambers beginning at 8:00 a.m. on the day of the legislative session. The virtual sign-up form can also be found here: https://my.spokanecity.org/citycouncil/meetings/signup/. (If you are unable to access the form by clicking the hyperlink, please copy and paste the link address into your browser window.) Speakers must sign themselves in using a name. Instructions for virtual participation are provided on the form when you sign up. The Open Forum is a limited public forum; all matters discussed in the open forum shall relate to the affairs of the City other than items appearing on the final or draft agendas, pending hearing items, and initiatives or referenda in a pending election. Individuals speaking during the open forum shall address their comments to the Council President and shall not use profanity, engage in obscene speech, or make personal comment or verbal insults about any individual.

ADJOURNMENT

At the conclusion of the Council's business, the November 18, 2026, Regular Legislative Session of the City Council will be adjourned. The next Regular Agenda Review Meeting is scheduled for December 1, 2026, at 11:00 a.m. The next Regular Legislative Session of the City Council is scheduled for December 2, 2026, at 6:00 p.m.

AMERICANS WITH DISABILITIES ACT (ADA) INFORMATION: The City of Spokane is committed to providing equal access to its facilities, programs and services for persons with disabilities. The Spokane City Council Chambers in the lower level of Spokane City Hall, 808 W. Spokane Falls Blvd., is wheelchair accessible and is equipped with an infrared assistive listening system for persons with hearing loss. Headsets may be checked out (upon presentation of picture I.D.) at the City Cable 5 Production Booth located on the First Floor of the Municipal Building, directly above the Chase Gallery or through the meeting organizer. Individuals requesting reasonable accommodations or further information may call, write, or email Human Resources at 509.625.6373, 808 W. Spokane Falls Blvd., Spokane, WA, 99201; or ddecorde@spokanecity.org. Persons who are deaf or hard of hearing may contact Human Resources through the Washington Relay Service at 7-1-1. Please contact us forty-eight (48) hours before the meeting date.

Agenda Sheet for City Council: **Committee:** Finance & Administration **Date:** 10/27/2026 **Committee Agenda type:** Discussion **Council Meeting Date:** 11/18/2026		**Date Rec'd**	10/20/2026
		Clerk's File #	
		Cross Ref #	
		Project #	
Submitting Dept	FINANCE & ADMINISTRATION	**Bid #**	
Contact Name/Phone	JACOB MILLER X6421	**Requisition #**	
Contact E-Mail	JMILLER@SPOKANECITY.ORG		
Agenda Item Type	First Reading Ordinance		
Council Sponsor(s)	BWILKERSON PDILLON		
Sponsoring at Administrators Request	NO		
Lease? NO	**Grant Related?** NO	**Public Works?** NO	
Agenda Item Name	HEARING ON BIENNIUM BUDGET ORDINANCE		

Agenda Wording

HEARING ON AN ORDINANCE ADOPTING A BIENNIAL BUDGET FOR THE CITY OF SPOKANE, WASHINGTON, FOR THE YEARS 2027 AND 2028, AND SETTING FORTH IN SUMMARY FORM THE TOTALS OF ESTIMATED REVENUES AND APPROPRIATIONS FOR EACH SEPARATE FUND.

Summary (Background)

Adoption of the 2027-2028 Biennium Budget. The City of Spokane is a first-class city with a population of less than 300,000 residents and is required, pursuant to RCW 35.34.120, to adopt a final budget prior to the close of the fiscal year at midnight, December 31, 2026. Upon receipt of the final City Council budget amendments to the 2027-2028 budget, the Department of Management and Budget will provide an amended copy of this Ordinance to the Office of the City Clerk. The amended Ordinance will include the final fund-level budget for adoption by City Council.

What impacts would the proposal have on historically excluded communities?

N/A

How will data be collected, analyzed, and reported concerning the effect of the program/policy by racial, ethnic, gender identity, national origin, income level, disability, sexual orientation, or other existing disparities?

N/A

How will data be collected regarding the effectiveness of this program, policy, or product to ensure it is the right solution?

N/A

Describe how this proposal aligns with current City Policies, including the Comprehensive Plan, Sustainability Action Plan, Capital Improvement Program, Neighborhood Master Plans, Council Resolutions, and others?

N/A

Council Subcommittee Review

Fiscal Impact	
Approved in Current Year Budget?	N/A
Total Cost	**$**
Current Year Cost	**$**
Subsequent Year(s) Cost	**$**

Narrative

Amount		**Budget Account**
Select	**$**	**#**
Select	**$**	**#**
Select	**$**	**#**
Select	**$**	**#**
Select	**$**	**#**
Select	**$**	**#**

Funding Source	N/A
Funding Source Type	Select

Is this funding source sustainable for future years, months, etc?

Expense Occurrence	N/A

Other budget impacts (revenue generating, match requirements, etc.)

Approvals		**Additional Approvals**	
Dept Head	STRATTON, JESSICA		
Division Director	STRATTON, JESSICA		
Accounting Manager	DANIELS, DERREK		
Legal	DUGGAN, ANDI		
For the Mayor	PICCOLO, MIKE		

Distribution List	
budget@spokanecity.org	jstratton@spokanecity,org
mboston@spokanecity.org	sneal@spokanecity.org

ORDINANCE NO. C36970

AN ORDINANCE ADOPTING A BIENNIAL BUDGET FOR THE CITY OF SPOKANE, WASHINGTON, FOR THE YEARS 2027 AND 2028, AND SETTING FORTH IN SUMMARY FORM THE TOTALS OF ESTIMATED REVENUES AND APPROPRIATIONS FOR EACH SEPARATE FUND.

WHEREAS, State Law, Chapter 35.34 RCW has provided that the legislative body of any city may, by ordinance, elect to have two-year fiscal biennial budget in lieu of the annual budget which is otherwise provided for; and

WHEREAS, pursuant to State Law, Chapter 35.34, the City of Spokane, as a first-class city, is authorized to adopt a two-year biennial budget; and

WHEREAS, on June 24, 2024, the City Council adopted ordinance C36531 establishing a two-year biennial budget for the City of Spokane for the first two-year budget period beginning January 1, 2025.

WHEREAS, State Law requires that the City adopt a biennial budget before the end of the preceding calendar year; and

WHEREAS, the Mayor proposed the 2027-2028 Biennial Budget, on November 2, 2026, to the Spokane City Council as provided by law; and

WHEREAS, as required by law, on November 4, 2026, November 11, 2026, November 18, 2026, the City Council held public hearings and provided opportunity for public comment on the proposed 2027-2028 Biennial Budget; and

WHEREAS, all appropriations in the final budget must be limited to the total estimated revenues therein including the amount to be raised by all municipal revenue sources and the unencumbered fund balances estimated to be available at the close of the current fiscal year; and

WHEREAS, pursuant to RCW 35.34.200 the expenditures as classified and itemized by fund in the final budget adopted by the City Council shall constitute the City of Spokane's appropriations for the fiscal biennium commencing after midnight, December 31, 2026, subject to later adjustments as provided therein;

NOW, THEREFORE, the City Council of Spokane, Washington do ordain as follows:

Section 1. The biennial budget for the City of Spokane, Washington, for the years 2027 and 2028 is hereby adopted, by this reference, at the fund level in its final form and content as set forth below.

Section 2. Estimated revenues and expenditures, including fund balances or working capital for each separate fund of the City of Spokane, Washington, and the aggregate total for all such funds combined, for each year 2027 and 2028, are hereby appropriated for expenditure at the fund level set forth below.

Section 3. The City Chief Financial Officer is directed to transmit a copy of the budget, hereby adopted, to the Washington State Auditor's Office, and to the Association of Washington Cities.

Section 4. This ordinance shall be in force and take effect January 1, 2027.

Section 5. If any section, subsection, sentence, clause, phrase or word of this ordinance should be held to be invalid or unconstitutional by a court of competent jurisdiction, such invalidity or unconstitutionality thereof shall not affect the validity or unconstitutionality of any other section subsection, sentence, clause, phrase or word of this ordinance.

<After City Council Amendments to the 2027-2028 biennium budget, the Department of Management and Budget will insert the fund level budget and submit an amended copy of this Ordinance to the Office of the City Clerk>

ADOPTED by the City Council and APPROVED by the Mayor on _____
_____

_____
Council President

Attest:

Approved as to form:

_____
City Clerk

_____
City Attorney

_____
Mayor

_____
Date

_____
Effective Date

Agenda Sheet for City Council:

Committee: PIES **Date:** 11/10/2026

Committee Agenda type: Discussion

Council Meeting Date: 12/09/2026

Date Rec'd	10/27/2026		
Clerk's File #	ORD C36977		
Cross Ref #	ORD C36842		
Project #			
Submitting Dept	INTEGRATED CAPITAL	**Bid #**	
Contact Name/Phone	INGA NOTE 6331	**Requisition #**	
Contact E-Mail	INOTE@SPOKANECITY.ORG		
Agenda Item Type	First Reading Ordinance		
Council Sponsor(s)	KKLITZKE ZZAPPONE		
Sponsoring at Administrators Request	NO		
Lease? NO	**Grant Related?** NO	**Public Works?** NO	
Agenda Item Name	2027 ANNUAL TRANSPORTATION IMPACT FEE SCHEDULE UPDATE		

Agenda Wording

An ordinance relating to transportation impact fees; amending SMC section17D.075.180 of the Spokane Municipal Code; and setting an effective date.

Summary (Background)

Annual update of transportation impact fees as outlined in SMC 17D.075.040. The fee change is calculated annually and increases by the five-year rolling average of the Engineering News Record Construction Cost Index not to exceed 5% increase per year. The calculated rate increase for 2027 is 3.04%.

What impacts would the proposal have on historically excluded communities?

Public works services and projects are designed to serve all citizens and businesses. We strive to offer a consistent level of service to all, distribute public investment throughout the community, and respond to gaps in services identified in various City plans.

How will data be collected, analyzed, and reported concerning the effect of the program/policy by racial, ethnic, gender identity, national origin, income level, disability, sexual orientation, or other existing disparities?

n/a

How will data be collected regarding the effectiveness of this program, policy, or product to ensure it is the right solution?

Public Works follows the City's established procurement and public works bidding regulations and policies to bring items forward and then uses contract management best practices to ensure desired outcomes and regulatory compliance.

Describe how this proposal aligns with current City Policies, including the Comprehensive Plan, Sustainability Action Plan, Capital Improvement Program, Neighborhood Master Plans, Council Resolutions, and others?

This work is consistent with annual budget strategies to limit costs and approved projects in the 6-year CIP.

Council Subcommittee Review

n/a

Fiscal Impact	
Approved in Current Year Budget?	N/A
Total Cost	**$**
Current Year Cost	**$**
Subsequent Year(s) Cost	**$**

Narrative

n/a

Amount		**Budget Account**
Select	**$**	**#**
Select	**$**	**#**
Select	**$**	**#**
Select	**$**	**#**
Select	**$**	**#**
Select	**$**	**#**

Funding Source	N/A
Funding Source Type	Select

Is this funding source sustainable for future years, months, etc?

n/a

Expense Occurrence	

Other budget impacts (revenue generating, match requirements, etc.)

Approvals		**Additional Approvals**	
Dept Head	PICANCO, KEVIN		
Division Director	FEIST, MARLENE		
Accounting Manager	DANIELS, DERREK		
Legal	DUGGAN, ANDI		
For the Mayor	PICCOLO, MIKE		

Distribution List	
	icmaccounting@spokanecity.org
tax&licenses@spokanecity.org	nsulya@spokanecity.org
inote@spokanecity.org	kpicanco@spokanecity.org
eraea@spokanecity.org	

ORDINANCE NO. C36977

An ordinance relating to transportation impact fees; amending SMC section17D.075.180 of the Spokane Municipal Code; and setting an effective date.

WHEREAS, The City collects impact fees, based on the schedules in SMC 17D.075.180, or an independent fee calculation as provided for in SMC 17D.075.050, from any applicant seeking development approval from the City; and

WHEREAS, City staff use the formula for calculating impact fees set forth in the rate study on file with the Clerk's office; and

WHEREAS, The transportation impact fees increase annually by the five-year rolling average of the Engineering News Record (ENR) Construction Cost Index (CCI); and

NOW, THEREFORE, the City of Spokane does ordain:

Section 1: That SMC section 170.075.180 is amended to read as follows:

17D.075.180 Appendix A - Impact Fee Schedule Appendix A

Section 2. Severability. If any section, subsection, sentence, clause, phrase or word of this ordinance should be held to be invalid or unconstitutional by a court of competent jurisdiction, such invalidity or unconstitutionality thereof shall not affect the validity or constitutionality of any other section, subsection, sentence, clause, phrase or word of this ordinance.

Section 3. Clerical Errors. Upon approval by the city attorney, the city clerk is authorized to make necessary corrections to this ordinance, including scrivener's errors or clerical mistakes; references to other local, state, or federal laws, rules, or regulations; or numbering or referencing of ordinances or their sections and subsections.

Section 4. Effective Date. This ordinance shall be effective on that date which is the later of January 1, 2027 or that date set forth under Section 19 of the Spokane City Charter.

PASSED BY THE CITY COUNCIL ON _____

_____
Council President

Attest:	Approved as to form:
City Clerk	Assistant City Attorney
Mayor	Date
	Effective Date

((~~2026~~))2027 Downtown District Transportation Impact Fee Schedule

Effective January 1st, ((~~2026~~))2027

BASE RATE PER PM TRIP **$((~~227~~))234**

Land Use	ITE Land Use Code	Unit of Measure	Fee per Unit
COST PER TRIP			
Residential			
Single Family Detached	210	dwelling	(($~~249.65~~))$257.35
Single Family Attached (duplex, townhouse)	215	dwelling	(($~~151.39~~))$156.05
Multi-Family 1-2 level	220	dwelling	(($~~135.45~~))$139.63
Multi-Family 3-10 level	221	dwelling	(($~~103.58~~))$106.77
ADU	-	dwelling	(($~~103.58~~))$106.77
Multi Family Low-Income (1-2 level	223	dwelling	(($~~122.17~~))$125.94
Assisted Living	254	bed	(($~~50.67~~))$52.23
Continuing Care Retirement Comm	255	dwelling	(($~~40.11~~)$41.35
Nursing Home	620	bed	(($~~29.56~~))$30.47
Commercial – Services			
Hotel (3 Levels or More)	310	room	(($~~178.13~~))$183.62
Hotel/Motel	320	room	(($~~141.90~~))$146.27
Movie Theater	444	sq ft/GFA	(($~~0.51~~))$0.53
Health Club	492	sq ft/GFA	(($~~0.62~~))$0.64
Day Care	565	sq ft/GFA	(($~~1.26~~))$1.30
Bank	912	sq ft/GFA	(($~~1.38~~))$1.42
Commercial – Institutional			
Elementary School	520	sq ft/GFA	$0.14
Middle School	522	sq ft/GFA	$0.10
High School	530	sq ft/GFA	(($~~0.11~~))$0.12
University/College	550	ASF	(($~~0.15~~))$0.16
Religious Institute	560	sq ft/GFA	(($~~0.12~~))$0.13
Library	590	sq ft/GFA	(($~~0.83~~))$0.86
Hospital	610	sq ft/GFA	(($~~0.28~~))$0.29
Commercial - Administrative Office			
Veterinary Clinic	640	sq ft/GFA	(($~~1.16~~))$1.19
General Office	710	sq ft/GFA	(($~~0.40~~))$0.41
Medical Office / Clinic	720	sq ft/GFA	(($~~0.88~~))$0.90
Office Park	750	sq ft/GFA	(($~~0.39~~))$0.41

Land Use	ITE Land Use Code	Unit of Measure	Fee per Unit
COST PER TRIP			
Commercial - Retail			
Free-Standing Discount Superstore	813	sq ft/GFA	(($~~0.41~~))$0.43
Specialty Retail Center	826	sq ft/GLA	$0.24
Hardware/Paint Store	816	sq ft/GFA	(($~~0.42~~))$0.44
Nursery/Garden Center	817	sq ft/GFA	(($~~0.77~~))$0.80
Shopping Center	820	sq ft/GLA	(($~~0.35~~))$0.36
Car Sales - New/Used	841	sq ft/GFA	(($~~0.52~~))$0.54
Tire Store	848	Service bay	(($~~462.86~~))$477.14
Supermarket	850	sq ft/GFA	(($~~0.90~~))$0.93
Convenience Market	851	sq ft/GFA	(($~~2.05~~))$2.11
Pharmacy	881	sq ft/GFA	(($~~0.64~~))$0.66
Furniture Store	890	sq ft/GFA	(($~~0.03~~))$0.04
Quick Lubrication Vehicle Shop	941	Service Bay	(($~~754.00~~))$777.25
Auto Parts & Service Center	943	sq ft/GFA	(($~~0.57~~))$0.58
Service Station/Minimart/Carwash	853	VFP	(($~~779.20~~))$803.23
Industrial			
Light Industry/High Technology	110	sq ft/GFA	(($~~0.33~~))$0.34
Heavy Industrial	120	sq ft/GFA	(($~~0.23~~))$0.24
Industrial Park	132	sq ft/GFA	(($~~0.29~~))$0.30
Manufacturing	140	sq ft/GFA	(($~~0.25~~))$0.26
Warehousing	150	sq ft/GFA	$0.11
Mini-Storage	151	sq ft/GFA	$0.06
Commercial – Restaurant			
Drinking Establishment	925	sq ft/GFA	(($~~1.03~~))$1.07
Quality Restaurant	931	sq ft/GFA	(($~~0.99~~))$1.03
High Turnover Restaurant	932	sq ft/GFA	(($~~1.01~~))$1.04
Fast Casual	-	sq ft/GFA	(($~~1.67~~))$1.73
Fast Food Restaurant	934	sq ft/GFA	(($~~2.48~~))$2.56
Coffee Shop with Drive-Thru	937	sq ft/GFA	(($~~0.97~~))$1.00

Notes:

Residential uses based on the Institute of Transportation Engineers (ITE) Trip Generation Manual, 11th Edition
Other uses based on the ITE Trip Generation Manual, 9th Edition

Definitions:

VFP- Vehicle Fueling Positions (Maximum number of vehicles that can be fueled simultaneously)

GFA= Gross Floor Area

Single Family Attached (duplex, townhouse) = dwelling units with a common wall between units. Units separated by a ceiling are multi-family.

ASF= Assignable Square Feet (aka Net Assignable Area): the sum of all areas on all floors of a building assigned to, or available for assignment to, an occupant or specific use. It can be subdivided into Classroom, labs, offices, study facilities, special use, general use, support, health care, residential and unclassified. Areas defined

Drinking Establishment = contains a bar, serves alcohol and food, may have TV screens, pool tables, and other entertainment. Restaurants that specialize in food but also have a bar are considered High-Turnover Restaurants.

Quality Restaurant = duration of stay > 1 hour, not a chain, serves dinner and sometimes lunch, patrons wait to be seated, order from menu, pay after (Ex. Clinkerdagger, Anthony's, Luna)

High-Turnover Restaurant = duration of stay approx. 1 hour, often a chain restaurant, may be open 24 hours, patrons wait to be seated, order from menu (Ex. Applebee's, Denny's, Buffalo Wild Wings, The Onion, Twigs)

Fast Casual Restaurant = duration of stay < 1 hour, patrons order at counter and eat in the restaurant. Food is typically made to order. Most do not have a drive-through. (Ex. Chipotle, Panera Bread, Five Guys, Qdoba, Mod Pizza).

Appendix A

((~~2026~~))2027 Northwest District Transportation Impact Fee Schedule

Effective January 1st, ((~~2026~~))2027

BASE RATE PER PM TRIP ((~~$831~~))$856

Land Use	ITE Land Use Code	Unit of Measure	Fee per Unit
COST PER TRIP			
Residential			
Single Family Detached	210	dwelling	((~~$913.93~~))$941.43
Single Family Attached (duplex, townhouse)	215	dwelling	((~~$554.19~~))$570.87
Multi-Family 1-2 level	220	dwelling	((~~$495.86~~))$510.78
Multi-Family 3-10 level	221	dwelling	((~~$379.19~~))$390.59
ADU	-	dwelling	((~~$379.19~~))$390.59
Multi Family Low-Income (1-2 level	223	dwelling	((~~$447.24~~))$460.70
Assisted Living	254	bed	((~~$185.48~~))$191.06
Continuing Care Retirement Comm	255	dwelling	((~~$146.84~~))$151.26
Nursing Home	620	bed	((~~$108.20~~))$111.45
Commercial – Services			
Hotel (3 Levels or More)	310	room	((~~$652.09~~))$671.70
Hotel/Motel	320	room	((~~$519.46~~))$535.09
Movie Theater	444	sq ft/GFA	((~~$1.88~~))$1.94
Health Club	492	sq ft/GFA	((~~$2.27~~))$2.33
Day Care	565	sq ft/GFA	((~~$4.61~~))$4.75
Bank	912	sq ft/GFA	((~~$5.05~~))$5.20
Commercial - Institutional			
Elementary School	520	sq ft/GFA	((~~$0.51~~))$0.52
Middle School	522	sq ft/GFA	((~~$0.35~~))$0.36
High School	530	sq ft/GFA	((~~$0.42~~))$0.43
University/College	550	ASF	((~~$0.55~~))$0.57
Religious Institute	560	sq ft/GFA	((~~$0.46~~))$0.47
Library	590	sq ft/GFA	((~~$3.05~~))$3.14
Hospital	610	sq ft/GFA	((~~$1.03~~))$1.06
Commercial - Administrative Office			
Veterinary Clinic	640	sq ft/GFA	((~~$4.24~~))$4.36
General Office	710	sq ft/GFA	((~~$1.45~~))$1.49
Medical Office / Clinic	720	sq ft/GFA	((~~$3.20~~))$3.30
Office Park	750	sq ft/GFA	((~~$1.44~~))$1.48

Land Use	ITE Land Use Code	Unit of Measure	Fee per Unit
COST PER TRIP			
Commercial - Retail			
Free-Standing Discount Superstore	813	sq ft/GFA	((~~$1.52~~))$1.56
Specialty Retail Center	826	sq ft/GLA	((~~$0.87~~))$0.89
Hardware/Paint Store	816	sq ft/GFA	((~~$1.55~~))$1.60
Nursery/Garden Center	817	sq ft/GFA	((~~$2.83~~))$2.91
Shopping Center	820	sq ft/GLA	((~~$1.29~~))$1.33
Car Sales - New/Used	841	sq ft/GFA	((~~$1.92~~))$1.97
Tire Store	848	Service bay	((~~$1,694.44~~))$1,745.42
Supermarket	850	sq ft/GFA	((~~$3.31~~))$3.41
Convenience Market	851	sq ft/GFA	((~~$7.49~~))$7.72
Pharmacy	881	sq ft/GFA	((~~$2.35~~))$2.42
Furniture Store	890	sq ft/GFA	$0.13
Quick Lubrication Vehicle Shop	941	Service Bay	((~~$2,760.25~~))$2,843.29
Auto Parts & Service Center	943	sq ft/GFA	((~~$2.08~~))$2.14
Service Station/Minimart/Carwash	853	VFP	((~~$2,852.49~~))$2,938.31
Industrial			
Light Industry/High Technology	110	sq ft/GFA	((~~$1.21~~))$1.25
Heavy Industrial	120	sq ft/GFA	((~~$0.85~~))$0.87
Industrial Park	132	sq ft/GFA	((~~$1.06~~))$1.09
Manufacturing	140	sq ft/GFA	((~~$0.91~~))$0.94
Warehousing	150	sq ft/GFA	((~~$0.40~~))$0.41
Mini-Storage	151	sq ft/GFA	$0.21
Commercial - Restaurant			
Drinking Establishment	925	sq ft/GFA	((~~$3.79~~))$3.90
Quality Restaurant	931	sq ft/GFA	((~~$3.64~~))$3.75
High Turnover Restaurant	932	sq ft/GFA	((~~$3.68~~))$3.79
Fast Casual	-	sq ft/GFA	((~~$6.13~~))$6.31
Fast Food Restaurant	934	sq ft/GFA	((~~$9.09~~))$9.36
Coffee Shop with Drive-Thru	937	sq ft/GFA	((~~$3.56~~))$3.66

Notes:

Residential uses based on the Institute of Transportation Engineers (ITE) Trip Generation Manual, 11th Edition
Other uses based on the ITE Trip Generation Manual, 9th Edition

Definitions:

VFP- Vehicle Fueling Positions (Maximum number of vehicles that can be fueled simultaneously)

GFA= Gross Floor Area

Single Family Attached (duplex, townhouse) = dwelling units with a common wall between units. Units separated by a ceiling are multi-family.

ASF= Assignable Square Feet (aka Net Assignable Area): the sum of all areas on all floors of a building assigned to, or available for assignment to, an occupant or specific use. It can be subdivided into Classroom, labs, offices, study facilities, special use, general use, support, health care, residential and unclassified. Areas defined

Drinking Establishment = contains a bar, serves alcohol and food, may have TV screens, pool tables, and other entertainment. Restaurants that specialize in food but also have a bar are considered High-Turnover Restaurants.

Quality Restaurant = duration of stay > 1 hour, not a chain, serves dinner and sometimes lunch, patrons wait to be seated, order from menu, pay after (Ex. Clinkerdagger, Anthony's, Luna)

High-Turnover Restaurant = duration of stay approx. 1 hour, often a chain restaurant, may be open 24 hours, patrons wait to be seated, order from menu (Ex. Applebee's, Denny's, Buffalo Wild Wings, The Onion, Twigs)

Fast Casual Restaurant = duration of stay < 1 hour, patrons order at counter and eat in the restaurant. Food is typically made to order. Most do not have a drive-through. (Ex. Chipotle, Panera Bread, Five Guys, Qdoba, Mod Pizza).

Appendix A

((~~2026~~))2027 South District Transportation Impact Fee Schedule

Effective January 1st, ((~~2026~~))2027

BASE RATE PER PM TRIP ((~~$2,813~~))$2,899

Land Use	ITE Land Use Code	Unit of Measure	Fee per Unit
COST PER TRIP			
Residential			
Single Family Detached	210	dwelling	((~~$3,093.74~~))$3,188.32
Single Family Attached (duplex, townhouse)	215	dwelling	((~~$1,875.99~~))$1,933.34
Multi-Family 1-2 level	220	dwelling	((~~$1,678.52~~))$1,729.83
Multi-Family 3-10 level	221	dwelling	((~~$1,283.57~~))$1,322.81
ADU	-	dwelling	((~~$1,283.57~~))$1,322.81
Multi Family Low-Income (1-2 level	223	dwelling	((~~$1,513.96~~))$1,560.24
Assisted Living	254	bed	((~~$627.86~~))$647.06
Continuing Care Retirement Comm	255	dwelling	((~~$497.06~~))$512.25
Nursing Home	620	bed	((~~$366.25~~))$377.45
Commercial - Services			
Hotel (3 Levels or More)	310	room	((~~$2,207.36~~))$2,274.85
Hotel/Motel	320	room	((~~$1,758.41~~))$1,812.16
Movie Theater	444	sq ft/GFA	((~~$6.37~~))$6.56
Health Club	492	sq ft/GFA	((~~$7.67~~))$7.91
Day Care	565	sq ft/GFA	((~~$15.62~~))$16.10
Bank	912	sq ft/GFA	((~~$17.09~~))$17.61
Commercial – Institutional			
Elementary School	520	sq ft/GFA	((~~$1.72~~))$1.77
Middle School	522	sq ft/GFA	((~~$1.19~~))$1.22
High School	530	sq ft/GFA	((~~$1.42~~))$1.46
University/College	550	ASF	((~~$1.88~~))$1.94
Religious Institute	560	sq ft/GFA	((~~$1.55~~))$1.59
Library	590	sq ft/GFA	((~~$10.32~~))$10.63
Hospital	610	sq ft/GFA	((~~$3.50~~))$3.60
Commercial - Administrative Office			
Veterinary Clinic	640	sq ft/GFA	((~~$14.34~~))$14.78
General Office	710	sq ft/GFA	((~~$4.90~~))$5.05
Medical Office / Clinic	720	sq ft/GFA	((~~$10.85~~))$11.18
Office Park	750	sq ft/GFA	((~~$4.87~~))$5.02

Land Use	ITE Land Use Code	Unit of Measure	Fee per Unit
COST PER TRIP			
Commercial - Retail			
Free-Standing Discount Superstore	813	sq ft/GFA	((~~$5.14~~))$5.30
Specialty Retail Center	826	sq ft/GLA	((~~$2.93~~))$3.02
Hardware/Paint Store	816	sq ft/GFA	((~~$5.24~~))$5.40
Nursery/Garden Center	817	sq ft/GFA	((~~$9.57~~))$9.86
Shopping Center	820	sq ft/GLA	((~~$4.38~~))$4.52
Car Sales - New/Used	841	sq ft/GFA	((~~$6.49~~))$6.68
Tire Store	848	Service bay	((~~$5,735.82~~))$5,911.18
Supermarket	850	sq ft/GFA	((~~$11.20~~))$11.54
Convenience Market	851	sq ft/GFA	((~~$25.36~~))$26.13
Pharmacy	881	sq ft/GFA	((~~$7.94~~))$8.19
Furniture Store	890	sq ft/GFA	((~~$0.43~~))$0.45
Quick Lubrication Vehicle Shop	941	Service Bay	((~~$9,343.66~~))$9,629.32
Auto Parts & Service Center	943	sq ft/GFA	((~~$7.03~~))$7.24
Service Station/Minimart/Carwash	853	VFP	((~~$9,655.90~~))$9,951.11
Industrial			
Light Industry/High Technology	110	sq ft/GFA	((~~$4.09~~))$4.22
Heavy Industrial	120	sq ft/GFA	((~~$2.87~~))$2.96
Industrial Park	132	sq ft/GFA	((~~$3.59~~))$3.70
Manufacturing	140	sq ft/GFA	((~~$3.08~~))$3.17
Warehousing	150	sq ft/GFA	((~~$1.35~~))$1.39
Mini-Storage	151	sq ft/GFA	((~~$0.69~~))$0.72
Commercial – Restaurant			
Drinking Establishment	925	sq ft/GFA	((~~$12.82~~))$13.22
Quality Restaurant	931	sq ft/GFA	((~~$12.33~~))$12.70
High Turnover Restaurant	932	sq ft/GFA	((~~$12.47~~))$12.85
Fast Casual	-	sq ft/GFA	((~~$20.75~~))$21.38
Fast Food Restaurant	934	sq ft/GFA	((~~$30.77~~))$31.71
Coffee Shop with Drive-Thru	937	sq ft/GFA	((~~$12.04~~))$12.41

Notes:

Residential uses based on the Institute of Transportation Engineers (ITE) Trip Generation Manual, 11th Edition
Other uses based on the ITE Trip Generation Manual, 9th Edition

Definitions:

VFP- Vehicle Fueling Positions (Maximum number of vehicles that can be fueled simultaneously)

GFA= Gross Floor Area

Single Family Attached (duplex, townhouse) = dwelling units with a common wall between units. Units separated by a ceiling are multi-family.

ASF= Assignable Square Feet (aka Net Assignable Area): the sum of all areas on all floors of a building assigned to, or available for assignment to, an occupant or specific use. It can be subdivided into Classroom, labs, offices, study facilities, special use, general use, support, health care, residential and unclassified. Areas defined

Drinking Establishment = contains a bar, serves alcohol and food, may have TV screens, pool tables, and other entertainment. Restaurants that specialize in food but also have a bar are considered High-Turnover Restaurants.

Quality Restaurant = duration of stay > 1 hour, not a chain, serves dinner and sometimes lunch, patrons wait to be seated, order from menu, pay after (Ex. Clinkerdagger, Anthony's, Luna)

High-Turnover Restaurant = duration of stay approx. 1 hour, often a chain restaurant, may be open 24 hours, patrons wait to be seated, order from menu (Ex. Applebee's, Denny's, Buffalo Wild Wings, The Onion, Twigs)

Fast Casual Restaurant = duration of stay < 1 hour, patrons order at counter and eat in the restaurant. Food is typically made to order. Most do not have a drive-through. (Ex. Chipotle, Panera Bread, Five Guys, Qdoba, Mod Pizza).

Appendix A

((~~2026~~))2027 Northeast District Transportation Impact Fee Schedule

Effective January 1st, ((~~2026~~))2027

BASE RATE PER PM TRIP ((~~$694~~))$715

Land Use	ITE Land Use Code	Unit of Measure	Fee per Unit
COST PER TRIP			
Residential			
Single Family Detached	210	dwelling	((~~$763.26~~))$786.36
Single Family Attached (duplex, townhouse)	215	dwelling	((~~$462.83~~))$476.83
Multi-Family 1-2 level	220	dwelling	((~~$414.11~~))$426.64
Multi-Family 3-10 level	221	dwelling	((~~$316.67~~))$326.25
ADU	-	dwelling	((~~$316.67~~))$326.25
Multi Family Low-Income (1-2 level	223	dwelling	((~~$373.51~~))$384.81
Assisted Living	254	bed	((~~$154.90~~))$159.59
Continuing Care Retirement Comm	255	dwelling	((~~$122.63~~))$126.34
Nursing Home	620	bed	((~~$90.36~~))$93.09
Commercial – Services			
Hotel (3 Levels or More)	310	room	((~~$544.58~~))$561.06
Hotel/Motel	320	room	((~~$433.82~~))$446.95
Movie Theater	444	sq ft/GFA	((~~$1.57~~))$1.62
Health Club	492	sq ft/GFA	((~~$1.89~~))$1.95
Day Care	565	sq ft/GFA	((~~$3.85~~))$3.97
Bank	912	sq ft/GFA	((~~$4.22~~))$4.34
Commercial – Institutional			
Elementary School	520	sq ft/GFA	((~~$0.42~~))$0.44
Middle School	522	sq ft/GFA	((~~$0.29~~))$0.30
High School	530	sq ft/GFA	((~~$0.35~~))$0.36
University/College	550	ASF	((~~$0.46~~))$0.48
Religious Institute	560	sq ft/GFA	((~~$0.38~~))$0.39
Library	590	sq ft/GFA	((~~$2.55~~))$2.62
Hospital	610	sq ft/GFA	((~~$0.86~~))$0.89
Commercial - Administrative Office			
Veterinary Clinic	640	sq ft/GFA	((~~$3.54~~))$3.64
General Office	710	sq ft/GFA	((~~$1.21~~))$1.25
Medical Office / Clinic	720	sq ft/GFA	((~~$2.68~~))$2.76
Office Park	750	sq ft/GFA	((~~$1.20~~))$1.24

Land Use	ITE Land Use Code	Unit of Measure	Fee per Unit
COST PER TRIP			
Commercial - Retail			
Free-Standing Discount Superstore	813	sq ft/GFA	((~~$1.27~~))$1.31
Specialty Retail Center	826	sq ft/GLA	((~~$0.72~~))$0.75
Hardware/Paint Store	816	sq ft/GFA	((~~$1.29~~))$1.33
Nursery/Garden Center	817	sq ft/GFA	((~~$2.36~~))$2.43
Shopping Center	820	sq ft/GLA	((~~$1.08~~))$1.11
Car Sales - New/Used	841	sq ft/GFA	((~~$1.60~~))$1.65
Tire Store	848	Service bay	((~~$1,415.09~~))$1457.91
Supermarket	850	sq ft/GFA	((~~$2.76~~))$2.85
Convenience Market	851	sq ft/GFA	((~~$6.26~~))$6.45
Pharmacy	881	sq ft/GFA	((~~$1.96~~))$2.02
Furniture Store	890	sq ft/GFA	$0.11
Quick Lubrication Vehicle Shop	941	Service Bay	((~~$2,305.19~~))$2,374.94
Auto Parts & Service Center	943	sq ft/GFA	((~~$1.73~~))$1.79
Service Station/Minimart/Carwash	853	VFP	((~~$2,382.22~~))$2,454.31
Industrial			
Light Industry/High Technology	110	sq ft/GFA	((~~$1.01~~))$1.04
Heavy Industrial	120	sq ft/GFA	((~~$0.71~~))$0.73
Industrial Park	132	sq ft/GFA	((~~$0.88~~))$0.91
Manufacturing	140	sq ft/GFA	((~~$0.76~~))$0.78
Warehousing	150	sq ft/GFA	((~~$0.33~~))$0.34
Mini-Storage	151	sq ft/GFA	((~~$0.17~~))$0.18
Commercial – Restaurant			
Drinking Establishment	925	sq ft/GFA	((~~$3.16~~))$3.26
Quality Restaurant	931	sq ft/GFA	((~~$3.04~~))$3.13
High Turnover Restaurant	932	sq ft/GFA	((~~$3.08~~))$3.17
Fast Casual	-	sq ft/GFA	((~~$5.12~~))$5.27
Fast Food Restaurant	934	sq ft/GFA	((~~$7.59~~))$7.82
Coffee Shop with Drive-Thru	937	sq ft/GFA	((~~$2.97~~))$3.06

Notes:

Residential uses based on the Institute of Transportation Engineers (ITE) Trip Generation Manual, 11th Edition
Other uses based on the ITE Trip Generation Manual, 9th Edition

Definitions:

VFP- Vehicle Fueling Positions (Maximum number of vehicles that can be fueled simultaneously)

GFA= Gross Floor Area

Single Family Attached (duplex, townhouse) = dwelling units with a common wall between units. Units separated by a ceiling are multi-family.

ASF= Assignable Square Feet (aka Net Assignable Area): the sum of all areas on all floors of a building assigned to, or available for assignment to, an occupant or specific use. It can be subdivided into Classroom, labs, offices, study facilities, special use, general use, support, health care, residential and unclassified. Areas defined

Drinking Establishment = contains a bar, serves alcohol and food, may have TV screens, pool tables, and other entertainment. Restaurants that specialize in food but also have a bar are considered High-Turnover Restaurants.

Quality Restaurant = duration of stay > 1 hour, not a chain, serves dinner and sometimes lunch, patrons wait to be seated, order from menu, pay after (Ex. Clinkerdagger, Anthony's, Luna)

High-Turnover Restaurant = duration of stay approx. 1 hour, often a chain restaurant, may be open 24 hours, patrons wait to be seated, order from menu (Ex. Applebee's, Denny's, Buffalo Wild Wings, The Onion, Twigs)

Fast Casual Restaurant = duration of stay < 1 hour, patrons order at counter and eat in the restaurant. Food is typically made to order. Most do not have a drive-through. (Ex. Chipotle, Panera Bread, Five Guys, Qdoba, Mod Pizza).

Appendix A

((2026))2027 West Plains District Transportation Impact Fee Schedule

Effective January 1st, ((2026))2027

BASE RATE PER PM TRIP ((~~$4,048~~))$4,171

Land Use	ITE Land Use Code	Unit of Measure	Fee per Unit
COST PER TRIP			
Residential			
Single Family Detached	210	dwelling	((~~$4,451.99~~))$4,587.27
Single Family Attached (duplex, townhouse)	215	dwelling	((~~$2,699.61~~))$2,781.64
Multi-Family 1-2 level	220	dwelling	((~~$2,415.44~~))$2,488.84
Multi-Family 3-10 level	221	dwelling	((~~$1,847.10~~))$1,903.23
ADU	-	dwelling	((~~$1,847.10~~))$1,903.23
Multi Family Low-Income (1-2 level	223	dwelling	((~~$2,178.63~~))$2,244.83
Assisted Living	254	bed	((~~$903.51~~))$930.97
Continuing Care Retirement Comm	255	dwelling	((~~$715.28~~))$737.02
Nursing Home	620	bed	((~~$527.05~~))$543.06
Commercial – Services			
Hotel (3 Levels or More)	310	room	((~~$3,176.47~~))$3,272.98
Hotel/Motel	320	room	((~~$2,530.40~~))$2,607.29
Movie Theater	444	sq ft/GFA	((~~$9.16~~))$9.44
Health Club	492	sq ft/GFA	((~~$11.04~~))$11.37
Day Care	565	sq ft/GFA	((~~$22.48~~))$23.16
Bank	912	sq ft/GFA	((~~$24.59~~))$25.34
Commercial – Institutional			
Elementary School	520	sq ft/GFA	((~~$2.47~~))$2.54
Middle School	522	sq ft/GFA	((~~$1.71~~))$1.76
High School	530	sq ft/GFA	((~~$2.04~~))$2.10
University/College	550	ASF	((~~$2.70~~))$2.78
Religious Institute	560	sq ft/GFA	((~~$2.23~~))$2.29
Library	590	sq ft/GFA	((~~$14.85~~))$15.30
Hospital	610	sq ft/GFA	((~~$5.03~~))$5.15
Commercial - Administrative Office			
Veterinary Clinic	640	sq ft/GFA	((~~$20.64~~))$21.26
General Office	710	sq ft/GFA	((~~$7.06~~))$7.27
Medical Office / Clinic	720	sq ft/GFA	((~~$15.61~~))$16.08
Office Park	750	sq ft/GFA	((~~$7.01~~))$7.22

Land Use	ITE Land Use Code	Unit of Measure	Fee per Unit
COST PER TRIP			
Commercial - Retail			
Free-Standing Discount Superstore	813	sq ft/GFA	((~~$7.40~~))$7.62
Specialty Retail Center	826	sq ft/GLA	((~~$4.22~~))$4.35
Hardware/Paint Store	816	sq ft/GFA	((~~$7.54~~))$7.77
Nursery/Garden Center	817	sq ft/GFA	((~~$13.77~~))$14.18
Shopping Center	820	sq ft/GLA	((~~$6.31~~))$6.50
Car Sales - New/Used	841	sq ft/GFA	((~~$9.33~~))$9.62
Tire Store	848	Service bay	((~~$8,254.03~~))$8,504.84
Supermarket	850	sq ft/GFA	((~~$16.12~~))$16.61
Convenience Market	851	sq ft/GFA	((~~$36.49~~))$37.60
Pharmacy	881	sq ft/GFA	((~~$11.43~~))$11.78
Furniture Store	890	sq ft/GFA	((~~$0.62~~))$0.64
Quick Lubrication Vehicle Shop	941	Service Bay	((~~$13,445.84~~))$13,854.39
Auto Parts & Service Center	943	sq ft/GFA	((~~$10.11~~))$10.42
Service Station/Minimart/Carwash	853	VFP	((~~$13,895.16~~))$14,317.37
Industrial			
Light Industry/High Technology	110	sq ft/GFA	((~~$5.89~~))$6.07
Heavy Industrial	120	sq ft/GFA	((~~$4.13~~))$4.25
Industrial Park	132	sq ft/GFA	((~~$5.16~~))$5.32
Manufacturing	140	sq ft/GFA	((~~$4.43~~))$4.57
Warehousing	150	sq ft/GFA	((~~$1.94~~))$2.00
Mini-Storage	151	sq ft/GFA	((~~$1.00~~))$1.03
Commercial – Restaurant			
Drinking Establishment	925	sq ft/GFA	((~~$18.45~~))$19.01
Quality Restaurant	931	sq ft/GFA	((~~$17.74~~))$18.28
High Turnover Restaurant	932	sq ft/GFA	((~~$17.94~~))$18.49
Fast Casual	-	sq ft/GFA	((~~$29.86~~))$30.77
Fast Food Restaurant	934	sq ft/GFA	((~~$44.28~~))$45.62
Coffee Shop with Drive-Thru	937	sq ft/GFA	((~~$17.33~~))$17.85

Notes:

Residential uses based on the Institute of Transportation Engineers (ITE) Trip Generation Manual, 11th Edition
Other uses based on the ITE Trip Generation Manual, 9th Edition

Definitions:

VFP- Vehicle Fueling Positions (Maximum number of vehicles that can be fueled simultaneously)

GFA= Gross Floor Area

Single Family Attached (duplex, townhouse) = dwelling units with a common wall between units. Units separated by a ceiling are multi-family.

ASF= Assignable Square Feet (aka Net Assignable Area): the sum of all areas on all floors of a building assigned to, or available for assignment to, an occupant or specific use. It can be subdivided into Classroom, labs, offices, study facilities, special use, general use, support, health care, residential and unclassified. Areas defined

Drinking Establishment = contains a bar, serves alcohol and food, may have TV screens, pool tables, and other entertainment. Restaurants that specialize in food but also have a bar are considered High-Turnover Restaurants.

Quality Restaurant = duration of stay > 1 hour, not a chain, serves dinner and sometimes lunch, patrons wait to be seated, order from menu, pay after (Ex. Clinkerdagger, Anthony's, Luna)

High-Turnover Restaurant = duration of stay approx. 1 hour, often a chain restaurant, may be open 24 hours, patrons wait to be seated, order from menu (Ex. Applebee's, Denny's, Buffalo Wild Wings, The Onion, Twigs)

Fast Casual Restaurant = duration of stay < 1 hour, patrons order at counter and eat in the restaurant. Food is typically made to order. Most do not have a drive-through. (Ex. Chipotle, Panera Bread, Five Guys, Qdoba, Mod Pizza).

((~~2026~~))2027 Latah District Transportation Impact Fee Schedule

Effective January 1st, ((~~2026~~))2027

BASE RATE PER PM TRIP ((~~$7159~~))$7,377

Land Use	ITE Land Use Code	Unit of Measure	Fee per Unit
COST PER TRIP			
Residential			
Single Family Detached	210	dwelling	((~~$7,873.47~~))$8,113.22
Single Family Attached (duplex, townhouse)	215	dwelling	((~~$4,774.34~~))$4,919.72
Multi-Family 1-2 level	220	dwelling	((~~$4,271.78~~))$4,401.86
Multi-Family 3-10 level	221	dwelling	((~~$3,266.65~~))$3,366.13
ADU	-	dwelling	((~~$3,266.65~~))$3,366.13
Multi Family Low-Income (1-2 level	223	dwelling	((~~$3,852.97~~))$3,970.30
Assisted Living	254	bed	((~~$1,597.89~~))$1,646.55
Continuing Care Retirement Comm	255	dwelling	((~~$1,265.00~~))$1,303.52
Nursing Home	620	bed	((~~$932.10~~))$960.49
Commercial – Services			
Hotel (3 Levels or More)	310	room	((~~$5,617.67~~))$5,788.73
Hotel/Motel	320	room	((~~$4,475.09~~))$4,611.36
Movie Theater	444	sq ft/GFA	((~~$16.21~~))$16.70
Health Club	492	sq ft/GFA	((~~$19.52~~))$20.12
Day Care	565	sq ft/GFA	((~~$39.75~~))$40.96
Bank	912	sq ft/GFA	((~~$43.49~~))$44.82
Commercial – Institutional			
Elementary School	520	sq ft/GFA	((~~$4.36~~))$4.50
Middle School	522	sq ft/GFA	((~~$3.02~~))$3.11
High School	530	sq ft/GFA	((~~$3.61~~))$3.72
University/College	550	ASF	((~~$4.78~~))$4.92
Religious Institute	560	sq ft/GFA	((~~$3.94~~))$4.06
Library	590	sq ft/GFA	((~~26.26~~))$27.06
Hospital	610	sq ft/GFA	((~~$8.89~~))$9.17
Commercial - Administrative Office			
Veterinary Clinic	640	sq ft/GFA	((~~$36.49~~))$37.60
General Office	710	sq ft/GFA	((~~$12.48~~))$12.86
Medical Office / Clinic	720	sq ft/GFA	((~~$27.60~~))$28.44
Office Park	750	sq ft/GFA	((~~$12.40~~))$12.77

Land Use	ITE Land Use Code	Unit of Measure	Fee per Unit
COST PER TRIP			
Commercial - Retail			
Free-Standing Discount Superstore	813	sq ft/GFA	((~~$13.08~~))$13.48
Specialty Retail Center	826	sq ft/GLA	((~~$7.47~~))$7.70
Hardware/Paint Store	816	sq ft/GFA	((~~$13.34~~))$13.75
Nursery/Garden Center	817	sq ft/GFA	((~~$24.34~~))$25.09
Shopping Center	820	sq ft/GLA	((~~$11.16~~))$11.49
Car Sales - New/Used	841	sq ft/GFA	((~~$16.51~~))$17.01
Tire Store	848	Service bay	((~~$14,597.49~~))$15,042.00
Supermarket	850	sq ft/GFA	((~~$28.50~~))$29.37
Convenience Market	851	sq ft/GFA	((~~$64.53~~))$66.50
Pharmacy	881	sq ft/GFA	((~~$20.22~~))$20.84
Furniture Store	890	sq ft/GFA	((~~$1.10~~))$1.14
Quick Lubrication Vehicle Shop	941	Service Bay	((~~$23,779.33~~))$24,503.44
Auto Parts & Service Center	943	sq ft/GFA	((~~$17.88~~))$18.42
Service Station/Minimart/Carwash	853	VFP	((~~$24,573.98~~))$25,322.29
Industrial			
Light Industry/High Technology	110	sq ft/GFA	((~~$10.42~~))$10.73
Heavy Industrial	120	sq ft/GFA	((~~$7.30~~))$7.52
Industrial Park	132	sq ft/GFA	((~~$9.13~~))$9.41
Manufacturing	140	sq ft/GFA	((~~$7.84~~))$8.08
Warehousing	150	sq ft/GFA	((~~$3.44~~))$3.54
Mini-Storage	151	sq ft/GFA	((~~$1.77~~))$1.82
Commercial – Restaurant			
Drinking Establishment	925	sq ft/GFA	((~~$32.64~~))$33.63
Quality Restaurant	931	sq ft/GFA	((~~$31.37~~))$32.32
High Turnover Restaurant	932	sq ft/GFA	((~~$31.73~~))$32.70
Fast Casual	-	sq ft/GFA	((~~$52.81~~))$54.42
Fast Food Restaurant	934	sq ft/GFA	((~~$78.30~~))$80.69
Coffee Shop with Drive-Thru	937	sq ft/GFA	((~~$30.64~~))$31.57

Notes:
Residential uses based on the Institute of Transportation Engineers (ITE) Trip Generation Manual, 11th Edition
Other uses based on the ITE Trip Generation Manual, 9th Edition

Definitions:
VFP- Vehicle Fueling Positions (Maximum number of vehicles that can be fueled simultaneously)

GFA= Gross Floor Area

Single Family Attached (duplex, townhouse) = dwelling units with a common wall between units. Units separated by a ceiling are multi-family.

ASF= Assignable Square Feet (aka Net Assignable Area): the sum of all areas on all floors of a building assigned to, or available for assignment to, an occupant or specific use. It can be subdivided into Classroom, labs, offices, study facilities, special use, general use, support, health care, residential and unclassified. Areas defined

Drinking Establishment = contains a bar, serves alcohol and food, may have TV screens, pool tables, and other entertainment. Restaurants that specialize in food but also have a bar are considered High-Turnover Restaurants.

Quality Restaurant = duration of stay > 1 hour, not a chain, serves dinner and sometimes lunch, patrons wait to be seated, order from menu, pay after (Ex. Clinkerdagger, Anthony's, Luna)

High-Turnover Restaurant = duration of stay approx. 1 hour, often a chain restaurant, may be open 24 hours, patrons wait to be seated, order from menu (Ex. Applebee's, Denny's, Buffalo Wild Wings, The Onion, Twigs)

Fast Casual Restaurant = duration of stay < 1 hour, patrons order at counter and eat in the restaurant. Food is typically made to order. Most do not have a drive-through. (Ex. Chipotle, Panera Bread, Five Guys, Qdoba, Mod Pizza).

Agenda Sheet for City Council:

Committee: PIES **Date:** 11/10/2026

Committee Agenda type: Discussion

Council Meeting Date: 12/09/2026

Date Rec'd	11/6/2026
Clerk's File #	ORD C36978
Cross Ref #	
Project #	
Bid #	
Requisition #	

Submitting Dept	CITY COUNCIL
Contact Name/Phone	KATE TELIS 625-6821
Contact E-Mail	KTELIS@SPOKANECITY.ORG
Agenda Item Type	First Reading Ordinance
Council Sponsor(s)	KTELIS SDIXIT
Sponsoring at Administrators Request	NO
Lease? NO	**Grant Related?** NO **Public Works?** NO
Agenda Item Name	ORDINANCE RELATING TO WATER CONSERVATION

Agenda Wording

An ordinance relating to water conservation in Spokane and strengthening water conservation measures and regulations; adopting a new section 13.04.1926 and repealing section 13.04.1925 of the Spokane Municipal Code.

Summary (Background)

While the City has passed regulations on water usage in the past, the regulations are overly complicated and not enforceable. Achieving meaningful compliance with water conservation requirements requires clear and understandable standards, robust public education, and fair, consistent enforcement. This ordinance simplifies the City's water conservation regulations and calls for the Director of Public Works to propose meaningful enforcement mechanisms within 180 days of its passage.

What impacts would the proposal have on historically excluded communities?

The ordinance could potentially disproportionately impact historically excluded communities who are not as educated in the City's regulations. The ordinance attempts to combat this by requiring the Public Works Department provide education and community engagement to all water rate payers on the importance of complying with the new legal standards for watering outside vegetation and the financial and other benefits to the community.

How will data be collected, analyzed, and reported concerning the effect of the program/policy by racial, ethnic, gender identity, national origin, income level, disability, sexual orientation, or other existing disparities?

Using automatic water meter readers (AMRs) the City can identify which zip codes are using the most water and are most likely to be penalized. The City can target these areas for education before imposing penalties to ensure no area is disproportionately affected.

How will data be collected regarding the effectiveness of this program, policy, or product to ensure it is the right solution?

The City can compare water usage from before and after implementation of this ordinance and the enforcement measures to see if water usage has decreased.

Describe how this proposal aligns with current City Policies, including the Comprehensive Plan, Sustainability Action Plan, Capital Improvement Program, Neighborhood Master Plans, Council Resolutions, and others?

the City of Spokane's Comprehensive Plan, 2021 Sustainability Action Plan, and 2020 Water Conservation Master Plan establishes a goal of accommodating future growth without increasing overall water withdrawals, recognizing that water conservation is essential to meeting future demand while protecting existing water resources.

Council Subcommittee Review

The ordinance was unanimously endorsed by the Climate Resilience and Sustainability Board.

Fiscal Impact	
Approved in Current Year Budget?	
Total Cost	**$**
Current Year Cost	**$**
Subsequent Year(s) Cost	**$**

Narrative

Amount		**Budget Account**
Select	**$**	**#**
Select	**$**	**#**
Select	**$**	**#**
Select	**$**	**#**
Select	**$**	**#**
Select	**$**	**#**

Funding Source

Funding Source Type Select

Is this funding source sustainable for future years, months, etc?

Expense Occurrence	

Other budget impacts (revenue generating, match requirements, etc.)

Approvals		**Additional Approvals**	
Dept Head			
Division Director			
Accounting Manager	ALBIN-MOORE, ANGELA		
Legal	DUGGAN, ANDI		
For the Mayor			

Distribution List

ktelis@spokanecity.org	sdixit@spokanecity.org
agrageda@spokanecity.org	spedinielli@spokanecity.org

ORDINANCE NO. C-36978

An ordinance relating to water conservation in Spokane and strengthening water conservation measures and regulations; adopting a new section 13.04.1926 and repealing section 13.04.1925 of the Spokane Municipal Code.

Whereas, the City of Spokane provides water service to commercial and residential users within the City as well as to users within its water service area, pursuant to RCW 35.92.010; and

Whereas, the City of Spokane's Comprehensive Plan, 2021 Sustainability Action Plan, and 2020 Water Conservation Master Plan establishes a goal of accommodating future growth without increasing overall water withdrawals, recognizing that water conservation is essential to meeting future demand while protecting existing water resources; and

Whereas, while some of the largest commercial water users have made progress in reducing water use over the past two decades, the majority of the City's commercial and residential water users have not met the water reduction goals outlined in the City's 2020 Water Conservation Master Plan; and

Whereas, water use per capita within the City of Spokane has not meaningfully declined since the City adopted Ordinance C36209 outlining voluntary water conservation measures; and

Whereas, the City remains in the top 97th percentile of water use nationwide; and

Whereas, Spokane residents use 5-6 times more water during the summer months than during other times of the year, and outdoor landscape irrigation represents the greatest opportunity for reducing seasonal water demand through efficient water use and elimination of unnecessary water waste; and

Whereas, outdoor irrigation during the hottest hours of the day results in increased evaporative water loss and reduced irrigation efficiency, while irrigation during cooler morning and evening hours allows more water to reach plant roots and reduces unnecessary water waste; and

Whereas, research conducted in 2020 by the Alliance for Water Efficiency shows that voluntary water conservation measures do not result in statistically significant or meaningful water savings; and

Whereas, that same study by the Alliance for Water Efficiency showed up to 42% reductions in water use in jurisdictions with mandatory conservation measures codified into law; and

Whereas, the Cities of Airway Heights, Medical Lake, and Post Falls share the same watershed as the City of Spokane, and they all have mandatory water conservation measures; and

Whereas, reducing outdoor water waste and increasing the efficiency of outdoor water use has the potential to save the City millions of dollars in avoided infrastructure costs since the City currently builds its water storage and delivery systems to peak summertime usage; and

Whereas, the City sources its water exclusively from the Spokane Valley-Rathdrum Prairie (SVRP) Aquifer which has been designated by the United States Environmental Protection Agency as a Sole Source Aquifer because it serves as the principal source of drinking water for the region; and

Whereas, the SVRP Aquifer and the Spokane River are hydrologically connected, with water moving between the aquifer and the river depending on location, season, and hydrologic conditions; and

Whereas, research and data analysis conducted in 2015 documented that the City's groundwater withdrawals and water consumption directly affect flows in the Spokane River, and that water conservation supports both the regional drinking water supply, wildfire mitigation, and the health of the Spokane River; and

Whereas, increases in year-over-year drought and shifts in the type and timing of precipitation are causing increased variability and diminished water quantity across the Spokane River Watershed; and

Whereas, the Spokane River has experienced increasingly frequent periods during which summer streamflows fall below established instream flow levels intended to protect fish, wildlife, recreation, and other instream resources; and

Whereas, the City's municipal water supply relies on water rights that are generally senior to the Spokane River instream flow rule, making water conservation an important tool for supporting instream flows while accommodating municipal water demand; and

Whereas, City of Spokane's peak summertime water demand coincides with the period when flows in the Spokane River are typically at their lowest and aquatic resources are most vulnerable; and

Whereas, protecting the Spokane River is necessary to support fish, wildlife, recreation, and other beneficial uses identified under the Clean Water Act, and essential to the economic vitality, ecological health, and quality of life of the Spokane community; and

Whereas, achieving meaningful compliance with water conservation requirements requires clear and understandable standards, robust public education, accessible reporting mechanisms, and fair, consistent enforcement; and

Whereas, climate change is increasing both the demand for outdoor irrigation and the frequency and duration of periods of low streamflow, making water conservation an increasingly important tool for protecting the Spokane River; and

Whereas, effective water conservation measures should reduce unnecessary water waste while recognizing that certain water uses, including efficient irrigation practices and water use necessary for wildfire preparedness and risk reduction, support broader community goals and should be addressed in a manner consistent with the City's overall conservation objectives; and

Whereas, the City of Spokane has the authority under state law to impose reasonable conditions and restrictions on the access to and use of City water, consistent with the foregoing policies and goals;

NOW THEREFORE, the City of Spokane does ordain:

Section 1. That section 13.04.1925 of the Spokane Municipal Code is repealed.

Section 2. That a new section 13.04.1926 of Chapter 13.04 of the Spokane Municipal Code is adopted to read as follows:

Section 13.04.1926 Water Conservation Measures

A. The City of Spokane shall implement the following conservation measures:

1. Time-of-Day-Restrictions:

   Except as permitted in Subsection B, no person shall water outdoor vegetation or use water for washing outdoor hardscape features, including sidewalks, driveways, decks, patios, and similar surfaces between the hours of 10 am to 6 pm.

2. Irrigation Scheduling Requirements:

   Outdoor landscape irrigation shall be limited as follows:

   a. Outdoor landscape irrigation shall occur no more than three days per week, and only on such days as designated by the Director pursuant to Public Rule.

   b. Outdoor landscape irrigation shall not exceed two hours per designated watering day per parcel for standard spray or high-flow irrigation systems or four hours per designated watering day for low-flow irrigation systems or hand watering.

B. Exceptions to Irrigation Scheduling Requirement:

1. The Parks and Recreation Division ("Parks") shall continue its efforts to upgrade park infrastructure as funding becomes available to comply with the above restrictions. Parks shall be exempt from these measures when the Parks Director informs the Mayor and City Council in writing that an exemption is necessary for the purposes of watering trees, watering the remaining parks with non-automated irrigation systems, allowing for the establishment of newly planted landscape, mitigating fire risk in wildland-urban interface areas, operating pools and splashpads, and operating sports program facilities. The exemptions permitted under this subsection shall expire March 30, 2032.

2. Pursuant to a Public Rule adopted under Chapter 3.14, the following circumstances constitute exceptions to the restrictions in this Section:

    a. Hand watering community/personal vegetable gardens,

    b. Watering trees located either within the public right-of-way or on private property,

    c. Watering to allow for the establishment of newly planted landscape, or

    d. Watering as reasonably necessary to mitigate wildfire risk.

C. Emergency Water Shortage Authority:

Consistent with the general authority under SMC 02.04.030, the Mayor may declare a water emergency and impose additional restrictions on the use of water from the City's water system for irrigation and outside watering. Such declaration shall be approved, modified or rejected by the City Council as provided in SMC 02.04.060, and may include:

1. Restrictions on the hours, type, and location of water usage and allow disconnection of users who fail to comply with restrictions, subject to limitations under state law.

2. Any restrictions implemented under this authority shall also apply to intertie agreements pursuant to SMC 13.045.030(H)-(I).

D. Enforcement and Penalties:

Within 180 days after the effective date of this section, the Director shall submit a report to the Mayor and City Council with proposed enforcement mechanisms and penalties for any person, firm, institution, or corporation who violates the provisions of this section. The first phase of enforcement shall be commercial enforcement

beginning June 1, 2027, and residential enforcement shall begin no later than June 1, 2028. The proposed enforcement mechanisms and penalties may include an option for waivers of penalties or fees based on stated criteria issued by the Director.

E. The Department shall provide education and community engagement to all water rate payers within the city's retail water delivery area on the importance of complying with the new legal standards for watering outside vegetation and the financial and other benefits to the community.

Section 3. Severability. If any section, subsection, sentence, clause, phrase or word of this ordinance should be held to be invalid or unconstitutional by a court of competent jurisdiction, such invalidity or unconstitutionality thereof shall not affect the validity or constitutionality of any other section, subsection, sentence, clause, phrase or word of this ordinance.

Section 4. Clerical Errors. Upon approval by the city attorney, the city clerk is authorized to make necessary corrections to this ordinance, including scrivener's errors or clerical mistakes; references to other local, state, or federal laws, rules, or regulations; or numbering or referencing of ordinances or their sections and subsections.

PASSED by the City Council on _____.

_____
Council President

Attest:

Approved as to Form

_____
City Clerk

_____
Assistant City Attorney

_____
Mayor

_____
Date

_____
Effective Date

PURPOSE OF THE AMENDMENT: If adopted, this amendment would (1) remove the Public Rule language from the Exceptions to Irrigation Scheduling Requirement subsection of the ordinance, (2) add incentive language to the Enforcement and Penalties subsection of the ordinance, and (3) add Public Rule language to the Incentives, Enforcement and Penalties subsection of the ordinance.

Strike Section 2 of the Ordinance in its entirety and substitute the following in its place:

Section 2. That a new section 13.04.1926 of Chapter 13.04 of the Spokane Municipal Code is adopted to read as follows:

Section 13.04.1926 Water Conservation Measures

A. The City of Spokane shall implement the following conservation measures:

1. Time-of-Day-Restrictions:

Except as permitted in Subsection B, no person shall water outdoor vegetation or use water for washing outdoor hardscape features, including sidewalks, driveways, decks, patios, and similar surfaces between the hours of 10 am to 6 pm.

2. Irrigation Scheduling Requirements:

Outdoor landscape irrigation shall be limited as follows:

a. Outdoor landscape irrigation shall occur no more than three days per week, and only on such days as designated by the Director pursuant to Public Rule.

b. Outdoor landscape irrigation shall not exceed two hours per designated watering day per parcel for standard spray or high-flow irrigation systems or four hours per designated watering day for low-flow irrigation systems or hand watering.

B. Exceptions to Irrigation Scheduling Requirement:

1. The Parks and Recreation Division (“Parks”) shall continue its efforts to upgrade park infrastructure as funding becomes available to comply with the above restrictions. Parks shall be exempt from these measures when the Parks Director informs the Mayor and City Council in writing that an exemption is necessary for the purposes of watering trees, watering the remaining parks with non-automated irrigation systems, allowing for the establishment of newly planted landscape, mitigating fire risk in wildland-urban interface areas, operating pools and splashpads, and operating sports program facilities. The exemptions permitted under this subsection shall expire March 30, 2032.

2. ((~~Pursuant to a Public Rule adopted under Chapter 3.14, t~~))The following circumstances constitute exceptions to the restrictions in this Section:

a. Hand watering community/personal vegetable gardens,

b. Watering trees located either within the public right-of-way or on private property,

c. Watering to allow for the establishment of newly planted landscape, or

d. Watering as reasonably necessary to mitigate wildfire risk.

C. Emergency Water Shortage Authority:

Consistent with the general authority under SMC 02.04.030, the Mayor may declare a water emergency and impose additional restrictions on the use of water from the City's water system for irrigation and outside watering. Such declaration shall be approved, modified or rejected by the City Council as provided in SMC 02.04.060, and may include:

1. Restrictions on the hours, type, and location of water usage and allow disconnection of users who fail to comply with restrictions, subject to limitations under state law.

2. Any restrictions implemented under this authority shall also apply to intertie agreements pursuant to SMC 13.045.030(H)-(I).

D. Incentives, Enforcement and Penalties:

Within 180 days after the effective date of this section, the Director shall submit a report to the Mayor and City Council with proposed incentives, enforcement mechanisms and penalties for any person, firm, institution, or corporation who violates the provisions of this section. The first phase of enforcement shall be commercial enforcement beginning June 1, 2027, and residential enforcement shall begin no later than June 1, 2028. The proposed enforcement mechanisms and penalties, as well as any incentives, shall be adopted by Public Rule pursuant to Chapter 3.14 of the municipal code, and may include an option for waivers of penalties or fees, and incentives for compliance, based on ((~~stated~~))criteria set forth in the Public Rule((~~issued by the Director~~)).

E. The Department shall provide education and community engagement to all water rate payers within the city's retail water delivery area on the importance of complying with the new legal standards for watering outside vegetation and the financial and other benefits to the community.

Section 3. Severability. If any section, subsection, sentence, clause, phrase or word of this ordinance should be held to be invalid or unconstitutional by a court of competent jurisdiction, such invalidity or unconstitutionality thereof shall not affect the validity or constitutionality of any other section, subsection, sentence, clause, phrase or word of this ordinance.

Section 4. Clerical Errors. Upon approval by the city attorney, the city clerk is authorized to make necessary corrections to this ordinance, including scrivener's errors

or clerical mistakes; references to other local, state, or federal laws, rules, or regulations; or numbering or referencing of ordinances or their sections and subsections.

PASSED by the City Council on _____.

_____
Council President

Attest:

Approved as to Form

_____
City Clerk

_____
Assistant City Attorney

_____
Mayor

_____
Date

_____
Effective Date

Agenda Sheet for City Council:

Committee: Public Safety **Date:** 11/05/2026

Committee Agenda type: Reports, Contracts & Claims

Council Meeting Date: 12/02/2026

Date Rec'd	10/28/2026		
Clerk's File #	OPR 2026-0934		
Cross Ref #			
Project #			
Submitting Dept	FIRE	**Bid #**	
Contact Name/Phone	KYLE CHASE 509-625-7080	**Requisition #**	
Contact E-Mail	KCCHASE@SPOKANECITY.ORG		
Agenda Item Type	Purchase w/o Contract		
Council Sponsor(s)	MCATHCART KTELIS		
Sponsoring at Administrators Request	NO		
Lease? NO	**Grant Related?** NO	**Public Works?** NO	
Agenda Item Name	APPROVAL TO PURCHASE THREE BRUSH TRUCKS		

Agenda Wording

Approval to purchase three (3) new Wildland Brush Trucks from Ridgehound Emergency Vehicles.

Summary (Background)

SFD possesses an aging fleet of wildland brush truck, with 5 current units being 22 years old. These units need to be replaced due to functionality and reliability issues. SFD is looking to purchase 3 new wildland brush trucks that can consistently provide fire suppression and increased capabilities in the City's wildland/urban interface area.

What impacts would the proposal have on historically excluded communities?

Not applicable – This request for approval is for apparatus purchase.

How will data be collected, analyzed, and reported concerning the effect of the program/policy by racial, ethnic, gender identity, national origin, income level, disability, sexual orientation, or other existing disparities?

Not applicable – This request for approval is for apparatus purchase.

How will data be collected regarding the effectiveness of this program, policy, or product to ensure it is the right solution?

Not applicable – This request for approval is for apparatus purchase.

Describe how this proposal aligns with current City Policies, including the Comprehensive Plan, Sustainability Action Plan, Capital Improvement Program, Neighborhood Master Plans, Council Resolutions, and others?

This proposal aligns with the SFD Capital Improvement Plan, FD Strategic Plan Goal #7, provide a high state of readiness of apparatus and equipment to ensure response to the needs of our customers in a safe and efficient manner. This apparatus meet the Sustainability Action Plan by having a clean diesel motor with lowered emission. Additionally, SFD used prexisting Government contracts to ensure lowest cost.

Council Subcommittee Review

N/A

Fiscal Impact

Approved in Current Year Budget?	YES
Total Cost	$ 1100752.46
Current Year Cost	$ 1100752.46
Subsequent Year(s) Cost	$ 0.00

Narrative

SFD seeks to purchase three (3) new Wildland Brush Trucks from Ridgehound Emergency Vehicles which will provide reliable fire suppression and increased capabilities. Funds from the Community Safety Sales Tax.

Amount		Budget Account
Expense	$ 1100752.46	# 5903.79126.94220.56404.99999
Select	$	#
Select	$	#
Select	$	#
Select	$	#
Select	$	#

Funding Source	One-Time
Funding Source Type	Taxes

Is this funding source sustainable for future years, months, etc?

Expense Occurrence	One-Time

Other budget impacts (revenue generating, match requirements, etc.)

Approvals		Additional Approvals	
Dept Head	JDEESE	PS EXEC REVIEW	JDEESE
Division Director	JDEESE		
Accounting Manager	JDEESE		
Legal	JDEESE		
For the Mayor	JDEESE		

Distribution List

Jordan Koffler jkoffler@ridgehoundfire.com	tmwilliams@spokanecity.org
kahaack@spokanecity.org	kcchase@spokanecity.org
tprince@spokanecity.org	escott@spokanecity.org
jrengifo@spokanecity.org	fireaccounting@spokanecity.org

Washington State Department of Revenue

Business Lookup

License Information:

New search Back to results

Entity name: CASCADE FIRE EQUIPMENT, LLC

Business name: CASCADE FIRE EQUIPMENT CORP

Entity type: Limited Liability Company

UBI #: 397-012-454

Business ID: 001

Location ID: 0001

Location: Active

Location address: 123 S FRONT ST
YAKIMA WA 98901-2817

Mailing address: 123 S FRONT ST
YAKIMA WA 98901-2817

Excise tax and reseller permit status: Click here

Secretary of State information: Click here

Endorsements

Endorsements held a	License #	Count	Details	Status	Expiratio	First issua

Endorsements held a	License #	Count	Details	Status	Expiratio	First issua
Motor Vehicle Dealer	08957		View Plates	On Hold	Oct-31-2(	Apr-20-2(
Yakima General Business	BL015125			Active	Oct-31-2(	Jan-06-2(

Owners and officers on file with the Department of Revenue

Owners and officers	Title
SEAWESTERN HOLDINGS INC	

Registered Trade Names

Registered trade names	Status	First issued
CASCADE FIRE & SAFETY	Active	Dec-09-2008
RIDGEHOUND EMERGENCY VEHICLES	Active	Sep-24-2026
SEAWESTERN EMERGENCY VEHICLES	Active	Apr-22-2024
SEAWESTERN EMERGENCY VEHICLES INC	Active	Apr-23-2024

The Business Lookup information is updated nightly. Search date and time: 10/14/2026 4:31:30 PM

Contact us

How are we doing?
Take our survey!

Don't see what you expected?
Check if your browser is supported

Taxes & Licenses Department
808 W Spokane Falls Blvd
Spokane WA 99201-3336
509-625-6070
taxesandlicenses@spokanecity.org

Business License Exemption Request Form

SMC 8.01.070 states that no person may engage in business in the City or "with the City" without first having obtained a Washington State business license with City of Spokane endorsement.

Spokane Municipal Code allows for business license exemption for certain limited activities. If you think your business is exempt, please fill out this form, sign and submit it to the Taxes and License department. Submissions can be accepted via email or physical mail to the contact information identified above.

Select the exemption(s) that apply:

- ☐ **SMC 08.01.090 -A-** presenters at convention or trade show with limited entry
- ☐ **SMC 08.01.090 -C-** persons or entities operating at locations managed by an airport board
- ☐ **SMC 08.01.090 -D-** where preempted by Federal or state constitution or laws
- ☐ **SMC 08.01.090 -E-** exemption for farmers & gardeners
- ☐ **SMC 08.01.090 -F-** school groups conducting occasional sale from a temporary location
- ☐ **SMC 08.01.090 -G-** The business does not have contracts with the City in any calendar year with an accumulated value exceeding $12,000
  Value of current contract:
- ☑ **SMC 08.01.195 -D-** seller outside of the City delivering goods by means of common carrier
  Goods: Fire Apparatus **Carrier:** SFD Pick-up

CERTIFICATION OF BUSINESS ACTIVITIES

I, Jordan Koffler hereby do certify to the City of Spokane that the business I represent, known as Ridgehound Emergency Vehicles does not conduct nor solicit business activities within the City of Spokane, except for the business activities under the above identified exemptions.

Signature Jordan M Koffler Title Director of Operations

Email jkoffler@ridgehoundfire.com Phone (509) 453-6527

Address 123 S. FRONT STREET City, State, Zip YAKIMA, WA 98901

Date 10/12/2026 UBI# 397-012-454
(Washington State, if available)

For Internal Use Only

Approved ☑ Rejected ☐

If rejected, provide reason:

Reviewed By: Renee Robertson Date: 10-14-26

Approved: Matt Boston
Approved as to form: Elizabeth Schoedel, Asst. City Attorney

DocuSign Envelope ID: AFBF1B44-DC37-48E9-9B89-77FE3F1FD584

Solicitation Number: #020124

CONTRACT

This Contract is between Sourcewell, 202 12th Street Northeast, P.O. Box 219, Staples, MN 56479 (Sourcewell) and Sea-Western Inc., 12815 NE 124th St., Suite H, Kirkland, WA 98034 (Supplier).

Sourcewell is a State of Minnesota local government unit and service cooperative created under the laws of the State of Minnesota (Minnesota Statutes Section 123A.21) that offers cooperative procurement solutions to government entities. Participation is open to eligible federal, state/province, and municipal governmental entities, higher education, K-12 education, nonprofit, tribal government, and other public entities located in the United States and Canada. Sourcewell issued a public solicitation for Firefighting Equipment and Rescue Tools with Related Supplies and Accessories from which Supplier was awarded a contract.

Supplier desires to contract with Sourcewell to provide equipment, products, or services to Sourcewell and the entities that access Sourcewell's cooperative purchasing contracts (Participating Entities).

1. TERM OF CONTRACT

A. EFFECTIVE DATE. This Contract is effective upon the date of the final signature below.

EXPIRATION DATE AND EXTENSION. This Contract expires April 4, 2028, unless it is cancelled sooner pursuant to Article 22. This Contract allows up to three additional one-year extensions upon the request of Sourcewell and written agreement by Supplier. Sourcewell retains the right to consider additional extensions beyond seven years as required under exceptional circumstances.

B. SURVIVAL OF TERMS. Notwithstanding any expiration or termination of this Contract, all payment obligations incurred prior to expiration or termination will survive, as will the following: Articles 11 through 14 survive the expiration or cancellation of this Contract. All other rights will cease upon expiration or termination of this Contract.

2. EQUIPMENT, PRODUCTS, OR SERVICES

DocuSign Envelope ID: AFBF1B44-DC37-48E9-9B89-77FE3F1FD584

A. EQUIPMENT, PRODUCTS, OR SERVICES. Supplier will provide the Equipment, Products, or Services as stated in its Proposal submitted under the Solicitation Number listed above. Supplier's Equipment, Products, or Services Proposal (Proposal) is attached and incorporated into this Contract.

All Equipment and Products provided under this Contract must be new and the current model. Supplier may offer close-out or refurbished Equipment or Products if they are clearly indicated in Supplier's product and pricing list. Unless agreed to by the Participating Entities in advance, Equipment or Products must be delivered as operational to the Participating Entity's site.

This Contract offers an indefinite quantity of sales, and while substantial volume is anticipated, sales and sales volume are not guaranteed.

B. WARRANTY. Supplier warrants that all Equipment, Products, and Services furnished are free from liens and encumbrances, and are free from defects in design, materials, and workmanship. In addition, Supplier warrants the Equipment, Products, and Services are suitable for and will perform in accordance with the ordinary use for which they are intended. Supplier's dealers and distributors must agree to assist the Participating Entity in reaching a resolution in any dispute over warranty terms with the manufacturer. Any manufacturer's warranty that extends beyond the expiration of the Supplier's warranty will be passed on to the Participating Entity.

C. DEALERS, DISTRIBUTORS, AND/OR RESELLERS. Upon Contract execution and throughout the Contract term, Supplier must provide to Sourcewell a current means to validate or authenticate Supplier's authorized dealers, distributors, or resellers relative to the Equipment, Products, and Services offered under this Contract, which will be incorporated into this Contract by reference. It is the Supplier's responsibility to ensure Sourcewell receives the most current information.

3. PRICING

All Equipment, Products, or Services under this Contract will be priced at or below the price stated in Supplier's Proposal.

When providing pricing quotes to Participating Entities, all pricing quoted must reflect a Participating Entity's total cost of acquisition. This means that the quoted cost is for delivered Equipment, Products, and Services that are operational for their intended purpose, and includes all costs to the Participating Entity's requested delivery location.

Regardless of the payment method chosen by the Participating Entity, the total cost associated with any purchase option of the Equipment, Products, or Services must always be disclosed in the pricing quote to the applicable Participating Entity at the time of purchase.

DocuSign Envelope ID: AFBF1B44-DC37-48E9-9B89-77FE3F1FD584

A. SHIPPING AND SHIPPING COSTS. All delivered Equipment and Products must be properly packaged. Damaged Equipment and Products may be rejected. If the damage is not readily apparent at the time of delivery, Supplier must permit the Equipment and Products to be returned within a reasonable time at no cost to Sourcewell or its Participating Entities. Participating Entities reserve the right to inspect the Equipment and Products at a reasonable time after delivery where circumstances or conditions prevent effective inspection of the Equipment and Products at the time of delivery. In the event of the delivery of nonconforming Equipment and Products, the Participating Entity will notify the Supplier as soon as possible and the Supplier will replace nonconforming Equipment and Products with conforming Equipment and Products that are acceptable to the Participating Entity.

Supplier must arrange for and pay for the return shipment on Equipment and Products that arrive in a defective or inoperable condition.

Sourcewell may declare the Supplier in breach of this Contract if the Supplier intentionally delivers substandard or inferior Equipment or Products.

B. SALES TAX. Each Participating Entity is responsible for supplying the Supplier with valid tax-exemption certification(s). When ordering, a Participating Entity must indicate if it is a tax-exempt entity.

C. HOT LIST PRICING. At any time during this Contract, Supplier may offer a specific selection of Equipment, Products, or Services at discounts greater than those listed in the Contract. When Supplier determines it will offer Hot List Pricing, it must be submitted electronically to Sourcewell in a line-item format. Equipment, Products, or Services may be added or removed from the Hot List at any time through a Sourcewell Price and Product Change Form as defined in Article 4 below.

Hot List program and pricing may also be used to discount and liquidate close-out and discontinued Equipment and Products as long as those close-out and discontinued items are clearly identified as such. Current ordering process and administrative fees apply. Hot List Pricing must be published and made available to all Participating Entities.

4. PRODUCT AND PRICING CHANGE REQUESTS

Supplier may request Equipment, Product, or Service changes, additions, or deletions at any time. All requests must be made in writing by submitting a signed Sourcewell Price and Product Change Request Form to the assigned Sourcewell Supplier Development Administrator. This approved form is available from the assigned Sourcewell Supplier Development Administrator. At a minimum, the request must:

- Identify the applicable Sourcewell contract number;

DocuSign Envelope ID: AFBF1B44-DC37-48E9-9B89-77FE3F1FD584

- Clearly specify the requested change;
- Provide sufficient detail to justify the requested change;
- Individually list all Equipment, Products, or Services affected by the requested change, along with the requested change (e.g., addition, deletion, price change); and
- Include a complete restatement of pricing documentation in Microsoft Excel with the effective date of the modified pricing, or product addition or deletion. The new pricing restatement must include all Equipment, Products, and Services offered, even for those items where pricing remains unchanged.

A fully executed Sourcewell Price and Product Change Request Form will become an amendment to this Contract and will be incorporated by reference.

5. PARTICIPATION, CONTRACT ACCESS, AND PARTICIPATING ENTITY REQUIREMENTS

A. PARTICIPATION. Sourcewell's cooperative contracts are available and open to public and nonprofit entities across the United States and Canada; such as federal, state/province, municipal, K-12 and higher education, tribal government, and other public entities.

The benefits of this Contract should be available to all Participating Entities that can legally access the Equipment, Products, or Services under this Contract. A Participating Entity's authority to access this Contract is determined through its cooperative purchasing, interlocal, or joint powers laws. Any entity accessing benefits of this Contract will be considered a Service Member of Sourcewell during such time of access. Supplier understands that a Participating Entity's use of this Contract is at the Participating Entity's sole convenience and Participating Entities reserve the right to obtain like Equipment, Products, or Services from any other source.

Supplier is responsible for familiarizing its sales and service forces with Sourcewell contract use eligibility requirements and documentation and will encourage potential participating entities to join Sourcewell. Sourcewell reserves the right to add and remove Participating Entities to its roster during the term of this Contract.

B. PUBLIC FACILITIES. Supplier's employees may be required to perform work at government-owned facilities, including schools. Supplier's employees and agents must conduct themselves in a professional manner while on the premises, and in accordance with Participating Entity policies and procedures, and all applicable laws.

6. PARTICIPATING ENTITY USE AND PURCHASING

A. ORDERS AND PAYMENT. To access the contracted Equipment, Products, or Services under this Contract, a Participating Entity must clearly indicate to Supplier that it intends to access this Contract; however, order flow and procedure will be developed jointly between Sourcewell and Supplier. Typically, a Participating Entity will issue an order directly to Supplier or its authorized

DocuSign Envelope ID: AFBF1B44-DC37-48E9-9B89-77FE3F1FD584

subsidiary, distributor, dealer, or reseller. If a Participating Entity issues a purchase order, it may use its own forms, but the purchase order should clearly note the applicable Sourcewell contract number. All Participating Entity orders under this Contract must be issued prior to expiration or cancellation of this Contract; however, Supplier performance, Participating Entity payment obligations, and any applicable warranty periods or other Supplier or Participating Entity obligations may extend beyond the term of this Contract.

Supplier's acceptable forms of payment are included in its attached Proposal. Participating Entities will be solely responsible for payment and Sourcewell will have no liability for any unpaid invoice of any Participating Entity.

B. ADDITIONAL TERMS AND CONDITIONS/PARTICIPATING ADDENDUM. Additional terms and conditions to a purchase order, or other required transaction documentation, may be negotiated between a Participating Entity and Supplier, such as job or industry-specific requirements, legal requirements (e.g., affirmative action or immigration status requirements), or specific local policy requirements. Some Participating Entities may require the use of a Participating Addendum, the terms of which will be negotiated directly between the Participating Entity and the Supplier or its authorized dealers, distributors, or resellers, as applicable. Any negotiated additional terms and conditions must never be less favorable to the Participating Entity than what is contained in this Contract.

C. SPECIALIZED SERVICE REQUIREMENTS. In the event that the Participating Entity requires service or specialized performance requirements not addressed in this Contract (such as e-commerce specifications, specialized delivery requirements, or other specifications and requirements), the Participating Entity and the Supplier may enter into a separate, standalone agreement, apart from this Contract. Sourcewell, including its agents and employees, will not be made a party to a claim for breach of such agreement.

D. TERMINATION OF ORDERS. Participating Entities may terminate an order, in whole or in part, immediately upon notice to Supplier in the event of any of the following events:

1. The Participating Entity fails to receive funding or appropriation from its governing body at levels sufficient to pay for the equipment, products, or services to be purchased; or
2. Federal, state, or provincial laws or regulations prohibit the purchase or change the Participating Entity's requirements.

E. GOVERNING LAW AND VENUE. The governing law and venue for any action related to a Participating Entity's order will be determined by the Participating Entity making the purchase.

7. CUSTOMER SERVICE

DocuSign Envelope ID: AFBF1B44-DC37-48E9-9B89-77FE3F1FD584

A. PRIMARY ACCOUNT REPRESENTATIVE. Supplier will assign an Account Representative to Sourcewell for this Contract and must provide prompt notice to Sourcewell if that person is changed. The Account Representative will be responsible for:

- Maintenance and management of this Contract;
- Timely response to all Sourcewell and Participating Entity inquiries; and
- Business reviews to Sourcewell and Participating Entities, if applicable.

B. BUSINESS REVIEWS. Supplier must perform a minimum of one business review with Sourcewell per contract year. The business review will cover sales to Participating Entities, pricing and contract terms, administrative fees, sales data reports, performance issues, supply issues, customer issues, and any other necessary information.

8. REPORT ON CONTRACT SALES ACTIVITY AND ADMINISTRATIVE FEE PAYMENT

A. CONTRACT SALES ACTIVITY REPORT. Each calendar quarter, Supplier must provide a contract sales activity report (Report) to the Sourcewell Supplier Development Administrator assigned to this Contract. Reports are due no later than 45 days after the end of each calendar quarter. A Report must be provided regardless of the number or amount of sales during that quarter (i.e., if there are no sales, Supplier must submit a report indicating no sales were made).

The Report must contain the following fields:

- Participating Entity Name (e.g., City of Staples Highway Department);
- Participating Entity Physical Street Address;
- Participating Entity City;
- Participating Entity State/Province;
- Participating Entity Zip/Postal Code;
- Participating Entity Contact Name;
- Participating Entity Contact Email Address;
- Participating Entity Contact Telephone Number;
- Sourcewell Assigned Entity/Participating Entity Number;
- Item Purchased Description;
- Item Purchased Price;
- Sourcewell Administrative Fee Applied; and
- Date Purchase was invoiced/sale was recognized as revenue by Supplier.

B. ADMINISTRATIVE FEE. In consideration for the support and services provided by Sourcewell, the Supplier will pay an administrative fee to Sourcewell on all Equipment, Products, and Services provided to Participating Entities. The Administrative Fee must be included in, and not added to, the pricing. Supplier may not charge Participating Entities more than the contracted

DocuSign Envelope ID: AFBF1B44-DC37-48E9-9B89-77FE3F1FD584

price to offset the Administrative Fee.

The Supplier will submit payment to Sourcewell for the percentage of administrative fee stated in the Proposal multiplied by the total sales of all Equipment, Products, and Services purchased by Participating Entities under this Contract during each calendar quarter. Payments should note the Supplier's name and Sourcewell-assigned contract number in the memo; and must be mailed to the address above "Attn: Accounts Receivable" or remitted electronically to Sourcewell's banking institution per Sourcewell's Finance department instructions. Payments must be received no later than 45 calendar days after the end of each calendar quarter.

Supplier agrees to cooperate with Sourcewell in auditing transactions under this Contract to ensure that the administrative fee is paid on all items purchased under this Contract.

In the event the Supplier is delinquent in any undisputed administrative fees, Sourcewell reserves the right to cancel this Contract and reject any proposal submitted by the Supplier in any subsequent solicitation. In the event this Contract is cancelled by either party prior to the Contract's expiration date, the administrative fee payment will be due no more than 30 days from the cancellation date.

9. AUTHORIZED REPRESENTATIVE

Sourcewell's Authorized Representative is its Chief Procurement Officer.

Supplier's Authorized Representative is the person named in the Supplier's Proposal. If Supplier's Authorized Representative changes at any time during this Contract, Supplier must promptly notify Sourcewell in writing.

10. AUDIT, ASSIGNMENT, AMENDMENTS, WAIVER, AND CONTRACT COMPLETE

A. AUDIT. Pursuant to Minnesota Statutes Section 16C.05, subdivision 5, the books, records, documents, and accounting procedures and practices relevant to this Contract are subject to examination by Sourcewell or the Minnesota State Auditor for a minimum of six years from the end of this Contract. This clause extends to Participating Entities as it relates to business conducted by that Participating Entity under this Contract.

B. ASSIGNMENT. Neither party may assign or otherwise transfer its rights or obligations under this Contract without the prior written consent of the other party and a fully executed assignment agreement. Such consent will not be unreasonably withheld. Any prohibited assignment will be invalid.

C. AMENDMENTS. Any amendment to this Contract must be in writing and will not be effective until it has been duly executed by the parties.

DocuSign Envelope ID: AFBF1B44-DC37-48E9-9B89-77FE3F1FD584

D. WAIVER. Failure by either party to take action or assert any right under this Contract will not be deemed a waiver of such right in the event of the continuation or repetition of the circumstances giving rise to such right. Any such waiver must be in writing and signed by the parties.

E. CONTRACT COMPLETE. This Contract represents the complete agreement between the parties. No other understanding regarding this Contract, whether written or oral, may be used to bind either party. For any conflict between the attached Proposal and the terms set out in Articles 1-22 of this Contract, the terms of Articles 1-22 will govern.

F. RELATIONSHIP OF THE PARTIES. The relationship of the parties is one of independent contractors, each free to exercise judgment and discretion with regard to the conduct of their respective businesses. This Contract does not create a partnership, joint venture, or any other relationship such as master-servant, or principal-agent.

11. INDEMNITY AND HOLD HARMLESS

Supplier must indemnify, defend, save, and hold Sourcewell and its Participating Entities, including their agents and employees, harmless from any claims or causes of action, including attorneys' fees incurred by Sourcewell or its Participating Entities, arising out of any act or omission in the performance of this Contract by the Supplier or its agents or employees; this indemnification includes injury or death to person(s) or property alleged to have been caused by some defect in the Equipment, Products, or Services under this Contract to the extent the Equipment, Product, or Service has been used according to its specifications. Sourcewell's responsibility will be governed by the State of Minnesota's Tort Liability Act (Minnesota Statutes Chapter 466) and other applicable law.

12. GOVERNMENT DATA PRACTICES

Supplier and Sourcewell must comply with the Minnesota Government Data Practices Act, Minnesota Statutes Chapter 13, as it applies to all data provided by or provided to Sourcewell under this Contract and as it applies to all data created, collected, received, maintained, or disseminated by the Supplier under this Contract.

13. INTELLECTUAL PROPERTY, PUBLICITY, MARKETING, AND ENDORSEMENT

A. INTELLECTUAL PROPERTY

1. *Grant of License.* During the term of this Contract:

    a. Sourcewell grants to Supplier a royalty-free, worldwide, non-exclusive right and license to use the trademark(s) provided to Supplier by Sourcewell in advertising and promotional materials for the purpose of marketing Sourcewell's relationship with Supplier.

DocuSign Envelope ID: AFBF1B44-DC37-48E9-9B89-77FE3F1FD584

b. Supplier grants to Sourcewell a royalty-free, worldwide, non-exclusive right and license to use Supplier's trademarks in advertising and promotional materials for the purpose of marketing Supplier's relationship with Sourcewell.

2. *Limited Right of Sublicense*. The right and license granted herein includes a limited right of each party to grant sublicenses to their respective subsidiaries, distributors, dealers, resellers, marketing representatives, and agents (collectively "Permitted Sublicensees") in advertising and promotional materials for the purpose of marketing the Parties' relationship to Participating Entities. Any sublicense granted will be subject to the terms and conditions of this Article. Each party will be responsible for any breach of this Article by any of their respective sublicensees.

3. *Use; Quality Control.*

a. Neither party may alter the other party's trademarks from the form provided and must comply with removal requests as to specific uses of its trademarks or logos.

b. Each party agrees to use, and to cause its Permitted Sublicensees to use, the other party's trademarks only in good faith and in a dignified manner consistent with such party's use of the trademarks. Upon written notice to the breaching party, the breaching party has 30 days of the date of the written notice to cure the breach or the license will be terminated.

4. *Termination*. Upon the termination of this Contract for any reason, each party, including Permitted Sublicensees, will have 30 days to remove all Trademarks from signage, websites, and the like bearing the other party's name or logo (excepting Sourcewell's pre-printed catalog of suppliers which may be used until the next printing). Supplier must return all marketing and promotional materials, including signage, provided by Sourcewell, or dispose of it according to Sourcewell's written directions.

B. PUBLICITY. Any publicity regarding the subject matter of this Contract must not be released without prior written approval from the Authorized Representatives. Publicity includes notices, informational pamphlets, press releases, research, reports, signs, and similar public notices prepared by or for the Supplier individually or jointly with others, or any subcontractors, with respect to the program, publications, or services provided resulting from this Contract.

C. MARKETING. Any direct advertising, marketing, or offers with Participating Entities must be approved by Sourcewell. Send all approval requests to the Sourcewell Supplier Development Administrator assigned to this Contract.

D. ENDORSEMENT. The Supplier must not claim that Sourcewell endorses its Equipment, Products, or Services.

DocuSign Envelope ID: AFBF1B44-DC37-48E9-9B89-77FE3F1FD584

14. GOVERNING LAW, JURISDICTION, AND VENUE

The substantive and procedural laws of the State of Minnesota will govern this Contract. Venue for all legal proceedings arising out of this Contract, or its breach, must be in the appropriate state court in Todd County, Minnesota or federal court in Fergus Falls, Minnesota.

15. FORCE MAJEURE

Neither party to this Contract will be held responsible for delay or default caused by acts of God or other conditions that are beyond that party's reasonable control. A party defaulting under this provision must provide the other party prompt written notice of the default.

16. SEVERABILITY

If any provision of this Contract is found by a court of competent jurisdiction to be illegal, unenforceable, or void then both parties will be relieved from all obligations arising from that provision. If the remainder of this Contract is capable of being performed, it will not be affected by such determination or finding and must be fully performed.

17. PERFORMANCE, DEFAULT, AND REMEDIES

A. PERFORMANCE. During the term of this Contract, the parties will monitor performance and address unresolved contract issues as follows:

1. *Notification.* The parties must promptly notify each other of any known dispute and work in good faith to resolve such dispute within a reasonable period of time. If necessary, Sourcewell and the Supplier will jointly develop a short briefing document that describes the issue(s), relevant impact, and positions of both parties.
2. *Escalation.* If parties are unable to resolve the issue in a timely manner, as specified above, either Sourcewell or Supplier may escalate the resolution of the issue to a higher level of management. The Supplier will have 30 calendar days to cure an outstanding issue.
3. *Performance while Dispute is Pending*. Notwithstanding the existence of a dispute, the Supplier must continue without delay to carry out all of its responsibilities under the Contract that are not affected by the dispute. If the Supplier fails to continue without delay to perform its responsibilities under the Contract, in the accomplishment of all undisputed work, the Supplier will bear any additional costs incurred by Sourcewell and/or its Participating Entities as a result of such failure to proceed.

B. DEFAULT AND REMEDIES. Either of the following constitutes cause to declare this Contract, or any Participating Entity order under this Contract, in default:

1. Nonperformance of contractual requirements, or
2. A material breach of any term or condition of this Contract.

DocuSign Envelope ID: AFBF1B44-DC37-48E9-9B89-77FE3F1FD584

The party claiming default must provide written notice of the default, with 30 calendar days to cure the default. Time allowed for cure will not diminish or eliminate any liability for liquidated or other damages. If the default remains after the opportunity for cure, the non-defaulting party may:

- Exercise any remedy provided by law or equity, or
- Terminate the Contract or any portion thereof, including any orders issued against the Contract.

18. INSURANCE

A. REQUIREMENTS. At its own expense, Supplier must maintain insurance policy(ies) in effect at all times during the performance of this Contract with insurance company(ies) licensed or authorized to do business in the State of Minnesota having an "AM BEST" rating of A- or better, with coverage and limits of insurance not less than the following:

1. *Workers' Compensation and Employer's Liability.*
Workers' Compensation: As required by any applicable law or regulation.
Employer's Liability Insurance: must be provided in amounts not less than listed below:
Minimum limits:
$500,000 each accident for bodily injury by accident
$500,000 policy limit for bodily injury by disease
$500,000 each employee for bodily injury by disease

2. *Commercial General Liability Insurance.* Supplier will maintain insurance covering its operations, with coverage on an occurrence basis, and must be subject to terms no less broad than the Insurance Services Office ("ISO") Commercial General Liability Form CG0001 (2001 or newer edition), or equivalent. At a minimum, coverage must include liability arising from premises, operations, bodily injury and property damage, independent contractors, products-completed operations including construction defect, contractual liability, blanket contractual liability, and personal injury and advertising injury. All required limits, terms and conditions of coverage must be maintained during the term of this Contract.
Minimum Limits:
$1,000,000 each occurrence Bodily Injury and Property Damage
$1,000,000 Personal and Advertising Injury
$2,000,000 aggregate for products liability-completed operations
$2,000,000 general aggregate

3. *Commercial Automobile Liability Insurance.* During the term of this Contract, Supplier will maintain insurance covering all owned, hired, and non-owned automobiles in limits of liability not less than indicated below. The coverage must be subject to terms

DocuSign Envelope ID: AFBF1B44-DC37-48E9-9B89-77FE3F1FD584

no less broad than ISO Business Auto Coverage Form CA 0001 (2010 edition or newer), or equivalent.

Minimum Limits:
$1,000,000 each accident, combined single limit

4. *Umbrella Insurance*. During the term of this Contract, Supplier will maintain umbrella coverage over Employer's Liability, Commercial General Liability, and Commercial Automobile.

Minimum Limits:
$2,000,000

5. *Professional/Technical, Errors and Omissions, and/or Miscellaneous Professional Liability*. During the term of this Contract, Supplier will maintain coverage for all claims the Supplier may become legally obligated to pay resulting from any actual or alleged negligent act, error, or omission related to Supplier's professional services required under this Contract.

Minimum Limits:
$2,000,000 per claim or event
$2,000,000 – annual aggregate

6. *Network Security and Privacy Liability Insurance*. During the term of this Contract, Supplier will maintain coverage for network security and privacy liability. The coverage may be endorsed on another form of liability coverage or written on a standalone policy. The insurance must cover claims which may arise from failure of Supplier's security resulting in, but not limited to, computer attacks, unauthorized access, disclosure of not public data – including but not limited to, confidential or private information, transmission of a computer virus, or denial of service.

Minimum limits:
$2,000,000 per occurrence
$2,000,000 annual aggregate

Failure of Supplier to maintain the required insurance will constitute a material breach entitling Sourcewell to immediately terminate this Contract for default.

B. CERTIFICATES OF INSURANCE. Prior to commencing under this Contract, Supplier must furnish to Sourcewell a certificate of insurance, as evidence of the insurance required under this Contract. Prior to expiration of the policy(ies), renewal certificates must be mailed to Sourcewell, 202 12th Street Northeast, P.O. Box 219, Staples, MN 56479 or sent to the Sourcewell Supplier Development Administrator assigned to this Contract. The certificates must be signed by a person authorized by the insurer(s) to bind coverage on their behalf.

DocuSign Envelope ID: AFBF1B44-DC37-48E9-9B89-77FE3F1FD584

Failure to request certificates of insurance by Sourcewell, or failure of Supplier to provide certificates of insurance, in no way limits or relieves Supplier of its duties and responsibilities in this Contract.

C. ADDITIONAL INSURED ENDORSEMENT AND PRIMARY AND NON-CONTRIBUTORY INSURANCE CLAUSE. Supplier agrees to list Sourcewell and its Participating Entities, including their officers, agents, and employees, as an additional insured under the Supplier's commercial general liability insurance policy with respect to liability arising out of activities, "operations," or "work" performed by or on behalf of Supplier, and products and completed operations of Supplier. The policy provision(s) or endorsement(s) must further provide that coverage is primary and not excess over or contributory with any other valid, applicable, and collectible insurance or self-insurance in force for the additional insureds.

D. WAIVER OF SUBROGATION. Supplier waives and must require (by endorsement or otherwise) all its insurers to waive subrogation rights against Sourcewell and other additional insureds for losses paid under the insurance policies required by this Contract or other insurance applicable to the Supplier or its subcontractors. The waiver must apply to all deductibles and/or self-insured retentions applicable to the required or any other insurance maintained by the Supplier or its subcontractors. Where permitted by law, Supplier must require similar written express waivers of subrogation and insurance clauses from each of its subcontractors.

E. UMBRELLA/EXCESS LIABILITY/SELF-INSURED RETENTION. The limits required by this Contract can be met by either providing a primary policy or in combination with umbrella/excess liability policy(ies), or self-insured retention.

19. COMPLIANCE

A. LAWS AND REGULATIONS. All Equipment, Products, or Services provided under this Contract must comply fully with applicable federal laws and regulations, and with the laws in the states and provinces in which the Equipment, Products, or Services are sold.

B. LICENSES. Supplier must maintain a valid and current status on all required federal, state/provincial, and local licenses, bonds, and permits required for the operation of the business that the Supplier conducts with Sourcewell and Participating Entities.

20. BANKRUPTCY, DEBARMENT, OR SUSPENSION CERTIFICATION

Supplier certifies and warrants that it is not in bankruptcy or that it has previously disclosed in writing certain information to Sourcewell related to bankruptcy actions. If at any time during this Contract Supplier declares bankruptcy, Supplier must immediately notify Sourcewell in writing.

DocuSign Envelope ID: AFBF1B44-DC37-48E9-9B89-77FE3F1FD584

Supplier certifies and warrants that neither it nor its principals are presently debarred, suspended, proposed for debarment, declared ineligible, or voluntarily excluded from programs operated by the State of Minnesota; the United States federal government or the Canadian government, as applicable; or any Participating Entity. Supplier certifies and warrants that neither it nor its principals have been convicted of a criminal offense related to the subject matter of this Contract. Supplier further warrants that it will provide immediate written notice to Sourcewell if this certification changes at any time.

21. PROVISIONS FOR NON-UNITED STATES FEDERAL ENTITY PROCUREMENTS UNDER UNITED STATES FEDERAL AWARDS OR OTHER AWARDS

Participating Entities that use United States federal grant or FEMA funds to purchase goods or services from this Contract may be subject to additional requirements including the procurement standards of the Uniform Administrative Requirements, Cost Principles and Audit Requirements for Federal Awards, 2 C.F.R. § 200. Participating Entities may have additional requirements based on specific funding source terms or conditions. Within this Article, all references to "federal" should be interpreted to mean the United States federal government. The following list only applies when a Participating Entity accesses Supplier's Equipment, Products, or Services with United States federal funds.

A. EQUAL EMPLOYMENT OPPORTUNITY. Except as otherwise provided under 41 C.F.R. § 60, all contracts that meet the definition of "federally assisted construction contract" in 41 C.F.R. § 60-1.3 must include the equal opportunity clause provided under 41 C.F.R. §60-1.4(b), in accordance with Executive Order 11246, "Equal Employment Opportunity" (30 FR 12319, 12935, 3 C.F.R. §, 1964-1965 Comp., p. 339), as amended by Executive Order 11375, "Amending Executive Order 11246 Relating to Equal Employment Opportunity," and implementing regulations at 41 C.F.R. § 60, "Office of Federal Contract Compliance Programs, Equal Employment Opportunity, Department of Labor." The equal opportunity clause is incorporated herein by reference.

B. DAVIS-BACON ACT, AS AMENDED (40 U.S.C. § 3141-3148). When required by federal program legislation, all prime construction contracts in excess of $2,000 awarded by non-federal entities must include a provision for compliance with the Davis-Bacon Act (40 U.S.C. § 3141-3144, and 3146-3148) as supplemented by Department of Labor regulations (29 C.F.R. § 5, "Labor Standards Provisions Applicable to Contracts Covering Federally Financed and Assisted Construction"). In accordance with the statute, contractors must be required to pay wages to laborers and mechanics at a rate not less than the prevailing wages specified in a wage determination made by the Secretary of Labor. In addition, contractors must be required to pay wages not less than once a week. The non-federal entity must place a copy of the current prevailing wage determination issued by the Department of Labor in each solicitation. The decision to award a contract or subcontract must be conditioned upon the acceptance of the wage determination. The non-federal entity must report all suspected or reported violations to the federal awarding agency. The contracts must also include a provision for compliance with

DocuSign Envelope ID: AFBF1B44-DC37-48E9-9B89-77FE3F1FD584

the Copeland "Anti-Kickback" Act (40 U.S.C. § 3145), as supplemented by Department of Labor regulations (29 C.F.R. § 3, "Contractors and Subcontractors on Public Building or Public Work Financed in Whole or in Part by Loans or Grants from the United States"). The Act provides that each contractor or subrecipient must be prohibited from inducing, by any means, any person employed in the construction, completion, or repair of public work, to give up any part of the compensation to which he or she is otherwise entitled. The non-federal entity must report all suspected or reported violations to the federal awarding agency. Supplier must be in compliance with all applicable Davis-Bacon Act provisions.

C. CONTRACT WORK HOURS AND SAFETY STANDARDS ACT (40 U.S.C. § 3701-3708). Where applicable, all contracts awarded by the non-federal entity in excess of $100,000 that involve the employment of mechanics or laborers must include a provision for compliance with 40 U.S.C. §§ 3702 and 3704, as supplemented by Department of Labor regulations (29 C.F.R. § 5). Under 40 U.S.C. § 3702 of the Act, each contractor must be required to compute the wages of every mechanic and laborer on the basis of a standard work week of 40 hours. Work in excess of the standard work week is permissible provided that the worker is compensated at a rate of not less than one and a half times the basic rate of pay for all hours worked in excess of 40 hours in the work week. The requirements of 40 U.S.C. § 3704 are applicable to construction work and provide that no laborer or mechanic must be required to work in surroundings or under working conditions which are unsanitary, hazardous or dangerous. These requirements do not apply to the purchases of supplies or materials or articles ordinarily available on the open market, or contracts for transportation or transmission of intelligence. This provision is hereby incorporated by reference into this Contract. Supplier certifies that during the term of an award for all contracts by Sourcewell resulting from this procurement process, Supplier must comply with applicable requirements as referenced above.

D. RIGHTS TO INVENTIONS MADE UNDER A CONTRACT OR AGREEMENT. If the federal award meets the definition of "funding agreement" under 37 C.F.R. § 401.2(a) and the recipient or subrecipient wishes to enter into a contract with a small business firm or nonprofit organization regarding the substitution of parties, assignment or performance of experimental, developmental, or research work under that "funding agreement," the recipient or subrecipient must comply with the requirements of 37 C.F.R. § 401, "Rights to Inventions Made by Nonprofit Organizations and Small Business Firms Under Government Grants, Contracts and Cooperative Agreements," and any implementing regulations issued by the awarding agency. Supplier certifies that during the term of an award for all contracts by Sourcewell resulting from this procurement process, Supplier must comply with applicable requirements as referenced above.

E. CLEAN AIR ACT (42 U.S.C. § 7401-7671Q.) AND THE FEDERAL WATER POLLUTION CONTROL ACT (33 U.S.C. § 1251-1387). Contracts and subgrants of amounts in excess of $150,000 require the non-federal award to agree to comply with all applicable standards, orders or regulations issued pursuant to the Clean Air Act (42 U.S.C. § 7401- 7671q) and the Federal Water Pollution Control Act as amended (33 U.S.C. § 1251- 1387). Violations must be reported to the Federal awarding agency and the Regional Office of the Environmental Protection Agency (EPA).

DocuSign Envelope ID: AFBF1B44-DC37-48E9-9B89-77FE3F1FD584

Supplier certifies that during the term of this Contract will comply with applicable requirements as referenced above.

F. DEBARMENT AND SUSPENSION (EXECUTIVE ORDERS 12549 AND 12689). A contract award (see 2 C.F.R. § 180.220) must not be made to parties listed on the government wide exclusions in the System for Award Management (SAM), in accordance with the OMB guidelines at 2 C.F.R. §180 that implement Executive Orders 12549 (3 C.F.R. § 1986 Comp., p. 189) and 12689 (3 C.F.R. § 1989 Comp., p. 235), "Debarment and Suspension." SAM Exclusions contains the names of parties debarred, suspended, or otherwise excluded by agencies, as well as parties declared ineligible under statutory or regulatory authority other than Executive Order 12549. Supplier certifies that neither it nor its principals are presently debarred, suspended, proposed for debarment, declared ineligible, or voluntarily excluded from participation by any federal department or agency.

G. BYRD ANTI-LOBBYING AMENDMENT, AS AMENDED (31 U.S.C. § 1352). Suppliers must file any required certifications. Suppliers must not have used federal appropriated funds to pay any person or organization for influencing or attempting to influence an officer or employee of any agency, a member of Congress, officer or employee of Congress, or an employee of a member of Congress in connection with obtaining any federal contract, grant, or any other award covered by 31 U.S.C. § 1352. Suppliers must disclose any lobbying with non-federal funds that takes place in connection with obtaining any federal award. Such disclosures are forwarded from tier to tier up to the non-federal award. Suppliers must file all certifications and disclosures required by, and otherwise comply with, the Byrd Anti-Lobbying Amendment (31 U.S.C. § 1352).

H. RECORD RETENTION REQUIREMENTS. To the extent applicable, Supplier must comply with the record retention requirements detailed in 2 C.F.R. § 200.333. The Supplier further certifies that it will retain all records as required by 2 C.F.R. § 200.333 for a period of 3 years after grantees or subgrantees submit final expenditure reports or quarterly or annual financial reports, as applicable, and all other pending matters are closed.

I. ENERGY POLICY AND CONSERVATION ACT COMPLIANCE. To the extent applicable, Supplier must comply with the mandatory standards and policies relating to energy efficiency which are contained in the state energy conservation plan issued in compliance with the Energy Policy and Conservation Act.

J. BUY AMERICAN PROVISIONS COMPLIANCE. To the extent applicable, Supplier must comply with all applicable provisions of the Buy American Act. Purchases made in accordance with the Buy American Act must follow the applicable procurement rules calling for free and open competition.

K. ACCESS TO RECORDS (2 C.F.R. § 200.336). Supplier agrees that duly authorized representatives of a federal agency must have access to any books, documents, papers and

DocuSign Envelope ID: AFBF1B44-DC37-48E9-9B89-77FE3F1FD584

records of Supplier that are directly pertinent to Supplier's discharge of its obligations under this Contract for the purpose of making audits, examinations, excerpts, and transcriptions. The right also includes timely and reasonable access to Supplier's personnel for the purpose of interview and discussion relating to such documents.

L. PROCUREMENT OF RECOVERED MATERIALS (2 C.F.R. § 200.322). A non-federal entity that is a state agency or agency of a political subdivision of a state and its contractors must comply with Section 6002 of the Solid Waste Disposal Act, as amended by the Resource Conservation and Recovery Act. The requirements of Section 6002 include procuring only items designated in guidelines of the Environmental Protection Agency (EPA) at 40 C.F.R. § 247 that contain the highest percentage of recovered materials practicable, consistent with maintaining a satisfactory level of competition, where the purchase price of the item exceeds $10,000 or the value of the quantity acquired during the preceding fiscal year exceeded $10,000; procuring solid waste management services in a manner that maximizes energy and resource recovery; and establishing an affirmative procurement program for procurement of recovered materials identified in the EPA guidelines.

M. FEDERAL SEAL(S), LOGOS, AND FLAGS. The Supplier cannot use the seal(s), logos, crests, or reproductions of flags or likenesses of Federal agency officials without specific pre-approval.

N. NO OBLIGATION BY FEDERAL GOVERNMENT. The U.S. federal government is not a party to this Contract or any purchase by a Participating Entity and is not subject to any obligations or liabilities to the Participating Entity, Supplier, or any other party pertaining to any matter resulting from the Contract or any purchase by an authorized user.

O. PROGRAM FRAUD AND FALSE OR FRAUDULENT STATEMENTS OR RELATED ACTS. The Contractor acknowledges that 31 U.S.C. 38 (Administrative Remedies for False Claims and Statements) applies to the Supplier's actions pertaining to this Contract or any purchase by a Participating Entity.

P. FEDERAL DEBT. The Supplier certifies that it is non-delinquent in its repayment of any federal debt. Examples of relevant debt include delinquent payroll and other taxes, audit disallowance, and benefit overpayments.

Q. CONFLICTS OF INTEREST. The Supplier must notify the U.S. Office of General Services, Sourcewell, and Participating Entity as soon as possible if this Contract or any aspect related to the anticipated work under this Contract raises an actual or potential conflict of interest (as described in 2 C.F.R. Part 200). The Supplier must explain the actual or potential conflict in writing in sufficient detail so that the U.S. Office of General Services, Sourcewell, and Participating Entity are able to assess the actual or potential conflict; and provide any additional information as necessary or requested.

DocuSign Envelope ID: AFBF1B44-DC37-48E9-9B89-77FE3F1FD584

R. U.S. EXECUTIVE ORDER 13224. The Supplier, and its subcontractors, must comply with U.S. Executive Order 13224 and U.S. Laws that prohibit transactions with and provision of resources and support to individuals and organizations associated with terrorism.

S. PROHIBITION ON CERTAIN TELECOMMUNICATIONS AND VIDEO SURVEILLANCE SERVICES OR EQUIPMENT. To the extent applicable, Supplier certifies that during the term of this Contract it will comply with applicable requirements of 2 C.F.R. § 200.216.

T. DOMESTIC PREFERENCES FOR PROCUREMENTS. To the extent applicable, Supplier certifies that during the term of this Contract will comply with applicable requirements of 2 C.F.R. § 200.322.

22. CANCELLATION

Sourcewell or Supplier may cancel this Contract at any time, with or without cause, upon 60 days' written notice to the other party. However, Sourcewell may cancel this Contract immediately upon discovery of a material defect in any certification made in Supplier's Proposal. Cancellation of this Contract does not relieve either party of financial, product, or service obligations incurred or accrued prior to cancellation.

Sourcewell	Sea-Western Inc.
DocuSigned by: Jeremy Schwartz C0FD2A139D06489...	DocuSigned by: Troy M. Enright FD1ECE510C3143E...
By: _____	By: _____
Jeremy Schwartz	Troy Enright
Title: Chief Procurement Officer	Title: Director of Operations
Date: 4/4/2024 | 7:56 AM CDT	Date: 4/3/2024 | 8:31 AM CDT

RFP 020124 - Firefighting Equipment and Rescue Tools with Related Supplies and Accessories

Vendor Details

Company Name:	Sea-Western Inc
Address:	12815 NE 124th St Suite H Kirkland, Washington 98034
Contact:	Troy Enright
Email:	troy@seawestern.com
Phone:	360-961-8048
HST#:	91-0998307

Submission Details

Created On:	Wednesday January 24, 2024 09:38:55
Submitted On:	Thursday February 01, 2024 16:24:30
Submitted By:	Troy Enright
Email:	troy@seawestern.com
Transaction #:	2f07e010-6853-4ccc-affe-64dc830445cf
Submitter's IP Address:	166.216.158.224

Specifications

Table 1: Proposer Identity & Authorized Representatives

General Instructions (applies to all Tables) Sourcewell prefers a brief but thorough response to each question. Do not merely attach additional documents to your response without also providing a substantive response. Do not leave answers blank; respond “N/A” if the question does not apply to you (preferably with an explanation).

Line Item	Question	Response *	
1	Proposer Legal Name (one legal entity only): (In the event of award, will execute the resulting contract as "Supplier")	Sea-Western Inc	*
2	Identify all subsidiary entities of the Proposer whose equipment, products, or services are included in the Proposal.	N/A	*
3	Identify all applicable assumed names or DBA names of the Proposer or Proposer's subsidiaries in Line 1 or Line 2 above.	N/A	*
4	Provide your CAGE code or Unique Entity Identifier (SAM):	Cage Code: 0JXB0 Unique Entity Identifier: L8QLNQHQN8U4	*
5	Proposer Physical Address:	12815 NE 124th St Suite H Kirkland, WA 98034	*
6	Proposer website address (or addresses):	https://seawestern.com/	*
7	Proposer's Authorized Representative (name, title, address, email address & phone) (The representative must have authority to sign the “Proposer’s Assurance of Compliance” on behalf of the Proposer and, in the event of award, will be expected to execute the resulting contract):	Troy Enright - Director of Operations SeaWestern 12815 NE 124th St Suite H Kirkland, WA 98034 info@seawestern.com, troy@seawestern.com 425-821-5858	*
8	Proposer's primary contact for this proposal (name, title, address, email address & phone):	Troy Enright - Director of Operations SeaWestern 12815 NE 124th St Suite H Kirkland, WA 98034 info@seawestern.com, troy@seawestern.com 425-821-5858	*
9	Proposer's other contacts for this proposal, if any (name, title, address, email address & phone):	Steve Morris - President SeaWestern 13126 NE Airport Way Portland, OR 97230 steve@seawestern.com 503-816-4516	

Table 2: Company Information and Financial Strength

Line Item	Question	Response *	

10	Provide a brief history of your company, including your company's core values, business philosophy, and industry longevity related to the requested equipment, products or services.	SeaWestern is a fire distribution company with its corporate headquarters in Kirkland, Washington and has been in the fire distribution business in the Western United States for the past 45+ years. Our company was founded by Russ Morris in 1976 and is currently led by his youngest son, Steve Morris. SeaWestern has been focused on providing the highest level of customer service in the fire distribution industry. The SeaWestern Mission statement is to provide "Quality Products, at a Reasonable Price with Service After the Sale." This focus on service after the sale, has allowed SeaWestern to be highly successful in the Pacific Northwest and the fundamental basis for the recent expansion over the past five (5) years from three (3) states to now serving 11 western states and generating over $42 million in sales in 2023. Many of these sales are through the fulfillment of purchases through contracts to local/municipal and state organizations. To support SeaWestern's increasing geographic service area we have strategically selected warehouse locations to provide our customers not only with superior products but also a high level of support. Our corporate headquarters is located in Kirkland, Washington, and SeaWestern has branch offices in Tacoma, Washington; Portland, Oregon; Las Vegas, Nevada; and Denver, Colorado. SeaWestern is proud to be the distributor of the highest quality products to the fire service, government agencies including state, local and education and public entities. SeaWestern works with over 60 vendors/manufactures which include industry leaders such as 3M/Scott Fire & Safety, Lion PPE & Training, Bauer Compressors, Key Fire Hose, Elkhart Brass Nozzles, Phenix Helmets, Holmatro Rescue Tools, Blowhard Fans, Blackline Safety Gas Detection, Rescue Intellitech Solo washers, Flir Thermal Imaging and more. SeaWestern is focused on building strong partnerships and efficient lines of communication both with our manufacturing partners and the customers we serve to make the acquisition process as efficient and smooth as possible.	*
11	What are your company's expectations in the event of an award?	With this award SeaWestern looks forward to providing our sales force an important tool to further educate our customers on a significant procurement vehicle for fire departments and agencies that may or may not use Sourcewell currently, and/or plan to utilize group purchasing contracts to acquire products and services that meets their needs. This added value will help to address purchasing policy requirements by insuring they are getting a competitive RFP process satisfied, a full line of contracted solutions, national discounted pricing, vetted supplier/distribution sources while minimizing the associated cost of going out to bid / RFP. SeaWestern is prepared to ensure full compliance to the solicitation requirements of the contract.	*
12	Demonstrate your financial strength and stability with meaningful data. This could include such items as financial statements, SEC filings, credit and bond ratings, letters of credit, and detailed reference letters. Upload supporting documents (as applicable) in the document upload section of your response.	SeaWestern is a stable and growing organization represented by the bank reference letter and audited financials from 2023. Please see the attachment "Sea-Western 2023 Financial Statements - FINAL"	*
13	What is your US market share for the solutions that you are proposing?	SeaWestern approximates that we currently serve 10-15% of the nationwide market and 30-35% of the western states market for the solutions proposed. Over the past few years SeaWestern has an approximate current growth rate of 40% per year and estimates doing business with 50-60% of the western markets we serve in the next couple of years to which these products and services apply.	*
14	What is your Canadian market share for the solutions that you are proposing?	N/A	*
15	Has your business ever petitioned for bankruptcy protection? If so, explain in detail.	No	*
16	How is your organization best described: is it a manufacturer, a distributor/dealer/reseller, or a service provider? Answer whichever question (either a) or b) just below) best applies to your organization. a) If your company is best described as a distributor/dealer/reseller (or similar entity), provide your written authorization to act as a distributor/dealer/reseller for the manufacturer of the products proposed in this RFP. If applicable, is your dealer network independent or company owned? b) If your company is best described as a manufacturer or service provider, describe your relationship with your sales and service force and with your dealer network in delivering the products and services proposed in this RFP. Are these individuals your employees, or the employees of a third party?	a) SeaWestern is an authorized distributor/dealer/reseller for the manufacturer's products and models represented in this proposal in the regions & territories designated by associated distribution agreements. As a distributor/dealer for Holmatro Rescue Tools, SeaWestern has authorized / certified service technicians on staff. All SeaWestern staff and representatives are employees, and we are an independent dealer. Please see written authorizations attached under: Dist & Serv Certs_Agreements_Catalogs_Manuals (Zip Folder)	*

17	If applicable, provide a detailed explanation outlining the licenses and certifications that are both required to be held, and actually held, by your organization (including third parties and subcontractors that you use) in pursuit of the business contemplated by this RFP.	SeaWestern holds business licenses in the 11 western states it conducts business in. SeaWestern is an authorized reseller for Key Hose, Elkhart Brass, 3M Scott, Blowhard Fans, Holmatro, Teledyne FLIR, Blackline Safety, Rescue Intellitech SOLO Rescue Washers, Circul-Air Corp, Junkyard Dog Rescue Struts, Chemguard Foam, Leatherhead Tools, Fire Hooks Unlimited, and Redhead Brass, and as applicable all these related products and equipment adhering to National Fire Protection Association (NFPA), National Institute for Occupational Safety and Health (NIOSH), American National Standards Institute (ANSI) and Department of Transportation (DOT) standards. Not specific to this proposal SeaWestern is a certified 3M SCOTT Fire & Safety 5-Star Service Center and a Bauer Compressor Authorized Service Provider. SeaWestern also provides in-house Hydrostatic testing of breathing air cylinders.	*
18	Provide all “Suspension or Debarment” information that has applied to your organization during the past ten years.	N/A – SeaWestern has not been suspended or disbarred from participating in any solicitation.	*

Table 3: Industry Recognition & Marketplace Success

Line Item	Question	Response *	
19	Describe any relevant industry awards or recognition that your company has received in the past five years	SeaWestern has won a number of sales achievements and associated awards over the past 30 years. Most recently SeaWestern was named LION Dealer of the Year for 2021 & 2023, and continues to be a Bauer Compressors Top Ten Partner for over the past decade, both top industry distinctions. SeaWestern is one of the few distributors in the nation that is a certified 3M Scott Fire & Safety 5 Star Service Center.	*
20	What percentage of your sales are to the governmental sector in the past three years	SeaWestern estimates that approximately 98%+ of sales have been to the governmental sector in the past three years.	*
21	What percentage of your sales are to the education sector in the past three years	SeaWestern estimates that approximately 2% or less of sales have been to the education and private sector in the past three years.	*
22	List any state, provincial, or cooperative purchasing contracts that you hold. What is the annual sales volume for each of these contracts over the past three years?	Turnout & PPE Contracts: Puget Sound Fire Authority ILA approximately $12M in past 3 years Portland Fire Dept. approximately $1.5M in past 3 years Grand Junction Fire Dept. approximately $925k in past 2 years Denver Fire Dept. approximately $390k in past year Poudre Fire Dept. approximately $250k in past year North Las Vegas Fire Dept. approximately $170k in past year Colorado Division of Fire Protection and Control - $185k in past 2 years Thermal Imaging Camera: Tualatin Valley Fire & Rescue ILA approximately $375K in past 3 years Portland Fire Dept. approximately $225k in past 3 years 3M/Scott HGAC (Houston-Galveston Area Council) contact sales over the last 3 Years - $8.25M Bauer NPPGov contract sales over the last 3 Years - $3.65M	*
23	List any GSA contracts or Standing Offers and Supply Arrangements (SOSA) that you hold. What is the annual sales volume for each of these contracts over the past three years?	Currently SeaWestern does not hold any GSA contracts, Standing Offers and Supply Arrangement.	*

Table 4: References/Testimonials

Line Item 24. Supply reference information from three customers who are eligible to be Sourcewell participating entities.

Entity Name *	Contact Name *	Phone Number *	
Portland Fire & Rescue	Bill Goforth - Deputy Chief of Logistics	503-823-4558	*
Central Pierce Fire and Rescue	Radcliffe McKenzie - Assist Chief of Safety	253-538-6533	*
North Las Vegas Fire Department	Scott Schuster - Fire Logistics Officer	702-669-3343	*

Table 5: Top Five Government or Education Customers

Line Item 25. Provide a list of your top five government, education, or non-profit customers (entity name is optional), including entity type, the state or province the entity is located in, scope of the project(s), size of transaction(s), and dollar volumes from the past three years.

Entity Name	Entity Type *	State / Province *	Scope of Work *	Size of Transactions *	Dollar Volume Past Three Years *	
Seattle Fire Department	Government	Washington - WA	SeaWestern supports the department with Turnouts, PPE, Helmets, Leather Fronts, Bauer Compressors, Thermal Imaging Cameras and Scott SCBA.	Size of transactions come in various amounts including under $100, but typically range anywhere from $10k to $1M.	$4.2 million	*
Tualatin Valley Fire & Rescue	Government	Oregon - OR	SeaWestern supports the department with Turnouts, PPE, Hoods, Gloves, Boots, Stationwear, Fans, Bauer Compressors, Hose & Nozzles, Thermal Imaging Cameras, Scott SCBAs and Service.	Size of transactions come in various amounts including under $100, but typically range anywhere from $5k to $2M.	$3.5 million	*
Portland Fire & Rescue	Government	Oregon - OR	SeaWestern supports the department with Turnouts, PPE, Hoods, Gloves, Boots, Stationwear, Fans, Bauer Compressors, SOLO Washers, Thermal Imaging Cameras, Scott SCBAs and Service.	Size of transactions come in various amounts including under $100, but typically range anywhere from $5k to $250k.	$2.1 million	*
Tacoma Fire Department	Government	Washington - WA	SeaWestern supports the department with Turnouts, Stationwear, Boots, Gloves, Hose & Nozzles, Thermal Imaging Cameras and Wildland.	Size of transactions come in various amounts including under $100, but typically range anywhere from $1k to $200k.	$2 million	*
Central Pierce Fire & Rescue	Government	Washington - WA	SeaWestern supports the department with Turnouts, Stationwear, Response Gear, Helmets, Gloves, Boots, Thermal Imaging Cameras, Hose & Nozzles, Wildland, Bauer Compressors and Service.	Size of transactions come in various amounts including under $100, but typically range anywhere from $1k to $225k.	$1.8 million	*

Table 6: Ability to Sell and Deliver Service

Describe your company's capability to meet the needs of Sourcewell participating entities across the US and Canada, as applicable. Your response should address in detail at least the following areas: locations of your network of sales and service providers, the number of workers (full-time equivalents) involved in each sector, whether these workers are your direct employees (or employees of a third party), and any overlap between the sales and service functions.

Line Item	Question	Response *	
26	Sales force.	SeaWestern currently has 43 members of our team of which 41 are full-time employees of which two (2) are part time, one (1) in sales and one (1) in service. SeaWestern has six (6) members in management roles, 17 sales professionals, six (6) members in administrative sales and service support roles, and 14 in service technician roles. SeaWestern's sales force has representatives in all 11 western states that we directly serve with the exception of California (transition) and Wyoming as rep resides in Colorado.	*

27	Dealer network or other distribution methods.	SeaWestern works with Direct Sales Representatives (DSR) of manufacturers and independent manufacturers' representative firms to provide additional direct to customer support. As an example, SeaWestern works closely with Shur-Sales, a multi-divisional independent manufacturers' representative firm that has a sales force in the Industrial Safety Equipment and Fire-Fighting Equipment marketplaces. Each division has a dedicated sales force, focusing on their specific markets to support SeaWestern with represented manufacturer products in designated territories. Shur-Sales & Marketing Industrial Safety Team territory includes; Colorado, Montana, Wyoming, Idaho, Utah, New Mexico, North-Western Nevada, Kansas, Nebraska, Missouri, and Southern Illinois. The Shur-Sales Fire Service Team territory includes Colorado, Montana, Wyoming, Idaho, Utah, Arizona, Nevada, Washington, Oregon, California, El Paso, Texas, Hawaii, and Alaska.	*
28	Service force.	SeaWestern service personnel members are a combination of 3M Scott Fire & Safety, Bauer Compressor and Holmatro certified technicians (2). We have 14 service technicians located throughout our territory designations which includes 10 mobile service technicians, and four (4) in-house service technicians at out office locations in Kirkland WA, Portland OR, Las Vegas NV, and Denver CO.	*
29	Describe the ordering process. If orders will be handled by distributors, dealers or others, explain the respective roles of the Proposer and others.	Often SeaWestern provides our customers with a quote for review. When SeaWestern receives authorization (verbal, written or purchase order) from the participating customers entities to place an order, SeaWestern then enters the order for product and / or services through our NetSuite automated ERP system. Customers can also place orders online via our SeaWestern website. Orders are then fulfilled from SeaWestern inventory and / or a Purchased Order is placed to a manufacturer / supplier which may or may not drop ship directly to customers. Once an order has been fulfilled, either a receipt is sent for credit card orders, or an invoice is sent to the customer with Net30 terms to remit payment.	*
30	Describe in detail the process and procedure of your customer service program, if applicable. Include your response-time capabilities and commitments, as well as any incentives that help your providers meet your stated service goals or promises.	SeaWestern understands that delivery, in addition to quality and price, matters. With that in mind, we strive to keep a large inventory of the items our customers want on our shelves. We ship all orders received by 1pm the same day. Being centrally located means next-day delivery for most of our customers. In addition, we stock a large volume of sought-after merchandise, which enables us to obtain some very attractive volume pricing from our manufacturers; value that we gladly pass along to our customers in the form of reasonable prices. We work hard on our customer's behalf to secure the very best pricing. SeaWestern recognizes that in today's world, we all have a lot of tasks competing for our time. With that in mind, SeaWestern employs a full-time, factory-certified mobile technician available to provide maintenance on your 3M Scott SCBA's and/or air system needs (compressor, fill stations, etc) right at your station! SeaWestern's commitment to Service after the Sale is further supported by an in-house 3M Scott 5-Star Certified repair center which offers fast turn-around on the repair of 3M Scott SCBA's, flow testing and hydrostatic testing. In valuing our customer's time, we strive to have a knowledgeable outside sales staff and inside customer service staff; so the customer's call is handled with the first inquiry. We back up that commitment by providing product training seminars for our staff at regular intervals and opportunities for factory-provided training. SeaWestern’s headquarters is located in Kirkland, WA and the standard hours of operation are Monday through Friday from 7:30am – 5pm PST. However, SeaWestern territory sales representatives and mobile service technicians may provide extended hours based upon geographical location and customer agreement. A SeaWestern representative can be reached by phone at 1-800-327-5312 or by email at info@seawestern.com. During the business day we strive to return messages within a couple hours and provide next business day turnaround on phone and email inquiries outside of normal business hours. The local SeaWestern sales representative and mobile service technician will provide their contact information directly to customers they serve in case of emergencies outside typical operating hours. For emergency work outside of regularly scheduled service SeaWestern makes every effort to address within 48 hours during the business week.	*
31	Describe your ability and willingness to provide your products and services to Sourcewell participating entities in the United States.	In combination with the broad products and services it provides, SeaWestern looks forward to a Sourcewell award to better serve our customers in our designated territories by providing the additional value of a government entity / purchasing vehicle for the ease and security of acquisition. With SeaWestern’s growing territory and sales team, we look to increase Sourcewell contract utilization as we have the personnel, infrastructure, processes, and capacity to implement effectively and adhere to the contact terms and conditions set forth.	*

32	Describe your ability and willingness to provide your products and services to Sourcewell participating entities in Canada.	N/A - SeaWestern only conducts business domestically in the western United States.	*
33	Identify any geographic areas of the United States or Canada that you will NOT be fully serving through the proposed contract.	Based on our current manufacturer territory agreements, SeaWestern does not serve beyond Colorado in the central to eastern regions of United States nor any part of Canada. SeaWestern conducts in-person business with our fire service customers in 11 western states, including Alaska, Arizona, California, Colorado, Idaho, Montana, Nevada, Oregon, Utah, Washington and Wyoming.	*
34	Identify any Sourcewell participating entity sectors (i.e., government, education, not-for-profit) that you will NOT be fully serving through the proposed contract. Explain in detail. For example, does your company have only a regional presence, or do other cooperative purchasing contracts limit your ability to promote another contract?	At this time the only limiting factor to NOT fully serving participating entity sectors (i.e., government, education, not-for-profit, etc) would be due to regional presence. No other cooperative purchasing contracts or agreements limit our ability to promote another contract.	*
35	Define any specific contract requirements or restrictions that would apply to our participating entities in Hawaii and Alaska and in US Territories.	SeaWestern does not currently serve Hawaii or other US Territories. Due to the potential complexity of logistics to remote locations in Alaska, SeaWestern will provide a quote for shipping/transportation before customer acquisition.	*

Table 7: Marketing Plan

Line Item	Question	Response *	
36	Describe your marketing strategy for promoting this contract opportunity. Upload representative samples of your marketing materials (if applicable) in the document upload section of your response.	SeaWestern looks forward to further educating our sales force by providing Sourcewell contract details, resources and play book to promote to current and new customers simplifying administrative tasks and offering them discounted pricing. SeaWestern will also market to all potential customer entities by utilizing promotional tools via online, email and print materials, immediately announcing the Sourcewell award on these mediums. SeaWestern has a boots on the ground model with direct Sales Reps visiting fire departments on an ongoing basis. Our sales reps have strong relationships with fire service departments that in some cases goes back decades. SeaWestern participates in trade shows and conferences across the western region (approx. 15-20 per year), and incorporates logo pop-up & wall banners, table cloths, rugs, brochures and complimentary marketing items. SeaWestern puts out an annual catalog of our product and service offerings and also maintains a marketplace website providing contract and product information allowing customers to place online orders via the website. Please see attached examples: Marketing Plan (Zip Folder)	*
37	Describe your use of technology and digital data (e.g., social media, metadata usage) to enhance marketing effectiveness.	SeaWestern understands that we live in a digital age where technology and data greatly impact the marketing of one's brand, products and services. SeaWestern uses metadata to enhance marketing effectiveness and utilizes social media such as Facebook and LinkedIn to network with agencies and increase promotion. In addition, SeaWestern promotes its products and services through several 3rd party online outlets such as Daily Dispatch. A few years ago, SeaWestern moved to an Oracle Netsuite (ERP) platform to handle administration functions for our business providing an increased technological integration providing a suite of tools and reporting functions measuring our success rates.	*
38	In your view, what is Sourcewell's role in promoting contracts arising out of this RFP? How will you integrate a Sourcewell-awarded contract into your sales process?	SeaWestern sees Sourcewell listing the awarded dealers contact and contract information on the website, public disclosures and marketing material including email blasts. SeaWestern is familiar with promoting similar contracts such as HGAC, and NPPGov, and comfortable navigating these platforms and adhering to terms. SeaWestern will integrate Sourcewell contract and marketing tools into ongoing Sales Meetings and Trainings to provide a high level of knowledge to our Sales force and support teams in an effort to increase contract sales.	*
39	Are your products or services available through an e-procurement ordering process? If so, describe your e-procurement system and how governmental and educational customers have used it.	Yes, we have e-commerce through our website www.seawestern.com where government, education and related customer entities can place marketplace transactions and inquire on products and services. Government and education customers use the website to easily identify featured brands and search through its categorized product groups with detailed descriptions, pricing and features such as "Quick Shop" or "Chose Options" and searchable filters such as, brand, best sellers, etc. Customers can find their local sales support through the "Locate a Sales Rep" interactive territory map.	*

Table 8: Value-Added Attributes

Line Item	Question	Response *	
40	Describe any product, equipment, maintenance, or operator training programs that you offer to Sourcewell participating entities. Include details, such as whether training is standard or optional, who provides training, and any costs that apply.	SeaWestern Sales representatives offer in-person product demonstrations and no charge in-service operator training on purchased products such as Holmatro Rescue Tools, Solo Washers and similar equipment. SeaWestern occasionally hosts manufactures partners to provide informational and product training seminars to customers at no-cost. Often upon coordination with the customer our reps will also assist them with unboxing and recording of product receipt into their records at no charge. SeaWestern does charge a fee for Solo Washer and Circul-Air Equipment set-up that may include connecting components and providing additional small items during installation.	*
41	Describe any technological advances that your proposed products or services offer.	Local SeaWestern Sales Representatives are well versed on the latest technology in the market and carry a wide assortment of current products for hands on demonstration to customers. SeaWestern represents the highest quality products and market leaders, for example: Holmatro Resue Tools with multi-tool functionality increased durability, reduced weight and innovation battery technology. Blackline Safety with its innovation gas detection technology and industry leading connectivity and monitoring systems. For more information, please see attached product catalogs.	*
42	Describe any “green” initiatives that relate to your company or to your products or services, and include a list of the certifying agency for each.	SeaWestern realizes with increasing growth comes increasing inputs into the world. It is our goal to progressively move our organization in policy and process toward a more renewable economic model that avoids depletion of resources and increases Triple Bottom Line value. We address environmental, economic and social goals through reduce/reuse, stakeholder engagement/strategic planning, and job creation for a diverse workforce which all add to the goals of Sustainability. Our management team includes our Director of Operations who has experience and education in the field, holding a Bachelor of Applied Science in Sustainable Practices. In 2019 SeaWestern transitioned its business administration and data completely to the cloud moving from a small business with an analog model and paper heavy environment to a more streamlined digital infrastructure, by implementing full a service ERP system and electronic record management to reduce the amount of paper used. Whenever possible SeaWestern looks to reuse and repurpose materials and equipment. This includes but is not limited to box /packaging materials, storage/furniture, and refurbished tools such as breathing air compressors and steel cylinders. We try to minimize hazardous materials and use local agencies to properly dispose of them. In addition to our current paper/cardboard recycling we are in the process of implementing a more robust recycling and compost program to include other clean recyclables, food waste and paper products (compostable ware, paper towels etc.) that cannot be recycled. To decrease energy consumption, SeaWestern looks for more energy efficient equipment when upgrading (computer etc.) and identifies efficient shipping & bundle methodologies to reduce trips. SeaWestern management works on strategic and sustainable growth strategies to increase economic opportunity and job creation on a regional level. We take a consultative approach with our customers to provide added value before, during and after the acquisition process to ensure a smooth delivery and return on investment during ownership. SeaWestern works closely with our partners and product manufacturers through cooperative planning on operational procedures to increase logistical efficiencies which include growing localized distribution. Specifically in relation to this project, SeaWestern’s partner 3M/Scott has a comprehensive Sustainability / ESG strategy that encompasses Environmental, Social and Governance detailed through highlights, metrics and Global impact reporting which can be found here https://www.3m.com/3M/en_US/sustainability-us/	*
43	Identify any third-party issued eco-labels, ratings or certifications that your company has received for the equipment or products included in your Proposal related to energy efficiency or conservation, life-cycle design (cradle-to-cradle), or other green/sustainability factors.	N/A – As SeaWestern is a distributor/dealer/reseller, these ratings and certifications would be at the manufacturer level. Please see the attached product catalogs under: Dist & Serv Certs_Agreements_Catalogs_Manuals (Zip Folder)	*
44	Describe any Women or Minority Business Entity (WMBE), Small Business Entity (SBE), or veteran owned business certifications that your company or hub partners have obtained. Upload documentation of certification (as applicable) in the document upload section of your response.	N/A	*

45	What unique attributes does your company, your products, or your services offer to Sourcewell participating entities? What makes your proposed solutions unique in your industry as it applies to Sourcewell participating entities?	SeaWestern is a family owned and operated company with over four decades of experience serving the fire service. SeaWestern prides itself on building relationships with the department personnel - like a family, SeaWestern is there when you need us. Our mission is to provide Quality Products at a Reasonable Price with Service After the Sale. The SeaWestern family began 45+ years ago with the vision of Russell E. Morris. It continues today with Steve, running the company. SeaWestern partners with the very best manufacturers to provide quality products to its customers. SeaWestern is proud to represent quality manufacturers such as 3M Scott Fire & Safety SCBA's and TIC's, LION Turnout Gear and Station Wear, BAUER Compressors, HAIX Leather Boots, Elkhart Brass, Key Fire Hose, Holmatro Rescue Tools, Blackline Safety Gas Detection, BlowHard Fans, Red Head Brass, ZICO, and more. We align ourselves with manufacturers that pride themselves on having innovative products that exceed the NFPA standards. In today's world, SeaWestern understands that delivery, in addition to quality and price, matters. With that in mind, we strive to keep a large inventory of the items our customers want on our shelves. We ship all orders received by 1pm the same day. Being centrally located means next day delivery for most of our customers. In addition, we stock a large volume of sought-after merchandise, which enables us to obtain some very attractive volume pricing from our manufacturers; value that we gladly pass along to our customers in the form of reasonable prices. We work hard on our customers' behalf to secure the very best pricing. SeaWestern recognizes that in today's world, we all have a lot of tasks competing for our time. With that in mind, SeaWestern employs full-time, factory-certified mobile technicians available to provide maintenance on your equipment. SeaWestern's commitment to Service after the Sale is further supported by an in-house 3M Scott certified repair center which offers fast turn-around on the repair of 3M Scott SCBA's, flow testing and hydrostatic testing (*Kirkland and Portland locations). In valuing our customer's time, we strive to have a knowledgeable outside sales staff and inside customer service staff; so the customer's call is handled with the first inquiry. We back up that commitment by providing product training seminars for our staff at regular intervals and opportunities for manufacturer provided training.	*

Table 9: Warranty

Describe in detail your manufacturer warranty program, including conditions and requirements to qualify, claims procedure, and overall structure. You may upload representative samples of your warranty materials (if applicable) in the document upload section of your response in addition to responding to the questions below.

Line Item	Question	Response *	
46	Do your warranties cover all products, parts, and labor?	As SeaWestern is a distributor/reseller, warranties fall under the manufacturers for the specific products as each will have different warranty terms. SeaWestern warranties all service labor performed to insure a high level of customer support.	*
47	Do your warranties impose usage restrictions or other limitations that adversely affect coverage?	Misuse restrictions would apply. However, SeaWestern advocates for its customers and works with its manufacturer partners on best outcomes. Please see manufacturer's warranties attached under: Warranty Info (Zip Folder)	*
48	Do your warranties cover the expense of technicians' travel time and mileage to perform warranty repairs?	SeaWestern warranties the service work performed by our service technicians but does not provide product warranty which falls under the manufacturer. Where stated by manufacturer's standard warranty travel time and mileage will be covered. However, this is a rare exception, and typically they are not covered, in such instances the service issue will be handled case by case.	*
49	Are there any geographic regions of the United States or Canada (as applicable) for which you cannot provide a certified technician to perform warranty repairs? How will Sourcewell participating entities in these regions be provided service for warranty repair?	Based on our current manufacturer territory agreements, SeaWestern does not serve beyond Colorado in the central to eastern regions of United States nor any part of Canada. SeaWestern currently provides a certified technician to perform warranty repairs to the territories / states we are authorized to sell in based on the manufacturer. SeaWestern conducts in-person business with 11 western states, including Alaska, Arizona, California, Colorado, Idaho, Montana, Nevada, Oregon, Utah, Washington and Wyoming. SeaWestern does not directly conduct business in Canada.	*
50	Will you cover warranty service for items made by other manufacturers that are part of your proposal, or are these warranties issues typically passed on to the original equipment manufacturer?	As SeaWestern is an authorized service provider for 3M Scott and Holmatro our certified technicians can carry out manufacturer warranty related service requests. For other products within this scope, SeaWestern will work with our partners to identify what warranties and service will be passed on to them as vendors / manufacturers.	*
51	What are your proposed exchange and return programs and policies?	SeaWestern will except returns of new unused products with original packaging within 30 days of receipt. Customized items are nonreturnable. Exchanges are handled on a case-by-case basis.	*
52	Describe any service contract options for the items included in your proposal.	SeaWestern provides several service contract options for the products we offer. For the purpose of this scope, we can provide service plans for Holmatro Rescue Tools that vary from one (1) to five (5) years. Please see example service contract attached under: Dist & Serv Certs_Agreements_Catalogs_Manuals (Zip Folder)	*

Table 10: Payment Terms and Financing Options

Line Item	Question	Response *	
53	Describe your payment terms and accepted payment methods.	SeaWestern has Net 30 terms and payment can be remitted by check, ACH, credit card, and wire transfer.	*
54	Describe any leasing or financing options available for use by educational or governmental entities.	For leasing and financing options SeaWestern refers customers entities to: Blake J. Kaus Vice President & Director of Leasing Community Leasing Partners 215 S. Seth Child Road Manhattan, KS 66502 Division of Community First National Bank – Member FDIC https://www.clpusa.net P: 888.777.7850 M: 785.313.3154 F: 888.777.7875 E: blakekaus@clpusa.net	*
55	Describe any standard transaction documents that you propose to use in connection with an awarded contract (order forms, terms and conditions, service level agreements, etc.). Upload a sample of each (as applicable) in the document upload section of your response.	SeaWestern utilizes Quotes, Sales Orders with Standard Terms & Conditions and Service Agreements in connection with an awarded contract. Please see examples attached under: Standard Transaction Documents (Zip Folder)	*
56	Do you accept the P-card procurement and payment process? If so, is there any additional cost to Sourcewell participating entities for using this process?	SeaWestern accepts credit cards and charges a 3% processing fee on orders over $2,500.	*

Table 11: Pricing and Delivery

Provide detailed pricing information in the questions that follow below. Keep in mind that reasonable price and product adjustments can be made during the term of an awarded Contract as described in the RFP, the template Contract, and the Sourcewell Price and Product Change Request Form.

Line Item	Question	Response *	
57	Describe your pricing model (e.g., line-item discounts or product-category discounts). Provide detailed pricing data (including standard or list pricing and the Sourcewell discounted price) on all of the items that you want Sourcewell to consider as part of your RFP response. If applicable, provide a SKU for each item in your proposal. Upload your pricing materials (if applicable) in the document upload section of your response.	SeaWestern will provide List/MSRP price sheets from the manufacturers and will provide a discount off of List/MSRP as the Sourcewell price. Please see list pricing and discount attached under: Pricing_ (Zip Folder).	*
58	Quantify the pricing discount represented by the pricing proposal in this response. For example, if the pricing in your response represents a percentage discount from MSRP or list, state the percentage or percentage range.	Pricing will vary depending on the vendor. See attachment titled "Sourcewell Discount Structure" for a breakdown of the discounts offered.	*
59	Describe any quantity or volume discounts or rebate programs that you offer.	SeaWestern provides our best pricing based on overall business and cost structures. Any additional volume discounts would be based on promotional pricing on a case-by-case basis.	*
60	Propose a method of facilitating “sourced” products or related services, which may be referred to as “open market” items or “nonstandard options”. For example, you may supply such items “at cost” or “at cost plus a percentage,” or you may supply a quote for each such request.	For customer entities requesting “open market” or “non-standard,” “sourced” products or related services not found on contract, a SeaWestern quote will be supplied upon request.	*
61	Identify any element of the total cost of acquisition that is NOT included in the pricing submitted with your response. This includes all additional charges associated with a purchase that are not directly identified as freight or shipping charges. For example, list costs for items like pre-delivery inspection, installation, set up, mandatory training, or initial inspection. Identify any parties that impose such costs and their relationship to the Proposer.	When applicable SeaWestern provides product in-service training at no cost. For the acquisition of 3M Scott products there are no additional charges. For the acquisition of other related products within this scope there may be additional setup fees which varies depending on the type of product and equipment to be connected and location of setup. The customer entity is responsible for delivery receipt of equipment its final placement, and any associated electrical supply & hook up necessary.	*
62	If freight, delivery, or shipping is an additional cost to the Sourcewell participating entity, describe in detail the complete freight, shipping, and delivery program.	Direct to customer dropship freight is included at no additional charge for 3M Scott products. For all other products and equipment freight is quoted on a case-by-case basis dependent on location and customer requested accommodation. Approximate best method shipping costs are determined by utilizing associated carrier freight calculators and are listed separately on associated quotes.	*
63	Specifically describe freight, shipping, and delivery terms or programs available for Alaska, Hawaii, Canada, or any offshore delivery.	For 3M/Scott products freight is included at no additional charge to Alaska. We do not currently sell to Hawaii or Canada. For all other products and equipment freight is quoted on a case-by-case basis to Alaska (remote locations). We do not currently sell to Hawaii or Canada.	*
64	Describe any unique distribution and/or delivery methods or options offered in your proposal.	SeaWestern has four (4) brick and mortar locations across the western states, that include Kirkland, WA; Portland, OR; Las Vegas, NV; and Denver, CO; that carry varying degrees of inventory to help minimize turnaround time and associated costs. SeaWestern works with a number of national, regional and local carriers to facilitate the best low-cost option based on capacity and location service. As SeaWestern Sales reps frequent departments to provide a high level of service we are often able to hand deliver products to further mitigate costs to the customer.	*

Table 12: Pricing Offered

Line Item	The Pricing Offered in this Proposal is: *	Comments
65	b. the same as the Proposer typically offers to GPOs, cooperative procurement organizations, or state purchasing departments.	

Table 13: Audit and Administrative Fee

Line Item	Question	Response *	
66	Specifically describe any self-audit process or program that you plan to employ to verify compliance with your proposed Contract with Sourcewell. This process includes ensuring that Sourcewell participating entities obtain the proper pricing, that the Vendor reports all sales under the Contract each quarter, and that the Vendor remits the proper administrative fee to Sourcewell. Provide sufficient detail to support your ability to report quarterly sales to Sourcewell as described in the Contract template.	As applicable, SeaWestern will check a box in the NetSuite system on the Quote/Sales Order specifying a Sourcewell contract purchase and note the contract number and participating customer entity number in the associated field. SeaWestern has a designated team assigned to managing our sales through the various cooperative purchase agreements we currently utilize. Contract orders will be reviewed by two parties for accuracy and compliance. Management will review the quarterly report to ensure it adheres to the terms in the Sourcewell contract.	*
67	If you are awarded a contract, provide a few examples of internal metrics that will be tracked to measure whether you are having success with the contract.	If awarded SeaWestern will utilize monthly, quarterly, and year-on-year sale data of the products included on the contract, and conversion rate of quotes done with contract pricing versus those without contract pricing to measure success with the contract.	*
68	Identify a proposed administrative fee that you will pay to Sourcewell for facilitating, managing, and promoting the Sourcewell Contract in the event that you are awarded a Contract. This fee is typically calculated as a percentage of Vendor's sales under the Contract or as a per-unit fee; it is not a line-item addition to the Member's cost of goods. (See the RFP and template Contract for additional details.)	SeaWestern proposes to pay Sourcewell a 1% administrative fee for related quarterly contract sales.	*

Table 14A: Depth and Breadth of Offered Equipment Products and Services

Line Item	Question	Response *	
69	Provide a detailed description of the equipment, products, and services that you are offering in your proposal.	SeaWestern is pleased to offer Sourcewell customers high quality Firefighting Equipment and Rescue Tools with Related Supplies and Accessories which includes: Key Hose - Fire, Municipal & Industrial Hose Elkhart Brass - Fire Nozzles, Tools & Equipment, Municipal & Industrial Fittings Red Head Brass - Fire Hose Adapters, Couplings, Fittings, and Tools Fol-Da-Tank - Portable Water Storage Tanks Blackline Safety - Gas Detection and Connected Safety BlowHard - Positive Pressure Ventilation (PPV) Fans Holmatro - Hydraulic Fire Rescue Tools, Struts and Industrial Equipment Junkyard Dog Industries - Rescue Vehicle Struts Teledyne FLIR - Thermal Imaging Cameras 3M/SCOTT - Thermal Imaging Cameras Rescue Intellitech Solo Rescue - Decon Washer Circul-Air - Hose Washers & Drying, Fire Equipment Storage Chemguard -Fire Suppression Foam, Systems, Mobile Equipment and Hardware Fire Innovations - Belts/Harnesses, Bailout/Search Systems, Rescue & Wildland Equipment Leatherhead Tools - Fire and Rescue Tools Fire Hooks Unlimited - Fire & Rescue Tools, and Emergency Service Equipment SeaWestern has certified 3M/Scott, Bauer and Holmatro in-house and mobile service technicians. SeaWestern technicians are also trained for basic onsite service of the BlowHard Fans and Solo Decon Washer installations. Whenever possible SeaWestern works with its vendor partners to provide customer service and onsite support of the products and equipment offerings.	*
70	Within this RFP category there may be subcategories of solutions. List subcategory titles that best describe your products and services.	Subcategories related to Firefighting Equipment and Rescue Tools with Related Supplies and Accessories include: Firefighting Suppression & Water Flow Equipment: - Key Hose, Elkhart Brass, Fol-Da-Tank, Red Head Brass, Chemguard Foam Fire Pumps, Skid Units, and Compressed Air Foam Systems (CAFS): - None at this time. SeaWestern Fire Apparatus Inc. (In process TBD) Firefighting Attack, Ventilation and Rescue Tools: - BlowHard Fans, Holmatro Thermal imaging and similar Situational Awareness Equipment: - Teledyne FLIR, 3M/SCOTT Extrication Tools and Equipment: Holmatro, Junkyard Dog Struts, Fire Hooks Unlimited, Leatherhead Tools Technical, Vertical, Trench, and Confined Space Rescue Equipment: - Fire Innovations, Holmatro OmniShore/Struts, Hazardous Materials (HazMat) Response Equipment: - Blackline Safety Wildland Firefighting Equipment and Upfits for Vehicles, ATV/UTVs: - KeyHose, Elkhart Brass, SeaWestern Fire Apparatus Inc. Related Tools and Accessories complementary offerings: - Solo, Circul-Air, Red Head Brass, Leatherhead tools, Fire Hooks Unlimited	*

Table 14B: Depth and Breadth of Offered Equipment Products and Services

Indicate below if the listed types or classes of equipment, products, and services are offered within your proposal. Provide additional comments in the text box provided, as necessary.

Line Item	Category or Type	Offered *	Comments	
71	Equipment, tools, supplies, and accessories used for all types of fire and rescue service, including structural firefighting, wildland firefighting, vehicle extrication, technical rescue, vehicle and aircraft rescue, HazMat, and EMS	(•) Yes ( ) No	Key Hose, Elkhart Brass, Fol-Da-Tank, Red Head Brass, Chemguard Foam, SeaWestern Fire Apparatus Inc, BlowHard Fans, Holmatro, Teledyne FLIR, 3M/SCOTT, Holmatro, Junkyard Dog Struts, Fire Hooks Unlimited, Leatherhead Tools, Fire Innovations, Blackline Safety, Rescue Intellitech Solo, Circul-Air	*
72	Firefighting water flow equipment	(•) Yes ( ) No	Key Hose, Elkhart Brass, Fol-Da-Tank, Red Head Brass	*
73	Fire pumps, skid units, and compressed air foam systems (CAFS)	( ) Yes (•) No	SeaWestern Fire Apparatus Inc. TBD	*
74	Firefighting suppression	(•) Yes ( ) No	Key Hose, Elkhart Brass, Fol-Da-Tank, Chemguard Foam	
75	Firefighting attack, ventilation, and rescue tools	(•) Yes ( ) No	BlowHard Fans, Holmatro, Leatherhead Tools, Fire Hooks Unlimited	
76	Thermal imaging and similar situational awareness equipment	(•) Yes ( ) No	Teledyne FLIR, 3M/SCOTT	
77	Extrication tools and equipment	(•) Yes ( ) No	Holmatro, Junkyard Dog Struts, Fire Hooks Unlimited, Leatherhead Tools	
78	Technical, vertical, trench, and confined space rescue equipment	(•) Yes ( ) No	Fire Innovations, Holmatro OmniShore/Struts	
79	Portable ladders	( ) Yes (•) No	We are not offering portable ladders at this time	
80	Hazardous materials (HazMat) response equipment	(•) Yes ( ) No	Blackline Safety	
81	Wildland firefighting equipment and upfits for vehicles, ATV/UTVs	(•) Yes ( ) No	KeyHose, Elkhart Brass	
82	Related tools and accessories complementary to the offering of 1.a.i – x	(•) Yes ( ) No	Solo, Circul-Air, Red Head Brass, Leatherhead tools, Fire Hooks Unlimited	*
83	Complementary services related to the equipment offered in 1. a. i – x. above, including training, testing, certifications, maintenance or repair, installation and warranty programs	(•) Yes ( ) No	SeaWestern has certified 3M/Scott, Bauer and Holmatro in-house and mobile service technicians. SeaWestern technicians are also trained for basic onsite service of the BlowHard Fans and Solo Decon Washer installations. Whenever possible SeaWestern works with its vendor partners to provide customer service and onsite support of the products and equipment offerings.	*

Table 15: Exceptions to Terms, Conditions, or Specifications Form

Line Item 84. **NOTICE**: To identify any exception, or to request any modification, to Sourcewell standard Contract terms, conditions, or specifications, a Proposer must submit the proposed exception(s) or requested modification(s) via redline in the Contract Template provided in the “Bid Documents” section. Proposer must upload the redline in the “Requested Exceptions” upload field. All exceptions and/or proposed modifications are subject to review and approval by Sourcewell and will not automatically be included in the Contract.

Do you have exceptions or modifications to propose?	Acknowledgement *
	( ) Yes (•) No

Documents

Ensure your submission document(s) conforms to the following:

1. Documents in PDF format are preferred. Documents in Word, Excel, or compatible formats may also be provided.

2. Documents should NOT have a security password, as Sourcewell may not be able to open the file. It is your sole responsibility to ensure that the uploaded document(s) are not either defective, corrupted or blank and that the documents can be opened and viewed by Sourcewell.

3. Sourcewell may reject any response where any document(s) cannot be opened and viewed by Sourcewell.

4. If you need to upload more than one (1) document for a single item, you should combine the documents into one zipped file. If the zipped file contains more than one (1) document, ensure each document is named, in relation to the submission format item responding to. For example, if responding to the Marketing Plan category save the document as “Marketing Plan.”

- Pricing - Pricing_.zip - Thursday February 01, 2024 13:59:24
- Financial Strength and Stability - Sea-Western 2023 Financial Statements - FINAL.pdf - Thursday February 01, 2024 10:16:39
- Marketing Plan/Samples - Marketing Plan_.zip - Thursday February 01, 2024 11:26:22
- WMBE/MBE/SBE or Related Certificates (optional)
- Warranty Information - Warranty Info_.zip - Thursday February 01, 2024 15:39:12
- Standard Transaction Document Samples - Standard Transaction Documents.zip - Thursday February 01, 2024 11:30:16
- Upload Additional Document - Dist & Serv Certs_Agreements_Catalogs_Manuals_.zip - Thursday February 01, 2024 15:59:02
- Requested Exceptions (optional)

Addenda, Terms and Conditions

PROPOSER AFFIDAVIT AND ASSURANCE OF COMPLIANCE

I certify that I am the authorized representative of the Proposer submitting the foregoing Proposal with the legal authority to bind the Proposer to this Affidavit and Assurance of Compliance:

1. The Proposer is submitting this Proposal under its full and complete legal name, and the Proposer legally exists in good standing in the jurisdiction of its residence.

2. The Proposer warrants that the information provided in this Proposal is true, correct, and reliable for purposes of evaluation for contract award.

3. The Proposer, including any person assisting with the creation of this Proposal, has arrived at this Proposal independently and the Proposal has been created without colluding with any other person, company, or parties that have or will submit a proposal under this solicitation; and the Proposal has in all respects been created fairly without any fraud or dishonesty. The Proposer has not directly or indirectly entered into any agreement or arrangement with any person or business in an effort to influence any part of this solicitation or operations of a resulting contract; and the Proposer has not taken any action in restraint of free trade or competitiveness in connection with this solicitation. Additionally, if Proposer has worked with a consultant on the Proposal, the consultant (an individual or a company) has not assisted any other entity that has submitted or will submit a proposal for this solicitation.

4. To the best of its knowledge and belief, and except as otherwise disclosed in the Proposal, there are no relevant facts or circumstances which could give rise to an organizational conflict of interest. An organizational conflict of interest exists when a vendor has an unfair competitive advantage or the vendor's objectivity in performing the contract is, or might be, impaired.

5. The contents of the Proposal have not been communicated by the Proposer or its employees or agents to any person not an employee or legally authorized agent of the Proposer and will not be communicated to any such persons prior to Due Date of this solicitation.

6. If awarded a contract, the Proposer will provide to Sourcewell Participating Entities the equipment, products, and services in accordance with the terms, conditions, and scope of a resulting contract.

7. The Proposer possesses, or will possess before delivering any equipment, products, or services, all applicable licenses or certifications necessary to deliver such equipment, products, or services under any resulting contract.

8. The Proposer agrees to deliver equipment, products, and services through valid contracts, purchase orders, or means that are acceptable to Sourcewell Members. Unless otherwise agreed to, the Proposer must provide only new and first-quality products and related services to Sourcewell Members under an awarded Contract.

9. The Proposer will comply with all applicable provisions of federal, state, and local laws, regulations, rules, and orders.

10. The Proposer understands that Sourcewell will reject RFP proposals that are marked "confidential" (or "nonpublic," etc.), either substantially or in their entirety. Under Minnesota Statutes Section 13.591, subdivision 4, all proposals are considered nonpublic data until the evaluation is complete and a Contract is awarded. At that point, proposals become public data. Minnesota Statutes Section 13.37 permits only certain narrowly defined data to be considered a "trade secret," and thus nonpublic data under Minnesota's Data Practices Act.

11. Proposer its employees, agents, and subcontractors are not:
    1. Included on the "Specially Designated Nationals and Blocked Persons" list maintained by the Office of Foreign Assets Control of the United States Department of the Treasury found at: https://www.treasury.gov/ofac/downloads/sdnlist.pdf;

    2. Included on the government-wide exclusions lists in the United States System for Award Management found at: https://sam.gov/SAM/; or

    3. Presently debarred, suspended, proposed for debarment, declared ineligible, or voluntarily excluded from programs operated

by the State of Minnesota; the United States federal government or the Canadian government, as applicable; or any Participating Entity. Vendor certifies and warrants that neither it nor its principals have been convicted of a criminal offense related to the subject matter of this solicitation.

☑ By checking this box I acknowledge that I am bound by the terms of the Proposer's Affidavit, have the legal authority to submit this Proposal on behalf of the Proposer, and that this electronic acknowledgment has the same legal effect, validity, and enforceability as if I had hand signed the Proposal. This signature will not be denied such legal effect, validity, or enforceability solely because an electronic signature or electronic record was used in its formation. - Troy Enright, Director of Operations, Sea-Western Inc.

The Proposer declares that there is an actual or potential Conflict of Interest relating to the preparation of its submission, and/or the Proposer foresees an actual or potential Conflict of Interest in performing the contractual obligations contemplated in the bid.

○ **Yes** ◉ **No**

The Bidder acknowledges and agrees that the addendum/addenda below form part of the Bid Document.

Check the box in the column "**I have reviewed this addendum"** below to acknowledge each of the addenda.

File Name	I have reviewed the below addendum and attachments (if applicable)	Pages
Addendum_1_Firefighting_Equipment_RFP_020124 Fri January 19 2024 12:49 PM	☑	1

Docusign Envelope ID: E38BFB86-ABF4-4BAE-922C-7136FFC80EF4

AMENDMENT #1
TO
CONTRACT # 020124-SEW

THIS AMENDMENT is effective upon the date of the last signature below by and between **Sourcewell** and **Sea-Western Inc.** (Supplier).

Sourcewell awarded a contract to Supplier to provide Firefighting Equipment and Rescue Tools with Related Supplies and Accessories with Related Services to Sourcewell and its Participating Entities, effective April 4, 2024, through April 4, 2028 (Contract).

The parties wish to amend the contract to update Suppliers pricing strategy.

NOW, THEREFORE, the parties amend the Contract as follows:

> Line item 57 of "Table 11: Pricing and Delivery" of the Proposal is deleted in its entirety and replaced with the following:
>
> Supplier will provide a discount off manufacturer List/MSRP as the Sourcewell price as detailed under the Sourcewell Discount Structure 020124-SEW and will provide current manufacturer full price lists upon request.

Except as amended by this Amendment, the Contract remains in full force and effect.

Sourcewell

By: Signed by: Jeremy Schwartz C0FD2A139D06489...

Jeremy Schwartz, Chief Operating Officer

Date: 4/25/2025 | 3:08 PM CDT

Sea-Western Inc.

By: Signed by: Troy M. Enright 03EED1A80930473...

Troy Enright, Director of Operations

Date: 4/25/2025 | 11:10 AM PDT

City of Spokane Fire Department
Spokane, WA
Proposal – Ridgehound Model 1 Wildland Apparatus
October 14h, 2026

Kyle,

Ridgehound Emergency Vehicles is pleased to submit this proposal for three Model 1 Wildland Apparatus for the City of Spokane Fire Department. We appreciate the time and direction you and your team have provided throughout the design process.

The proposed apparatus are built on 2027 Ford F-550 Super Duty 4x4 crew cab diesel chassis, with Buckstop Stage III SRW conversions and Petlas tires. Each features our Model 1 aluminum body with color-matched powder coat, a standard deck and pump layout, and a 400-gallon-class custom poly tank with approximately 441 gallons of water capacity and an integrated foam cell rated at 10 gallons nominally. The pump is a diesel-driven Darley 1.5AGE 24K.

The selected storage and hose arrangement includes driver- and officer-side topside baskets, a forward coffin, dual forward-mounted topside reels, and a single rear 1.5-inch preconnect. Discharges include a 1.5-inch driver-side deck outlet and a 2.5-inch officer-side deck outlet. The apparatus also include the specified Whelen electrical and warning package.

The accompanying customer summary, drawing set, and itemized work-up provide the detailed record of the selected apparatus and pricing basis. This proposal outlines the offered configuration, purchase price, procurement method, production schedule, delivery provisions, and supporting documentation. Ridgehound Emergency Vehicles appreciates the opportunity to submit this proposal and looks forward to continuing the project with the City of Spokane Fire Department.

Sincerely,



Jordan Koffler
Director of Production & Operations
Ridgehound Emergency Vehicles

Proposal Summary

Ridgehound Emergency Vehicles proposes three Model 1 Wildland Apparatus to fulfill the requirements of the City of Spokane Fire Department. Full written specifications, drawings, and supporting documentation are included with this proposal.

A detailed description of the proposed apparatus is provided in the attached customer summary, main print, and external work-up. Purchase pricing is specified below.

Ridgehound Emergency Vehicles proposes the following apparatus to meet City of Spokane Fire Department operational requirements.

Unit	GSO	Configuration	Production Window	Sales Price
1	27107	2027 Ford F-550 4x4 Ridgehound Model 1 Wildland Apparatus	FEB-APR 2027	$334,778.73
2	27108	2027 Ford F-550 4x4 Ridgehound Model 1 Wildland Apparatus	FEB-APR 2027	$334,778.73
3	TBD	2027 Ford F-550 4x4 Ridgehound Model 1 Wildland Apparatus	TBD	$334,778.73

Total: $1,004,336.19 for thtrr units completed in accordance with the finalized City of Spokane Fire Department configuration. The total above does not include state sales tax. Yakima MVT tax rate of 9.1% shall be added to the completed project. If the Buyer claims an exemption from any tax assessed in this transaction, Buyer agrees to furnish the applicable exemption certificate to the Company and to hold Company harmless from any damage which may result from the Company ultimately having any such tax assessed against it.

The sales price includes the apparatus configuration shown in the attached project documents and engineering. No delivery costs or final inspection travel costs are included. Any subsequent revisions or additions requested after final configuration review will be addressed through the project change process.

Purchase Mechanism

This purchase is proposed through Ridgehound Emergency Vehicles' awarded Sourcewell cooperative purchasing contract, Contract #020124-SEW. Utilizing this cooperative purchasing vehicle allows agencies to satisfy competitive procurement requirements while streamlining the acquisition process and reducing administrative burden.

Ridgehound Emergency Vehicles has been competitively awarded under the Sourcewell procurement process, providing participating agencies with access to pre-negotiated pricing, standardized terms and conditions, and a nationally recognized cooperative purchasing program.

Supporting Sourcewell contract documentation and award information are available upon request. Ridgehound will work with City of Spokane Fire Department to provide the documentation needed for its purchasing process.

Delivery Plan

Ridgehound anticipates Q1 2027 production with April 2027 delivery apparatus, subject to final configuration release, chassis availability, and production scheduling. Ridgehound will provide the department with formal production and completion updates as the project moves through the build process.

The City of Spokane Fire Department will be invited to conduct a final inspection and acceptance review at the Ridgehound Emergency Vehicles facility in Yakima, Washington prior to delivery. During this visit, Ridgehound personnel will provide apparatus orientation and system familiarization for department representatives.

No delivery costs or final inspection travel costs are included in the proposal price. Delivery and any final inspection travel arrangements may be coordinated separately with the department as the project approaches completion.

The attached customer summary, drawing package, and itemized work-up should be reviewed as part of the complete proposal packet. These documents define the configuration offered and will form the basis for the final purchase agreement.

Company Qualifications

Ridgehound Emergency Vehicles has been involved in the fire service industry for more than eighty years and specializes in the design, sales, and support of apparatus and emergency vehicles for fire departments throughout the western United States. As part of the MES family of companies, Ridgehound provides customers access to broad apparatus resources, engineering support, and expanded nationwide service capabilities.

The Ridgehound Emergency Vehicles Model 1 apparatus proposed in this submission is a purpose-built wildland suppression platform incorporating proven components, rugged aluminum construction, simplified maintenance requirements, and firefighter-focused functionality for demanding off-road environments.

Ridgehound also provides ongoing technical support and coordination with manufacturing and component partners to assist departments with apparatus operation, maintenance, warranty coordination, and replacement parts support as needed.

QUICK SPECIFICATIONS - CUSTOMER SUMMARY

Agency Name	CITY OF SPOKANE FD	Date	9/16/2026
Contact Name	KYLE CHASE	Salesperson	STEVE WICKWIRE
Contact Phone	N/A	Equipment Rep	N/A
		Project Manager	JORDAN KOFFLER
Contact Email	KCHASE@SPOKANECITY.ORG		

CHASSIS

FORD F550 : INCLUDED SWEV STD

2027 FORD F550 SUPERDUTY CREW CAB. 4X4, 179" WB, 60" CA, DRW, 19,500 GVW, 6.7L POWERSTROKE DIESEL, RACE RED, FIRE PREP PKG.

DRIVETRAIN / SUSPENSION

BUCKSTOP SRW CONV : STAGE III CONVENTIONAL / FORD

BUCKSTOP SINGLE REAR WHEEL CONVERSION KIT INSTALLED TO CHASSIS. CONVERSION KIT INCLUDES: 5 TIRES & WHEELS, HIGH ARCH FENDER FLARES AND BODY MODIFICATIONS, OUTBACK BUMPER (WIDE), 3.5" SUSP. LIFT, SPEEDO, ABS, TRACTION CONTROL CALIBRATION MODULE / CORRECTION, RADFLO REMOTE RESERVOIR TUNED PERFORMANCE 2.5" SHAFT SHOCKS

REAR DECK CONFIGURATION

STANDARD

STANDARD REAR DECK SELECTION - NO L3 COMPARTMENT, PUMP TO DS RADIATOR OUT, ALLOWS TS ACCESS AND EXPANDED SELECTIONS

HOSE REEL MODEL

TOPSIDE DUAL

DUAL HANNAY MODEL: EF4038-17-18 (LT & RT) 12V ELECTRIC REWIND HOSE REELS MOUNTED TO TOP OF BODY ON LH & RH SIDES PER CONFIGURATION. PAINTED BLACK, 1" NH OUTLET THREADS, W/ STANDARD SPOOL STYLE ROLLER ASSEMBLIES

CAPACITY: 125' 1" / 200' 3/4

L3 POSITION

L3 HEX PUNCH - STANDARD

HEX PUNCH FASTBACK ENCLOSURE GUARD INSTALLED TO L3 BODY POSITION. POWDERCOATED JOB COLOR

R3 POSITION

R3 COMPARTMENT - STANDARD

LIFT DOOR TOPSIDE COMPARTMENT INSTALLED TO R3 BODY POSITION. (32"W X 31.5"H X 18"D): VERTICAL LIFT DOOR WITH DUAL GAS SHOCKS. (2) ADJUSTABLE SHELVES, D RING HANDLE, COMPARTMENT CIRCLE VENT AND LOUVER ASSY.

CTECH SINGLE ENCLOSED 6"D DRAWER INSTALLED TO BASE OF R3 COMPARTMENT FOR ADAPTER & APPLIANCE STORAGE.

TOPSIDE PRECONNECT(S)

SINGLE REAR - ELECTRIC CONTROL

SINGLE REAR PRECONNECT TRAY INSTALLED TO TOPSIDE OF TANK ON OFFICER SIDE, EXTENDING OVER TOP OF TANK AND TO REAR THRESHOLD OF PLUMBING STEP. VERTICAL PLUMBING TO BE ENCLOSED IN SHROUD SUPPORTING TRAY EXTENDING FROM TOP OF STEP. PRECONNECT VALVE TO BE CONTROLLED W/ AKRON MINI NAVIGATOR AT REAR OF APPARATUS IN PUMP CONTROL AREA OR ON STEP / SHROUD SURFACE. PRECONNECT TRAY TO BE POWDERCOATED BK62 W/ COVER AND FLAP.

TOPSIDE - FRONT CROSSFRAME DUNNAGE

COFFIN BOX - STANDARD

TOPSIDE FRONT COFFIN BOX INSTALLED OVER L1/R1 TRANSVERSE (48"W X 18"D X 12"H). T LATCH HANDLE ON LID SURFACE, HINGED CAB SIDE, GAS SHOCK ASSIST, POWDERCOAT BK62

TOPSIDE - LH DUNNAGE

LH: 40.5" BASKET (REEL FWD, NO L3)

TOPSIDE BASKET HEX PUNCH 40.5" X 18" X 12" PC BK62 (SMOOTH OUTER FACE TO OUTSIDE)

TOPSIDE - RH DUNNAGE

RH: 60.5" BASKET (REEL FWD, W/ R3)
TOPSIDE BASKET HEX PUNCH 60.5" X 18" X 12" PC BK62 (SMOOTH OUTER FACE TO OUTSIDE) REAR HEXES REMOVED FOR HANDLE AND LIGHT MOUNTING
INTEGRATED ANGLED HANDLE AND ENCLOSURE ON OUTSIDE

PUMP CONTROL SYSTEM

DARLEY EGOV DIGITROL (24K)
DIGITROL+ MAIN PANEL: DUAL DIGITAL READOUT INTERFACES W/ HOUR MEETER, OIL PSI, ENG COOLANT TEMP, VOLT METER, AND DIGITAL PRESSURE, ELECTRONIC THROTTLE, PUSH BUTTON PRIMER,
INTEGRATED PRESSURE GOV, INTEGRATED AUTO SHUTDOWN: LOW OIL PRESSURE & LOSS OF WATER

FOAM SYSTEM

TRIDENT ATP
TRIDENT FOAMATE 1.0 CLASS A ATP FOAM SYSTEM
BRASS HOUSING, PROPORTIONER STYLE - MOUNTED TO PLUMBING STEP FACE OR TO PUMP CONTROL AREA
INLINE 1/4 TURN VALVES FOR FOAM TANK DRAIN AND FOAM SUPPLY CONTROL
INSTALLED WITH FLEXIBLE PUSH TUBING, COLOR CODED FOR APPLICATION

PUMP

STANDARD CONFIG: DARLEY 1-1/2AGE24K 3.17 RATIO EGOV
DARLEY 1-1/2AGE 24K PUMP (3.17 RATIO) EGOV 2026+
HIGH PRESSURE, LOW VOLUME, GEAR DRIVEN, KUBOTA D902 DIESEL 24HP, LIQUID COOLED
STAINLESS STEEL WELDED PLUMBING, VICTAULIC GROOVES & COUPLINGS WHERE NECESSARY - AKRON 2.5" TANK-PUMP AND SUCTION VALVES, FABRICATED VALVE STANDS, FUNCTION LABELS, ETC
TANK-PUMP LINKAGE CONTROLLED THROUGH VALVE STAND

L1/R1 TRANSVERSE

OPTION 1: 400G / 18"
TRANSVERSE OVERSLUNG CROSS FRAME L1 / R1 COMPARTMENT, NOTCHED CENTER AT 18"D TO ACCOMODATE 400 GAL POLYTANK. SWING DOOR - HINGED CAB SIDE W/ GAS SHOCK, FIXED SHELF AT THRU SECTION MIDPOINT, D RING HANDLES (BLACK)
51.5" (31.5" TOPSIDE) H X 26"(18" THRU SECTION)W X 18"/SIDE (+60" THRU SECTION) D

STRIPING / GRAPHICS

CUSTOM GRAPHICS
GRAPHICS TO BE INSTALLED PER CUSTOMER SPECIFICATIONS. PROOFS TO BE PROVIDED AND APPROVED. CUSTOM QUOTE REQUIRED [PER DEPT REQUIREMENTS].

CHASSIS FINISH

FACTORY
CHASSIS FINISH TO BE FACTORY OEM PAINT COLOR

RADIO INSTALLATION

SINGLE INSTALL, DEPT SUPPLIED RADIO KIT
INSTALL DEPT SUPPLIED RADIO UTILIZING DEPT SUPPLIED ANTENNA BASE + COAX KIT - SINGLE RADIO INSTALL TO HAVIS (DOES NOT INCLUDE PROGRAMMING) DEPT TO SPECIFY ANTENNA PLACEMENT AND PROVIDE RADIO MODEL #

TIRES

BUCKSTOP SRW: PETLAS
335/80R20 PETLAS RM910 TIRES (5) - INCLUDED WITH BUCKSTOP SRW CONVERSION KIT AS STANDARD

WHEELS

BUCKSTOP SRW CONV ALUM WHEELS
11"X20" BUCKSTOP REVERSIBLE DOT ALUM WHEELS (5)
POWDERCOATED BLACK W/ MACHINED ACCENTS

BUMPER

BUCKSTOP SRW: FORD F550 KIT BUMPER

BUCKSTOP CONVERSION KIT HEAVY DUTY BUMPER WITH BRUSH GUARD [OUTBACK]. FULL TIRE COVERAGE, WINCH MOUNTING PLATE ASSY, 6" ROUND LIGHT CUTOUTS, DITCH LIGHT CUTOUTS. POWDERCOATED HAMMER BLACK - BK62

WINCH

WARN 16.5 TI, W/ SYNTHETIC CABLE (16,500 LB)

WARN 16.5 TI 16,500 WINCH W/ SYNTHETIC CABLE INSTALLED IN BUCKSTOP FRONT BUMPER

CENTER CONSOLE

30" FORD 13.3" CONSOLE ASSY SINGLE RAD NO PUMP CONT

HAVIS 30" FORD VSW CONSOLE: RELOCATE OEM POWER POINTS TO FACE, DUAL CUPHOLDERS, DUAL ARMRESTS, STORAGE POCKETS, ACCESSORY PLATES, & FILLER PLATES TO ACCOMMODATE SELECTIONS
SINGLE RADIO, NO IN CAB PUMP CONTROLS (DEPT SPECIFY RADIO)

HPI MODEL 1 BODY BASE

HPI MODEL 1 BODY BASE

HPI MODEL 1 BODY BASE ASSY: ALUM REVERSED C CHANNEL FLATBED DECK, SMOOTH FRAME, SQUARE CORNER, NOTCHED FORWARD DECK CORNERS. STRAIGHT CORNER TAILBOARD W/ FULL WIDTH APRON STEP. FENDER SKIRTS, FENDER FLARES, BODY FRONT OVERLAY [ROCK GUARD], MUDFLAP KIT, DEF & DIESEL FILL KITS, DOT LIGHTING KIT, APRON HOSE BOX, L2 & R2 TOPSIDE COMPARTMENTS INCLUDED IN STANDARDIZED BODY ASSY (56"W X 31.5"H X 18"D): VERTICAL LIFT DOOR WITH DUAL GAS SHOCK, ADJUSTABLE SHELF, D RING HANDLE, COMPARTMENT CIRCLE VENT AND LOUVER ASSY.

AFT OF AXLE UNDERBODY

GUSSET ASSEMBLY (STANDARD)

3/16 ALUMINUM GUSSETED REAR FLATBED UNDERBODY AFT OF AXLE ENCLOSURE KIT. DOUBLE ANGLE INWARD TO TIE FLATBED DECK TO APRON & DEFLECT FROM APRON.

TOPSIDE OVERLAY

MODEL 1 STANDARD TANK GRIP OVERLAY (400G / 500G)

TEXTURED TOPSIDE DIAMOND TREAD PLATE OVERLAY INSTALLED TO TOP OF TANK AND TRANSVERSE COMPARTMENT TO FRONT OF BODY. OVERLAY TO BE NOTCHED FOR FILL TOWERS AND TOPSIDE PLUMBING DISTRIBUTION OUTLETS. OVERLAY MOUNTS TO TANK THREADED INSERTS. INTEGRADED D RINGS SPACED FOR SPARE TIRE RETENTION.
WALKWAY TO BE POWDERCOATED PRISMATIC SUPERGRIP BLACK PTB-6419

TOPSIDE ACCESS

MODEL 1 MODULAR STEP W PRECONNECT VERT ENCLOSURE / RISER

ENCLOSED TOPSIDE ACCESS STEP INSTALLED OVER OFFICER SIDE DISCHARGE DISTRIBUTION AGAINST TANK & R3 COMPARTMENT. STEP NOTCHED FOR PLUMBING, VALVE CONTROLS / LINKAGES, FUNCTION CONTROLS THROUGH FACE (A/N), CUT AND FORMED .188 3003 DIAMOND PLATE TOP STEP (PRISMATIC PTB-6419), .190 5052 SIDE WALL SUPPORT (JOB COLOR)
ACCESS DOOR ON FRONT OF STEP HINGED W/ SOUTHCO C2 LATCHES TO ALLOW FOR SERVICE / STORAGE / ACCESSORY COMPONENTS
VERTICAL PLUMBING SHROUD FOR TOPSIDE PRECONNECT WITH ENGINE PROTECTION ENCLOSURE - PC BK62

TOPSIDE TIRE MOUNT

TRIPLE LOOPS & Y STRAP TO CATWALK

STANDARD TOPSIDE SPARE TIRE RATCHETING Y STRAP, FASTEN SPARE TO TOPSIDE TANK WALKWAY D RINGS

L1/R1 TRANSVERSE ACCESSORIES

NONE

NO ADDED ACCESSORIES TO L1/R1 TRANSVERSE COMPARTMENT

L2 OR R2 COMPARTMENT ACCESSORIES

NONE

NO ADDED ACCESSORIES TO L2 OR R2 COMPARTMENTS

REEL ENCLOSURE

NONE
NO REAR DECK HOSE REEL ENCLOSURES TO REA OF APPARATUS

BODY FINISH

POWDERCOATING - STANDARD
ENTIRE MODEL 1 BODY TO BE POWDERCOATED AS FOLLOWS:
JOB COLOR: FLATBED DECK, APRON, RAILS, COMPARTMENTS INSIDE & OUTSIDE, HEX PUNCH GUARDS, ETC
BLACK BK62: SHELVES, ACCESSORY COMPONENT, STEPS, FENDER FLARES, TOPSIDE COFFIN BOXES, TOPSIDE BASKETS, DOOR HANDLES, CROSSFRAME ROCK GUARD, ETC

BACK UP CAM

INSTALL FACTORY CAM TO BODY / WIRE TO DISPLAY
FACTORY SUPPLIED BACK UP CAMERA TO BE PLACED AT REAR OF BODY AND INTEGRATED TO HEAD UNIT WITH OEM PROVIDED COMPONENTS AND WIRING HARNESS.

CAB STEPS

FACTORY
FACTORY CAB STEPS TO BE UTILIZED.

BODY SIDE STEPS

BODY - SIDE ZICO (EA SIDE)
(2) ZICO PS-8 MANUAL PULL OUT STEPS INSTALLED UNDER L1 & R1 AT REAR BOTTOM EDGE, TO ACCESS TOPSIDE DISCHARGES OR CARGO

BATT CHARGER

KUSSMAUL CHIEF 4012
KUSSMAUL CHIEF SERIES BATTERY CHARGER W/ BUILT IN TOUCH DIISPLAY AND COMMUNICATIONS. IP32 RATED, PLC LOAD COMPENSATION BUILT IN. CHARGER MOUNTED TO INSIDE WALL OF TRANSVERSE COMPARTMENT, L1 SIDE. INPUT FROM SHORELINE INLET AND OUTPUT TO BATTERY WIRING TO BE COVERED WITH Z FLANGE ALUMINUM WIRING COVER.

AUTO EJECT

CUSTOM - SPOKANE
NOCO 329-GCP1EX AC PORT SHORELINE INLET, 12-INCH LEAD, BLACK. MOUNT TO REAR BEDRAIL IN PLACE OF TRADITIONAL AUTO EJECT.

120V OUTLET(S) BODY - SHORELINE

SINGLE: L2 OR R2 COMPARTMENT [SPEC]
SINGLE 120V SHORELINE POWER OUTLET TO BE ADDED TO EITHER L2 COMPARTMENT IN UPPER FORWARD INSIDE CORNER.
2 GANG 20A GFCI OUTLET W/ IN USE COVER, WIRE IN 1/2 FLEX CONDUIT FROM BATTERY CHARGER TO SHORELINE OUTLET.

INVERTER POWER 2KW

NONE
NO FACTORY INVERTER SYSTEM

MASTER BATTERY

RED ETCHED ROCKER
STANDARD MASTER POWER SWITCH TO SUPPLY POWER TO ALL NON OEM ACCESSORIES (LESS LOADS WIRED TO CONSTANT BATTERY PER DEPT SPECIFICATIONS). ROCKER SWITCH INSTALLED TO CONSOLE WITH RED ETCHED COVER "MASTER POWER" AND STAINLESS STEEL SWITCH SHROUD GUARD.

CORE ELECTRICAL DISTRIBUTION

STANDARD
STANDARD CORE ELECTRONICS DISTRIBUTION AND POWER MANAGEMENT. CENTRALIZED AND LABELED FUSE BLOCKS, RELAYS, ELECTRICAL COMPONENT MOUNTING, SOLENOIDS, HEAVY GAUGE WIRE DISTRIBUTION AND JUNCTIONS / TERMINALS / CONNECTORS AS NEEDED TO COMPLETE.

DOOR AJAR SYSTEM

CAB & BODY DOORS, AUDIBLE + VISUAL

STANDARD DOOR AJAR: RED LIGHT AND BUZZER INSTALLED TO CENTER CONSOLE. SYSTEM TO ALERT DOOR AJAR FOR ALL BODY DOORS THROUGH COMPARTMENT LIGHTING PRESSURE SWITCH CIRCUIT AND CAB DOORS THROUGH OBDII INTEGRAITON.

SCENE LIGHT SWITCHING

CAB & PUMP PANEL

SCENE LIGHT SWITCHING - ALL SCENE AND WORK LIGHTS TO BE CONTROLLED FROM PUSH BUTTONS ON CCTL7 W/ CLEARLY LABELED & BACKLIT CONTROLS. TOPSIDE WORK LIGHTS, REAR SCENE LIGHTS, DRIVER BODY SCENE LIGHTS, AND OFFICER BODY SCENE LIGHTS TO BE SWITCHED FROM BOTH CAB AND AT PUMP PANEL [ON OR OFF EITHER POSITION]. PUMP PANEL SWITCHES TO HAVE ETCHED COVERS FOR FUNCTION AND BACKLIT - BOTTOM LEFT IN ROW ON PUMP PANEL.

FRONT FOG LIGHTING

BAJA DESIGNS AMBER

BAJA DESIGNS LP6 PRO AMBER RND FOG/DRIVING LIGHTS INSTALLED IN BUMPER ROUND CUTOUTS

FRONT BUMPER SCENE LIGHTING

DUAL PODS

(2) WHELEN NP6BB NANO PIONEER LED POD LIGHTS MOUNTED TO FRONT BUMPER WITH BLACK ANGLE BRACKETS.

BODY FRONT SCENE LIGHTING

WHELEN NP6BB BODY FRONT UPPER CORNERS (EA SIDE)

(2) WHELEN NP6BB NANO PIONEER LED POD LIGHTS MOUNTED TO FRONT UPPER OUTSIDE CORNERS OF BODY [1/SIDE], ON ANGLED PEDASTAL BASE. LIGHTS DIRECTED AT DIAGONAL AWAY FROM VEHICLE

DRIVER SCENE LIGHTING

LIGHTBAR - BAJA

BAJA DESIGNS S8 20" LED LIGHT BAR MOUNTED TO LH TOPSIDE STORAGE

OFFICER SCENE LIGHTING

LIGHTBAR - BAJA

BAJA DESIGNS S8 20" LED LIGHT BAR MOUNTED TO RH TOPSIDE STORAGE

REAR WORK LIGHTING

WHELEN NP6BB UPPER REAR (DUAL) + WHELEN WORKSIDE (DUAL)

(2) WHELEN NP6BB NANO PIONEER PODS AT REAR UPPER BODY, INBOARD OF REAR UPPER WARNING LIGHTS.
(2) WHELEN WORKSIDE SCENE LIGHTS UNDER TOPSIDE BASKETS, REAR-FACING, TIED TO REAR WORK LIGHTS.

TOPSIDE WORK LIGHTING

STANDARD: 5 X 9" SUNSTRIP W/SHROUD

TOPSIDE WORK / ACCESS LIGHTING - 9" FRC SUNSTRIP (5) DISTRIBUTED TO ILLUMINATE TOPSIDE OF APPARATUS AND ACCESS / WALKWAY & STEP. EXPOSED LIGHTS TO HAVE PROTECTIVE SHROUD COVER POWDERCOATED BK62.

ROCK LIGHTS

NONE

NO ROCK LIGHTS TO BE INSTALLED.

GROUND LIGHTING

APRON & TRACER

TRACER WHITE FUNCTION AS CAB DOOR LIGHTING; (2) ROM 12-INCH V5 WHITE GROUND LIGHTS UNDER APRON.

COMPARTMENT LIGHTING

MODEL 1 STANDARD / FRC SUNSTRIP

FRC SUNSTRIP STANDARD COMPARTMENT LIGHTING AT DOOR THRESHOLD AS FOLLOWS
TOPSIDE LIFT DOOR COMPARTMENTS: 27" [1 / SIDE]
L1/R1 TRANSVERSE: 45" ON LH AND RH DOOR, LATCH SIDE
ADDED CENTER: 45" AT TOP OF TRANSVERSE FORWARD UPPER EDGE. 45" UNDER SHELF

ARGES SYSTEM / REMOTE LIGHT

NONE
NO WHELEN ARGES REMOTE SPOTLIGHT SYSTEM INSTALLED

SYSTEM / CONTROLLER

CENCOM CORE WCX C399 & CCTL7 21& SLIDE CONTROLLER, 3X CEM16 EXPANSION MODULES
WHELEN CENCOM CORE WECAN X CONTROL SYSTEM, CCTL7 CONTROL HEAD, AND (3) CEM16 EXPANSION MODULES - 1 UNDER HOOD FOR FRONT ELECTRONICS, 2 IN PUMP PANEL FOR REAR ELECTRONICS. DVI, V2V, VSG, WHELEN CLOUD, WECANX CAPABLE.
INTEGRATED SYSTEM TO CONTROL ALL EMERGENCY WARNING, SCENE, AND LOAD OUTPUT FUNCTIONS THROUGHOUT APPARATUS.

PROGRAMMING

STD HARNESSES
PROGRAMMING AND INTEGRATION TO STANDARD UNLESS OTHERWISE DISCUSSED W AGENCY
PUSH BUTTON SCENE AND WORK, TOP ROW SIREN FUNCTIONS, PROGRAM H/F MODE AND TIE TO FACTORY HORN, OBDII INTEGRATE FOR PARK KILL FUNCTIONS VIA WHELEN SCANPORT, STD SLIDE SWITCH FLASH PATTERNS, ETC)UTILIZING J5 & J6 OUTPUTS FROM CEM16 (X3) AND DIRECT C399 CONNECTIONS. ALL REMOTE MODULES TO CONNECT TO CENCOM VIA J7 DATA HARNESSES

LIGHT BEZEL FINISH

BLACK
ALL WARNING LIGHT SHROUDS TO BE BLACK

LIGHTBAR

WHELEN LIBERTY II WCX (FORD CHASSIS)
WHELEN LIBERTY II 54" LIGHTBAR W/ FORD F550 MOUNTING STRAP KIT. MOUNTED FRONT CAB, DUO RED / WHITE MODULES FRONT, DUO RED / AMBER MODULES REAR, RED / WHITE DUO CORNER MODULES, LEFT & RIGHT ALLEY LIGHTS, FRONT TAKEDOWNS
WHITE FUNCTIONS SWITCHED AS SCENE LIGHTS: FRONT SCENE, TAKE DOWN, L ALLEY, R ALLEY

SIREN SPEAKER

F550 GRILL MNT, SA315P
WHELEN SA315P SIREN SPEAKER INSTALLED BEHIND GRILL W/ SUPER DUTY VEHICLE SPECIFIC SPEAKER MOUNT

FRONT LOWER WARNINGS

M6 R/W DUO, CLR LENS
FRONT LOWER WARNING INSTALLED TO FRONT BUMPER, TOWARDS OUTSIDE - FORWARD FACING
WHELEN M6 SERIES RED W/ CLEAR LENS

FRONT LOWER WARNING BEZELS

M6 BLACK
BLACK FLANGE BEZEL FOR M6

FRONT GRILL WARNINGS

T SERIES R/W DUO, CLR LENS
FRONT GRILL WARNING INSTALLED TO BUMPER UPRIGHTS - FORWARD FACING
WHELEN T SERIES RED / WHITE DUO W/ CLEAR LENS

INTERSECTION WARNINGS

M2 RED, CLR LENS

WHELEN M2 SERIES ML2RC (CLR) RED INTERSECTION WARNING LIGHTS, MOUNTED TO FRONT FENDER EA SIDE NEAR TOP OF WHEEL ARCH, FACING LEFT AND RIGHT OF APPARATUS.
RED W/ CLEAR LENS.

INTERSECTION WARNING BEZELS

M2 BLACK
WHELEN M2 BLACK FLANGE BEZELS.

MIDSHIP WARNINGS

M2 RED, CLR LENS
WHELEN M2 SERIES ML2RC (CLR) RED MIDSHIP LIGHTS, (4) AT FRONT AND REAR OUTSIDE BEDRAIL CORNERS, FACING LEFT AND RIGHT OF APPARATUS.
RED W/ CLEAR LENS.

MIDSHIP WARNING BEZELS

M2 BLACK
WHELEN M2 BLACK FLANGE BEZELS.

DRIVER REAR LOWER WARNING

DS: M2 RED/BLUE
WHELEN M2 SERIES ML2DJ (CLR) RED/BLUE DUO, DS REAR LOWER WARNING MOUNTED TO BEDRAIL NEAR DOT LIGHT.

OFFICER REAR LOWER WARNING

OS: M2 RED/BLUE
WHELEN M2 SERIES ML2DJ (CLR) RED/BLUE DUO, OS REAR LOWER WARNING MOUNTED TO BEDRAIL NEAR DOT LIGHT.

REAR LOWER WARNING LIGHT BEZELS

M2 BLACK
WHELEN M2 BLACK FLANGE BEZELS.

DRIVER REAR UPPER WARNING:

DS: M4 RED/BLUE (CUSTOM - SPOKANE)
WHELEN M4DJ (CLR) RED/BLUE, DS REAR UPPER WARNING AT TOPSIDE BASKET OUTER REAR CORNER, REAR-FACING.

OFFICER REAR UPPER WARNING:

OS: M4 RED/BLUE (CUSTOM - SPOKANE)
WHELEN M4DJ (CLR) RED/BLUE, OS REAR UPPER WARNING AT TOPSIDE BASKET OUTER REAR CORNER, REAR-FACING.

REAR UPPER WARNING LIGHT BEZELS

M4 BLACK
WHELEN M4 BLACK FLANGE BEZELS.

SYNC MODULE

NONE
NO WHELEN VEHICLE TO VEHICLE SYNC SYSTEM

OPTICOM

NONE
NO OPTICOM INCLUDED OR INSTALLED

HOWLER SYSTEM

NONE
NO WHELEN HOWLER SYSTEM

BODY SIDE UPPER WARNING

T SERIES RED, CLR LENS (SPOKANE - CUSTOM)
(2) WHELEN T-SERIES TL1R (CLR) RED, AT FORWARD OUTER TOPSIDE BASKET CORNERS;
BODY SIDE UPPER WARNING BEZELS: T SERIES / NONE

REAR TRAFFIC ADVISOR

NONE

NO REAR TRAFFIC ADVISOR INSTALLED

TRACERS - CAB

TRACERS

WHELEN 5-LAMP RED/WHITE TRACER ASSEMBLIES (2), ONE ON EACH SIDE OF CAB.

POLY TANK

UPF 400 GAL - MOD 1 STD

MODEL 1 440 GALLON RECTANGULAR POLY TANK: 10 GAL INTEGRATED FOAM CELL, MOUNTING BACK, NUT INSERTS FRONT BOTT, TOPSIDE MOUNTING TAPS FOR WALKWAY
FOAM AND WATER FILL TOWERS ON DS EDGE, INLINE, WATER FILL ON TANK MIDLINE FORWARD OF FOAM CELL
UPPER RIGHT CORNER NOTCHED FOR TOPSIDE DISCHARGE OUTLETS, TANK SLEEVED FOR TOPSIDE DISTRIBUTION
59"W X 64"+2"L X 31.5" H

PRIMER

DARLEY 12V FLUIDLESS (PULL TO PRIME)

DARLEY FLUIDLESS VANE 12V PRIMER, INSTALLED UNDER BODY. PRIMER FUSED W/ 400A MEGA BOLT STYLE FUSE UNDER HOOD. PRIMER CONTROL W/ PULL STYLE HANDLE MOUNTED TO REAR BEDRAIL

PUMP PANEL BOX OPTIONS

SWEV STANDARD BOX

INTERNAL PUMP PANEL CONTROL BOX, W/ LED PANEL LIGHT, POWDERCOAT BK62

PUMP PANEL FACE OPTIONS

FACE 1: DARLEY EGOV

REMOVEABLE PANEL FACE FOR DARLEY EGOV CONTROLS, BLACK FINISH WITH ETCHED FUNCTION LABELS

SUB PANEL BOX OPTIONS

SWEV EXPANSION PIGGYBACK PANEL & BLANK FACE

SUB PANEL BOX INCLUDED FOR EXPANDED CONTROLS
FACE TO BE CUT FOR JOB SPECIFIC CONTROL MOUNTING NEEDS PER ENGINEERED DESIGN

RECIRC COOLER SYSTEM & CONTROL / FOAM CONTROL

SWEV 4 WAY PUMP COOLER AND FOAM SUPPLY SYSTEM

4 POSITION VALVE COMBINATION PUMP COOLER, FOAM SUPPLY, AND FOAM FLUSH CONTROLS. VALVE MOUNTED TO PUMP CONTROL PANEL FACE WITH POSITION ETCHED LABELING. SUPPLY RECIRCULATING PUMP COOLER MODE, MODE OFF TO FOAM SUPPLY, MODE OFF TO FOAM FLUSH, REPEAT - ELLIMINATE TANK FOAM OUT FROM ATP FOAM SYSTEM.

FRONT DISCHARGE

NONE

NO FRONT BUMPER DISCHARGES INCLUDED AS CONFIGURED

GROUND SWEEPS

NONE

NO FRONT GROUND SWEEPS INSTALLED.

PUMP FUEL SOURCE

CHASSIS DIESEL (24K)

CHASSIS DIESEL FUEL TANK FOR FUEL SUPPLY TO PUMP: UTILIZE UPFITTER FUEL PICK UP & RETURN

PUMP REMOTE OIL

KUBOTA 24 DSL REMOTE OIL

REMOTE OIL FILTER AND DRAIN KIT FOR 24K DIESEL PUMP

WATER LEVEL GAUGE

FRC TANKVISION PRO 400 WATER

STANDARD: FRC TANKVISION PRO WATER LEVEL GAUGE (PRIMARY), TRANSDUCER, INSTALLED TO PUMP PANEL

IN CAB SLAVE WATER GAUGE

FRC TANKVISION WATER MINI

FRC TANKVISION MINI REMOTE WATER LEVEL GAUGE, INSTALLED TO HAVS CONSOLE

AUXILLARY WATER LEVEL GAUGE

FRC MAXIVISION - BODY SIDES (DUAL)

FRC MAXVISION, LARGE REMOTE WATER LEVEL GAUGE, INSTALLED TO SIDES OF BODY UPPER FORWARD DOOR FRAME (EA SIDE) L1 / R1, TIED TO VEHICLE IN PARK SIGNAL VIA SCANPORT

FOAM LEVEL GAUGE

TANK SIGHT TUBE

TANK SIGHT WINDOW ONLY - NO ADDED FOAM LEVEL GAUGE

DISCHARGE DISTRIBUTION TO TOPSIDE

SINGLE SLEEVE TO TOPSIDE OUTLETS

DISCHARGE PLUMBING SLEEVED THROUGH TANK TO FRONT CORNER OUTLET FOR CONNECTION TO TOPSIDE OUTLETS (X1)

HOSE REEL REWIND(S)

TOPSIDE DUAL: BEDRAIL/ INLINE

DUAL PUSH BUTTON MOMENTARY REWIND SWITCHES MOUNTED TO BEDRAIL ON EACH SIDE OF APPARATUS, INLINE WITH HOSE REELS. ETCHED BEZELS "REWIND" INSTALLED TO BOTH SWITCHES.

HOSE REEL DISCHARGE PLUMBING

TOPSIDE DUAL - FORWARD

STAINLESS STEEL HOSE REEL DISCHARGE PLUMBING FOR DUAL TOPSIDE HOSE REELS IN "REELS FORWARD" CONFIGURATION. FROM TOPSIDE OUTLET, 1" AKRON VALVE IN REEL INLET AREA W/ ETCHED VALVE LABEL "BOOSTER REEL" ON EACH HOSE REEL.

DRIVER DECK DISCHARGE ASSY

1.5" DISCHARGE - LH REAR BEDRAIL OF PLATFORM

STANDARD 1.5" DISCHARGE ON DRIVER SIDE REAR DECK CORNER. STAINLESS STEEL PLUMBING FROM PUMP INITIAL OUTLET ASSY. 1.5" AKRON VALVE W/ ETCHED VALVE LABEL "1.5" DISCHARGE"

OFFICER SIDE DISCHARGE DISTRIBUTION ASSY

STANDARD CORNER DISTRIBUTION

STANDARD OS CORNER DISTRIBUTION PLUMBING

DISCHARGE SUB ASSY - TANK FILL

STANDARD TANK FILL

STANDARD TANK FILL PLUMBING ASSEMBLY EXTENDING FROM OFFICER SIDE DISCHARGE DISTRIBUTION, THRU TOP OF PLUMBING STEP ALONG TANK WALL AND INTO TANK. 1.5" AKRON VALVE W/ MANUAL CONTROL. ETCHED / BENT BEZEL "TANK FILL"

MASTER DRAIN

MASTER DRAIN (STD)

STANDARD MASTER DRAIN VALVE: INSTALLED TO BOTTOM CORNER OF REAR APRON
DRAIN ALL PLUMBING, PUMP, AND LOW POINTS

SPECIALTY / CUSTOM DISCHARGE(S)

CUSTOM OPT-00273

CUSTOM: SPOKANE SPEC SINGLE 2.5" DC ON OS DECK CORNER IN PLACE OF STD OR STACKED OPTIONS. SEE PRINTS AND FULL BOM WORK UP

REAR CAB ORGANIZER
NONE
NO REAR CAB ORGANIZER TO BE INSTALLED.

TOPSIDE ACCESSORIES
NONE
NO ADDED TOPSIDE ACCESSORIES OR DIVIDERS INCLUDED

WINCH ACCESSORIES
FACTOR 55 ULTRAHOOK
INCLUDE FACTOR 55 ULTRAHOOK AND INSTALL IN PLACE OF FACTORY WARN WINCH HOOK

BOOSTER HOSE
1" LIGHTWEIGHT BOOSTER (NH FIELD REPLACEABLE)
1" LIGHTWEIGHT BOOSTER HOSE COUPLED TO FIT HOSE REEL LENGTH - NH / RED RUBBER

BOOSTER NOZZLE(S)
DUAL / NH: C&S 110/23
C&S 110/23 DUAL GALLONAGE BOOSTER NOZZLE, 1" FNH (QTY 2) INCLUDED

REAR HOSE HOOK
SWEV ALUM HOSE HOOK ASSY
REMOVEABLE HOSE HOOK KIT, DUAL REC MOUNTS AND SINGLE ALUM 1"SQ TUBE HOOK

DRIP TORCH MOUNTS
SINGLE STATIC MNT
SINGLE DRIP TORCH MOUNT PROVIDED AND INSTALLED (PER DEPT SPECS)

DRIP TORCHES
SINGLE DRIP TORCH
1..25 GALLON C&S DRIP TORCH INCLUDED

FLASHLIGHTS - MOUNT & WIRE
NONE
NO HANDHELD FLASHLIGHTS INCLUDED OR INSTALLED

PAC MOUNT - BOOSTER NOZZLE(S)
DUAL / PAC 1004
PAC TOOL HANDLELOK INSTALLED TO EACH REEL BASE

PORTABLE RADIO CHARGERS - MOUNT & WIRE
DEPT SUPPLIED CHARGER(S) MOUNT & WIRE
DEPARTMENT PROVIDED PORTABLE RADIO CHARGER(S) INSTALLED IN CAB AND WIRED TO CONSOLE 12V CONSTANT POWER

SPANNER / HYD WRENCH SET (MOUNTED)
NONE
NO SPANNER AND HYDRANT WRENCH SET INCLUDED

TOW HOOK / SHACKLE (ADDED)
NONE
NO ADDED 2" REC MOUNT SHACKLE INCLUDED

WHEEL CHOCKS AND MOUNTS

AC-32W W HORIZONTAIL MOUNT - PAIR
ZICO AC-32W WILDLAND COMPLIANT WHEEL CHOCK PAIR AND DUAL MOUNTS INCLUDED (SHIP LOOSE)

BULLETPOINT MOUNT OPTIONS

NONE
NO AMPS 20MM BALL MOUNTS

BULLETPOINT ACCESSORIES

NONE
NO BULLETPOINT ACCESSORIES INCLUDED

CAB DOME LIGHTING

WHELEN R/W COMBO (2) FRONT/REAR
QTY 2 WHELEN SPLIT RED / WHITE SURFACE MOUNT LED INTERIOR LIGHTS TO BE INSTALLED, ADDED TO HEADLINER. 1 EA TO BE CENETERED OVER FRONT AND BACK ROW.

ON BOARD AIR

NONE
NO ON BOARD AIR COMPRESSOR SYSTEM INSTALLED

SPITZ LIFT HOIST

SPITZ LIFT CRANE 4' MANUAL
SPITZ LIFT 4' FOLDING BOOM MANUAL CRANE, 20' MIL SPEC WEBBING W/ 1.25 TON HOOK LATCH, STRUCTURE MOUNT & ACCOMODATION TO BODY TOPSIDE, HOIST POST MAST ADAPTER 26"
USED FOR RAISING / LOWERING SPARE TIRE FROM TOP OF APPARATUS

CUSTOM: ADDED LOOSE EQUIP

NONE
NO CUSTOM ADDED LOOSE EQUIPMENT

HARD SUCTION

2.5" X BODY LENGTH - NH (2)
2 SECTIONS OF 2.5" HARD SUCTION COUPLED TO BODY LENGTH AND INCLUDED, NH, PREINSTALLED TO APRON HOSE BOX, INCLUDES 2.5 BARREL STRAINER

REAR GRAB HANDLES

STANDARD (2@18")
2 STANDARD GRAB HANDLES PROVIDED AND INSTALLED TO BACK OF APPARATUS IN TOPSIDE ACCESS WALKWAY / STEP AREA AS NEEDED

HITCH STEP

SWEV FOLDING HITCH STEP SHACKLE
FABRICATED HITCH INSERT DROP STEP AND REC MOUNT SHACKLE COMBO
FLIP STEP ON DROP, 2.5" HITCH MOUNT, ACCEPTS / ADAPTS TO 2" & PRE INSTALLED W/ INCLUDED 2" HITCH SHACKLE, DOUBLE PINS, W/ INTEGRATED LIGHT WIRED TO GROUND LIGHTS ON PLUG

INTERNAL ENGINEERING

SWEV DESIGN ENGINEERING
INTERNAL DESIGN TIME AND ENGINEERING, CONCEPT DRAWINGS AND APPROVAL PRINTS, JOB SPECIFIC LAYOUT ENGINEERING PER CONFIGURATION

PURCHASE MECHANISM

SOURCEWELL
OURCEWELL CONTRACT #020124-SEW UTILIZED
DEPT MUST PROVIDE SOURCEWELL MEMBER #

SALES REP

STEVE WICKWIRE

SOLD BY STEVE WICKWIRE

FINAL INSPECTION

FINAL INSPECTION: ON SITE @ SWEV

FINAL INSPECTION, IN SERVICE TRAINING, AND CUSTOMER ACCEPTANCE AT PRODUCTION FACILITY: YAKIMA, WA, CUSTOMER INSPECTION COSTS NOT INCLUDED IN PURCHASE

DELIVERY

DELIVERY: AGENCY DRIVEAWAY

CUSTOMER TO DRIVEAWAY UNIT AFTER FINAL INSPECTION AND ACCEPTANCE

REP NOTES / REVIEW ITEMS

STRIPING / GRAPHICS - CUSTOM GRAPHICS

SEE PRINTS / PRELIM

SPECIALTY / CUSTOM DISCHARGE(S) - CUSTOM OPT-00273

OS FINAL DC: AKR 2.5-INCH SINGLE - PENDING FINAL DESIGN APPROVAL

PURCHASE AGREEMENT FOR CUSTOM BUILT EMERGENCY VEHICLE

This Agreement is hereby entered into by and between Cascade Fire Equipment Corp., DBA: Ridgehound Emergency Vehicles, located 123 South Front Street, Yakima, WA 98901 (hereinafter "Company") and the City of Spokane Fire Department, located 44 W. Riverside Ave, Spokane, WA 99201 (hereinafter "Buyer"), (together hereinafter the "Parties"). HERETOFORE, in consideration for the mutual promises enumerated herein, and other good and valuable consideration, the Parties agree as follows:

1. **APPARATUS.** The Company agrees to sell, and the Buyer agrees to purchase three custom built emergency vehicles "Ridgehound Model 1", "NWCG Type V Wildland" type fire apparatus(s) and associated equipment (collectively hereinafter referred to as "Apparatus") described in the Company's quoted proposal per the Buyer's Specifications, which are attached hereto and hereby incorporated herein, all in accordance with the terms and conditions of this Agreement.

2. **PURCHASE MECHANISM.** This purchase will be made utilizing Sourcewell contract #020124-SEW.

3. **PURCHASE PRICE.** Buyer agrees to pay a Purchase Price of *One Million Four Thousand Three Hundred Thirty Six Dollars and 19/100 Cents, (1,004,336.19)* for both units completed in accordance with the Buyer's Specifications. The total above *does not* include State Sales Tax. State sales tax (YAKIMA-MVT) shall be added to this transaction. If the Buyer claims an exemption from any tax assessed in this transaction, Buyer agrees to furnish the applicable exemption certificate to the Company and to hold Company harmless from any damage which may result from the Company ultimately having any such tax assessed against it.

   (a) The terms of this purchase agreement and above purchase price are valid until December 31st, 2026. If this agreement remains unexecuted at such date, the quoted purchase price and terms of this agreement shall be confirmed or adjusted as needed prior to execution.

4. **COMPONENTS.** To offset supply change challenges with certain components needed to complete the Apparatus, all moderate to long lead time items will be ordered immediately.

5. **SUPPLY CHAIN AND MARKET CONDITIONS:**

   (a) Due to current market constraints and supply chain challenges, the buyer may see upcharges or cost increases due to material and component price increases. The Company will order components and materials as early as possible to try and avoid such increases.

   (b) The buyer will be notified, and all efforts will be made to avoid such increases, but should the need arise for any price increases the buyer will be shown documentation for specific items requiring any price adjustment.

   (c) If such upcharges or cost increases exceed 10% of the total purchase price, Buyer may elect to terminate this Purchase Agreement without penalty.

   (d) While every effort will be made by the Company to produce a completed product in as short of a timeframe as possible, delays and product shortages are out of the company's control. Any shortages or delays that will affect lead time will be communicated with the Buyer in as clear and transparent way as possible.

(e) Due to instability in OEM pricing, it is possible that the OEM Chassis builder may levy surcharges, fees or price increases in the future that would increase the price quoted above.

(f) Any increases in Chassis cost will be documented to the Buyer and invoiced appropriately and paid promptly by the Buyer. All increases shall be borne solely and wholly by the Buyer.

(g) This timeline for Chassis and production costs is a good faith estimate by the Company utilizing that information currently available to the Company. Any delays in Chassis or component delivery shall not be the responsibility of the Company not shall the Company be liable for any damages the Buyer may suffer due to such delays to the extent said delays are beyond the reasonable control of the Company, whether said damages be direct or consequential.

(h) In the event of delay or price changes for material occurring during the performance of the contract, the contract sum, time of performance and contract requirements shall be equitably adjusted by change order provided by the Company to the Buyer to reflect said changes. Any changes in contract sums or timing of performance due to issues shall not be deemed a material breach of this contract and the Buyer shall continue to be bound by its obligations to purchase in accordance with the adjustments to the pricing and timing of performance. Buyer shall be responsible for payment of all price increases levied by third parties to the Company as part of production of the vehicle.

6. **PAYMENT TERMS.** Buyer shall furnish one (1) payment upon arrival of the chassis at the Company facility and three (3) installment payments during the performance of this Agreement, based upon completion of the applicable production modules as follows:
   - **(a)** Total balance of Build Modules 1-3 upon completion (including but not limited to: chassis components and alterations, striping / graphics, body, compartmentation, shelves, and steps).
   - **(b)** Total balance of Build Modules 4-6 upon completion (including but not limited to: electrical systems, switching, battery charger, emergency warning, lighting, siren control systems, installed accessories, center console, winch, and air systems).
   - **(c)** Total balance of Build Modules 7-8 (including but not limited to: plumbing, tank, pump, foam system, suppression systems, nozzles, loose equipment, hose, chocks, delivery, and shipping) approximately two (2) weeks before final completion of the Apparatus.
   - **(d)** Final Payment shall also include any change orders, material increases, credits against balance, or any other cost increases and changes. Final Payment shall be paid in full upon the Buyer's final inspection and acceptance of the Apparatus.

7. **WARRANTIES:**

   (a) **New Item(s) of Apparatus:** The Company warrants each new item of Apparatus manufactured by it against defects in material and workmanship occurring within a period of one (1) year from the date of delivery to the original user/purchaser. Furthermore, the Company warrants its stainless steel welded and fabricated plumbing systems against defects in material and workmanship for a period of ten (10) years from the date of delivery to the original user/purchaser. The warranty provided herein is more particularly described in the Company's preprinted Statement of Warranty which is attached to this Agreement. In the event of any conflict between the Statement of Warranty and this Agreement, the Statement of Warranty shall govern. By Buyer's signature below, Buyer hereby acknowledges receipt of the Company's preprinted Statement of Warranty.

(b) **Item(s) of Apparatus not Manufactured by Company:** With respect to any items of Apparatus which are not manufactured by the Company, such items are not warranted by the Company and Company hereby disclaims all warranties with respect to such item(s), express or implied, including warranties of merchantability and fitness for a particular purpose that may be attributed to Company under this Agreement or by law. However, such item(s) shall be subject to any warranty provided by the manufacturer of such item(s).

8. PRODUCTION UNIT PROJECT COMPLETION TIMELINE:

(a) The Company operates on a scheduled production basis in coordination with subcontractors and supplier partners. Subject to timely execution of this Agreement, units are allocated to simultaneous production start date of February 22, 2027, with anticipated completion during the last week of April 2027. Upon execution, the Company will coordinate component procurement, subcontractors, and production resources necessary to support the scheduled build. Buyer will be notified upon formal production start and kept informed of major production milestones and any material changes to the anticipated completion schedule.

(b) This timeline for Chassis and production is a good faith estimate by the Company utilizing that information currently available to the Company. Any delays in Chassis or component delivery shall not be the responsibility of the Company not shall the Company be liable for any damages the Buyer may suffer due to such delays to the extent said delays are beyond the reasonable control of the Company, whether said damages be direct or consequential.

(c) The Company shall not be charged with liquidated damages, general damages, or any excess cost if any delay of the delivery of goods is due to:

- Any preference, priority or allocation order duly issued by any governmental agency.
- Unforeseeable causes beyond the reasonable control of the Company and without the fault, or negligence of the Company, including but not restricted to, acts of God, or of the public enemy, acts of the Buyer, acts of another Contractor in the performance of a contract with the Buyer, fire, flood, epidemics, quarantine restrictions, strikes, freight embargoes, and natural disasters.
- Any delays of subcontractors occasioned by any of the causes specified in the two immediately preceding clauses.

9. NOTICE. The parties to this Agreement designate the individuals executing this Agreement as the respective representative of the parties to this Agreement, for purposes of receiving communications regarding this Agreement.

10. ENTIRE AGREEMENT. This Agreement, including its attachments and exhibits, constitutes the entire understanding between the parties relating to the subject matter contained herein and merges all prior discussions and agreements. No agent or representative of the Company has authority to make any representations, statements, warranties, or agreements not herein expressed and all modifications or amendments of this agreement, including its attachments and exhibits, must be in writing signed by an authorized representative of each of the Parties hereto.

11. BINDING EFFECT. This Agreement shall be binding upon and shall inure to the benefit of the respective heirs, legal representatives, successors, and assigns of the Parties hereto.

12. **GOVERNING LAW.** This Agreement shall be governed by, and the rights and duties of the parties shall be construed and determined in accordance with, the laws of the State of Washington. In the event of litigation or arbitration, the parties hereby stipulate that the Superior Court of Yakima County, State of Washington, is the proper venue for such dispute to be resolved.

13. **HEADINGS.** The headings in this Agreement are intended solely for convenience of reference and shall be given no effect in the construction or interpretation of this Agreement.

14. **AUTHORIZATION.** The individual executing this Agreement on behalf of Buyer and elected Board of Commissioners does hereby affirmatively represent that he/she has full and express authority to execute said Agreement on Buyer's behalf and to bind the Buyer to the same.

15. **MISCELLANEOUS.** There are no third-party beneficiaries to this Agreement. This Agreement may not be assigned to a third party, unless consented to in writing by the non-assignor. Should any provision of this Agreement be deemed unenforceable by a court of competent jurisdiction, the remainder of this Agreement shall remain in full force and effect.

16. **HOLD HARMLESS/INDEMNIFICATION.** Each Party shall indemnify, defend, and hold the other Party, its affiliates, subsidiaries, directors, officers, employees, and contractors, harmless from and against any claim, action, damages, liability, loss, cost or expense (including reasonable attorney's fees and costs), arising out of the performance of this Agreement. Neither Party shall be deemed to be an agent of the other party, for purposes of this License.

17. **NFPA 1906 UPFIT.** The Buyer reserves the right to purchase NFPA 1906 compliant equipment from Company and have that equipment mounted and installed by the Company as is in the best interest of the Fire District to upfit and best utilize the Apparatus.

IN WITNESS WHEREOF, the Company and the Buyer have caused this Agreement to be executed by their duly authorized representatives as of the date set forth by each.

COMPANY:	Ridgehound Emergency Vehicles	**BUYER:**	City of Spokane Fire Department
SIGN:		**SIGN:**	
PRINT:	Jordan Koffler	**PRINT:**	
TITLE:		**TITLE:**	
DATE:		**DATE:**	

RIDGEHOUND EMERGENCY VEHICLES
WARRANTY & CUSTOMER SUPPORT PROGRAM

OUR COMMITMENT

At Ridgehound Emergency Vehicles, we recognize that emergency apparatus are mission-critical assets. Our warranty program is designed not only to provide comprehensive coverage, but also to minimize downtime and simplify the repair process for our customers.

Ridgehound serves as your primary warranty advocate and support partner. Whether a concern involves a Ridgehound-manufactured component or an OEM-supplied component, our goal is to coordinate repairs efficiently and keep your apparatus in service.

WARRANTY CONTACT

Dave Boyd
Warranty Administrator & Technical Support Coordinator

Dave Boyd serves as Ridgehound's primary warranty contact and technical support resource.

Responsibilities include:

- Technical troubleshooting and diagnosis assistance
- Warranty claim coordination
- Repair authorization
- OEM warranty coordination
- Replacement part support
- Return material authorization and processing
- Repair facility coordination

Customers should contact Ridgehound prior to performing warranty repairs whenever practical.

WARRANTY SERVICE PROCESS

Step 1 – Contact Ridgehound

If a warranty concern arises, contact RHEV.

Our team will:

- Gather information regarding the concern
- Assist with troubleshooting
- Determine warranty eligibility
- Recommend the most appropriate repair path
- Coordinate replacement parts if required

Step 2 – Determine the Appropriate Repair Solution

Ridgehound utilizes multiple service options to provide the most efficient and cost-effective warranty support.

Option A – Local Repair Facility

For customers located outside Ridgehound's primary service region, Ridgehound encourages the use of qualified local repair facilities that the department already knows and trusts.

When approved by Ridgehound:

- Repairs may be performed by the customer's preferred repair facility.
- Repair estimates may be requested prior to work beginning.
- Approved repair facilities may invoice Ridgehound directly for covered warranty repairs.
- Ridgehound will coordinate parts and warranty authorization as required.

This approach minimizes apparatus downtime and avoids unnecessary transportation expenses.

Option B – Department In-House Repairs
For agencies with qualified fleet maintenance personnel and repair capabilities, Ridgehound may authorize in-house repairs.
Under this process:

- Ridgehound supplies approved replacement parts at no charge.
- Technical support is provided as needed.
- Labor reimbursement may be issued as an account credit when applicable and approved.
- Documentation of repairs and labor hours may be required.

This option allows departments to leverage their internal maintenance resources while still receiving full warranty support.

Option C – Ridgehound Service Facility Repair
For major structural, fabrication, plumbing, paint, electrical integration, or other significant repairs, Ridgehound may determine that the apparatus should return to a Ridgehound service facility.
In these situations, Ridgehound will:

- Coordinate repair scheduling
- Assist with transportation planning
- Perform repairs utilizing factory-trained technicians
- Coordinate any required OEM support

WARRANTY PARTS SUPPORT
Ridgehound maintains an active warranty parts support program designed to minimize apparatus downtime.
When warranty replacement parts are required:

- Parts will be supplied by Ridgehound at no charge for approved warranty repairs.
- Expedited shipping may be utilized when necessary.
- Technical installation assistance is available.
- Failed components may be required to be returned for warranty evaluation.

Returned components may be submitted to the original manufacturer or supplier for warranty analysis.
Failure to return requested components may affect warranty claim eligibility.

1-YEAR COMPREHENSIVE WARRANTY
Ridgehound Emergency Vehicles warrants each new fire and rescue apparatus manufactured by Ridgehound Emergency Vehicles against defects in material and workmanship when operated and maintained under normal and reasonable conditions.
This warranty extends only to the original purchaser and remains in effect for one (1) year from the date of delivery.
Ridgehound's obligation under this warranty is limited to the repair or replacement, at Ridgehound's option, of components determined to be defective in material or workmanship.
Covered components may include, but are not limited to:

- Apparatus body construction
- Plumbing installation
- Electrical integration and installation
- Fabrication workmanship
- Mounting systems
- Ridgehound-manufactured components
- Other components specifically identified within the apparatus build

Ridgehound reserves the right to determine the appropriate repair method and repair location.

10-YEAR STAINLESS STEEL PLUMBING WARRANTY

Ridgehound Emergency Vehicles warrants stainless steel plumbing components manufactured by Ridgehound and installed within the apparatus water and foam plumbing systems against defects in material and workmanship.
This warranty extends only to the original purchaser and remains in effect for ten (10) years from the date of delivery.
Coverage applies to Ridgehound-manufactured stainless steel plumbing components when operated and maintained under normal and reasonable service conditions.

OEM COMPONENT WARRANTIES

Many major apparatus components carry manufacturer warranties that extend beyond Ridgehound's standard one-year comprehensive warranty.
Examples may include:

Component	Typical Coverage*
HPI Body	Lifetime
UPF Poly Tank	Lifetime Service Warranty
Akron Brass Swing-Out Valves	10 Years
Darley Pumps	3 Years
Whelen Products	Varies by product
Havis Equipment	Varies by product
Commercial Chassis	Per chassis manufacturer
Engines	Per manufacturer
Transmissions	Per manufacturer

*Warranty terms are governed by the original component manufacturer and may vary by product and production date.
Ridgehound serves as the customer's warranty advocate and will assist with:

- Warranty claim coordination
- Technical support
- Warranty documentation
- Replacement parts procurement
- Communication with component manufacturers

Manufacturer warranty claims remain subject to each manufacturer's specific terms and conditions.

WARRANTY EXCLUSIONS

This warranty does not apply to:

- Normal maintenance services
- Routine adjustments
- Consumable items
- Filters
- Lubricants
- Belts
- Light bulbs
- Wiper blades
- Brake pads and brake linings
- Tires
- Batteries
- Damage caused by accident
- Damage caused by misuse or abuse
- Improper maintenance

- Unauthorized modifications
- Operation beyond manufacturer recommendations
- Corrosion resulting from environmental exposure
- Cosmetic wear not affecting function
- Loss of use
- Downtime expenses
- Rental apparatus costs
- Incidental or consequential damages

LIMITATION OF LIABILITY

Ridgehound Emergency Vehicles shall not be liable for incidental, consequential, special, indirect, or economic damages, including but not limited to loss of use, downtime, rental costs, loss of revenue, or inconvenience arising from the use or inability to use the apparatus.

This warranty is expressly in lieu of all other warranties, express or implied, including any implied warranty of merchantability or fitness for a particular purpose, to the extent permitted by law.

No employee, dealer, representative, or agent is authorized to modify this warranty except in writing by Ridgehound Emergency Vehicles.

Ridgehound reserves the right to make product improvements and design changes without obligation to retrofit previously manufactured apparatus.

RIDGEHOUND EMERGENCY VEHICLES MASTER WARRANTY TERMS AND CONDITIONS

Effective Date: JULY 1 2026

These Master Warranty Terms and Conditions govern all warranties provided by Ridgehound Emergency Vehicles ("Ridgehound"), including but not limited to the Ridgehound One-Year Comprehensive Warranty, Ten-Year Stainless Steel Plumbing Warranty, extended warranty programs, and any additional warranty coverage expressly provided in writing by Ridgehound.

1. WARRANTY COVERAGE

Ridgehound warrants that apparatus, equipment, components, and systems manufactured by Ridgehound shall be free from defects in material and workmanship under normal use, operation, and maintenance during the applicable warranty period.
Ridgehound's sole obligation under this warranty shall be, at Ridgehound's option, to repair, replace, or provide credit for any component determined by Ridgehound to be defective in material or workmanship.
Warranty coverage applies only to the original purchaser unless otherwise authorized in writing by Ridgehound.

2. WARRANTY PERIODS

Applicable warranty periods shall be as stated in:

- Sales contracts
- Apparatus specifications
- Warranty certificates
- Product documentation
- Ridgehound published warranty programs

Specific warranty periods may vary by product, component, or contractual agreement.
Where multiple warranties apply, the longest applicable warranty period shall apply only to the specific component covered by that warranty.

3. WARRANTY CLAIM PROCEDURE

Warranty concerns should be reported to Ridgehound promptly upon discovery.
Ridgehound reserves the right to:

- Inspect the apparatus or component
- Review maintenance records
- Request photographs or diagnostic information
- Require troubleshooting procedures
- Require return of failed components
- Approve repair methods and repair facilities

Failure to provide requested information may result in delay or denial of warranty consideration.

4. AUTHORIZED REPAIRS

Warranty repairs may be performed by:

- Ridgehound service facilities
- Authorized service providers
- Approved third-party repair facilities
- Customer maintenance personnel when authorized by Ridgehound

Ridgehound reserves the right to determine the most appropriate repair method and repair location.
Unauthorized repairs may affect warranty coverage.

5. REPLACEMENT PARTS
Ridgehound may provide replacement parts for approved warranty claims.
Replacement parts may consist of:

- New parts
- Remanufactured parts
- Equivalent replacement components

Ridgehound reserves the right to determine the appropriate replacement solution.
Any component replaced under warranty becomes the property of Ridgehound upon request.

6. RETURN OF FAILED COMPONENTS
Ridgehound reserves the right to require return of any failed component for inspection, analysis, or warranty recovery from original manufacturers.
Returned components must:

- Be returned in substantially the same condition as removed
- Not be disassembled unless authorized
- Be shipped according to Ridgehound instructions

Failure to return requested components may result in denial of warranty coverage or billing for replacement parts.

7. OEM COMPONENT WARRANTIES
Certain apparatus systems and components are manufactured by third parties and carry warranties provided by their respective manufacturers.
Examples may include:

- Chassis
- Engines
- Transmissions
- Pumps
- Water tanks
- Foam systems
- Valves
- Lighting equipment
- Electronic controls
- Generators

Ridgehound may assist customers with warranty administration; however, warranty determination for such products remains subject to the policies and procedures of the original manufacturer.
Ridgehound assumes no obligation beyond the warranty provided by the original manufacturer.

8. CUSTOMER RESPONSIBILITIES
The customer shall:

- Operate the apparatus according to manufacturer recommendations
- Perform routine maintenance
- Maintain service and maintenance records
- Promptly report suspected defects
- Prevent further damage where reasonably possible
- Allow reasonable access for inspection and repair

Failure to meet these responsibilities may affect warranty eligibility.

9. EXCLUSIONS
This warranty does not cover:

Normal Maintenance
- Lubrication
- Routine adjustments
- Scheduled maintenance
- Preventive maintenance

Consumable and Wear Items
- Filters
- Fluids
- Lubricants
- Belts
- Bulbs
- Fuses
- Wiper blades
- Brake linings
- Brake pads
- Tires
- Batteries

Damage Resulting From
- Accident
- Abuse
- Misuse
- Negligence
- Improper operation
- Improper maintenance
- Corrosion
- Environmental exposure
- Chemical exposure
- Freezing
- Acts of God
- Unauthorized modifications
- Improper repairs
- Installation of non-approved components

Other Exclusions
- Cosmetic defects not affecting functionality
- Transportation expenses unless specifically authorized
- Rental equipment costs
- Loss of service
- Loss of use
- Downtime expenses
- Administrative costs
- Overtime labor
- Travel expenses unless specifically approved
- Consequential damages

10. APPARATUS MODIFICATIONS
Any modification, alteration, welding, fabrication, structural repair, or installation of non-approved components that, in Ridgehound's judgment, adversely affects apparatus performance, safety, reliability, or structural integrity may void applicable warranty coverage.

11. LIMITATION OF REMEDIES
Repair, replacement, or credit as determined by Ridgehound shall constitute the sole and exclusive remedy under this warranty.
Ridgehound shall not be obligated to replace an entire assembly when repair of the defective component is practical and reasonable.
Ridgehound reserves the right to determine whether repair or replacement is the appropriate remedy.

12. DISCLAIMER OF OTHER WARRANTIES
TO THE MAXIMUM EXTENT PERMITTED BY LAW, THIS WARRANTY IS EXCLUSIVE AND IS PROVIDED IN LIEU OF ALL OTHER WARRANTIES, WHETHER EXPRESS, IMPLIED, STATUTORY, OR OTHERWISE.
RIDGEHOUND SPECIFICALLY DISCLAIMS ALL IMPLIED WARRANTIES OF MERCHANTABILITY, FITNESS FOR A PARTICULAR PURPOSE, TITLE, AND NON-INFRINGEMENT.
NO PERSON, DEALER, REPRESENTATIVE, EMPLOYEE, OR AGENT IS AUTHORIZED TO MODIFY THIS WARRANTY EXCEPT THROUGH A WRITTEN AGREEMENT EXECUTED BY AN AUTHORIZED OFFICER OF RIDGEHOUND.

13. LIMITATION OF LIABILITY

TO THE MAXIMUM EXTENT PERMITTED BY LAW, RIDGEHOUND SHALL NOT BE LIABLE FOR ANY:

- INCIDENTAL DAMAGES
- INDIRECT DAMAGES
- SPECIAL DAMAGES
- PUNITIVE DAMAGES
- CONSEQUENTIAL DAMAGES
- LOSS OF REVENUE
- LOSS OF PROFITS
- LOSS OF SERVICE
- LOSS OF USE
- LOSS OF BUSINESS OPPORTUNITY
- SUBSTITUTE APPARATUS COSTS
- RENTAL COSTS
- TOWING COSTS
- TRAVEL EXPENSES
- LODGING EXPENSES
- MEAL EXPENSES
- ADMINISTRATIVE EXPENSES

WHETHER ARISING IN CONTRACT, TORT, NEGLIGENCE, STRICT LIABILITY, OR OTHERWISE.
IN NO EVENT SHALL RIDGEHOUND'S LIABILITY EXCEED THE ORIGINAL PURCHASE PRICE OF THE SPECIFIC COMPONENT OR SYSTEM GIVING RISE TO THE CLAIM.

14. PRODUCT IMPROVEMENTS

Ridgehound reserves the right to improve, modify, redesign, or discontinue products without obligation to modify previously manufactured apparatus.

15. GOVERNING LAW

These Warranty Terms and Conditions shall be governed by and construed in accordance with the laws of the State of Washington, without regard to conflict of law principles.
Any legal action arising from these warranty terms shall be brought in a court of competent jurisdiction located within the State of Washington.

16. ENTIRE AGREEMENT

These Master Warranty Terms and Conditions constitute the complete warranty agreement between Ridgehound and the purchaser and supersede all prior verbal or written representations regarding warranty coverage.
If any provision of these terms is determined to be unenforceable, the remaining provisions shall remain in full force and effect.

RIDGEHOUND EMERGENCY VEHICLES

(877) 637-3473

Quote

Quote #	QT2117961
Date	10/14/2026
Expires	12/31/2026
Sales Rep	Koffler, Jordan
Shipping Method	Customer Pick Up
Customer	SPOKANE FIRE DEPARTMENT (WA)
Customer #	C38439

Bill To
SPOKANE FIRE DEPARTMENT
ACCOUNTS PAYABLE
44 W RIVERSIDE AVE
SPOKANE WA 99201-0114
United States

Ship To
SPOKANE FIRE DEPARTMENT
ACCOUNTS PAYABLE
44 W RIVERSIDE AVE
SPOKANE WA 99201-0114
United States

Item	Alt. Item #	Units	Description	QTY	Unit Price	Amount
CORWINFORD			CUSTOM CORWIN FORD TRI CITIES 2027 FORD F550 SUPERDUTY CREW CAB. 4X4, 179" WB, 60" CA, DRW, 19,500 GVW, 6.7L POWERSTROKE DIESEL, RACE RED, FIRE PREP PKG.	3	$85,500.00	$256,500.00
CUSTOM BUILD MODULE 1			CUSTOM BUILD MODULE 1 MODULE 1: CHASSIS COMPONENT AND ALTERATION	3	$34,812.57	$104,437.71
CUSTOM BUILD MODULE 2			CUSTOM BUILD MODULE 2 MODULE 2: STRIPING & GRAPHICS	3	$4,925.00	$14,775.00
CUSTOM BUILD MODULE 3			CUSTOM BUILD MODULE 3 MODULE 3: BODY AND BODY COMPONENT	3	$60,655.08	$181,965.24
CUSTOM BUILD MODULE 4			CUSTOM BUILD MODULE 4 MODULE 4: LIGHTING AND ELECTRICAL SYSTEMS	3	$23,154.84	$69,464.52
CUSTOM BUILD MODULE 5			CUSTOM BUILD MODULE 5 MODULE 5: EMERGENCY WARNING AND CONTROL SYSTEMS	3	$23,495.98	$70,487.94
CUSTOM BUILD MODULE 6			CUSTOM BUILD MODULE 6 MODULE 6: INSTALLED ACCESSORIES	3	$13,134.69	$39,404.07
CUSTOM BUILD MODULE 7			CUSTOM BUILD MODULE 7 MODULE 7: PLUMBING AND SUPPRESSION SYSTEMS	3	$74,755.19	$224,265.57
CUSTOM BUILD MODULE 8			CUSTOM BUILD MODULE 8 MODULE 8: LOOSE EQUIPMENT & MISC	3	$14,345.38	$43,036.14

Subtotal	$1,004,336.19
Shipping Cost	$0.00
Tax Total	$91,394.59
Total	$1,095,730.78

Contact: C38439 SPOKANE FIRE DEPARTMENT (WA) : KYLE CHASE (509) 435-7080

This Quotation is subject to any applicable sales tax and shipping and handling charges that may apply. Tax and shipping charges are considered estimated and will be recalculated at the time of invoice to ensure they take into account the most current information.

All returns must be processed within 30 days of receipt and require a return authorization number and are subject to a restocking fee.

Custom orders are not returnable. Effective tax rate will be applicable at the time of invoice.

QT2117961

CUSTOMER CITY OF SPOKANE FIRE DEPARTMENT
GSO#: 27107 - 27108
DESIGN MODEL 1 REV 1
DATE 10/14/2026

RIDGEHOUND EMERGENCY VEHICLES

MECHANISM: SOURCEWELL
SALES ORDER #: TBD
SALES PERSON: Steve Wickwire
PROJECT MGR: Jordan Koffler

MOD	CATEGORY	SELECTION	DESC	ITEM #	QTY	LINE TOTAL	EXTERNAL NOTES
9	**CHASSIS**	FORD F550 : INCLUDED SWEV STD	2027 FORD F550 SUPERDUTY CREW CAB. 4X4, 179" WB, 60" CA, DRW, 19,500 GVW, 6.7L POWERSTROKE DIESEL, RACE RED, FIRE PREP PKG.	CORWINFORD-CORWINFORD	1	$ 85,500.00	
1	**CHASSIS FINISH**	FACTORY	FACTORY CAB PAINT FINISH	DISCLAIMER	0	$ -	NO COST / REF ONLY
1	**DRIVETRAIN / SUSPENSION**	BUCKSTOP SRW CONV : STAGE III CONVENTIONAL / FORD	BUCKSTOP STAGE 3 SRW FORD F550 CONVERSION KIT 335/80R20 TIRES (5), & 11"X20" REVERSIBLE DOT ALUM WHEELS (5), HIGH ARCH FENDER FLARES, OUTBACK BUMPER (WIDE), 3.5" SUSP. LIFT, SPEEDO, ABS, TRACTION CONTROL CALIBRATION MODULE / CORRECTION, RADFLO REMOTE RESERVOIR TUNED 2.5" SHAFT SHOCKS	F235S3-BUCKSTOP	1	$ 26,258.57	
			KIT INBOUND FREIGHT	LCS-SHIPPING CHARGES	1	$ 1,100.00	
			INSTALL - BUCKSTOP SRW CONV, REPLACEMENT HARDWARE KIT A/N TO COMPLETE / SHOP SUPPLIES A/N MOUNT & BALANCE, ALIGNMENT, PROGRAMMING TO VEHICLE AS NEEDED	INSTALL	1	$ 5,550.00	
1	**TIRES**	BUCKSTOP SRW: PETLAS	PETLAS335-BUCKSTOP SRW CONVERSION TIRES: PETLAS RM910 335/80R20 (5) - 41.1" CAPACITY - HIGH SPEED: 81MPH, 6614LBS AT 87PSI CAPACITY - LOW SPEED: 68MPH, 7165LBS AT 94PSI TREADLIFE: HIGH MILEAGE*	BUCKSTOP-BUCKSTOP	5	$ -	NO COST / REF ONLY
1	**WHEELS**	BUCKSTOP SRW CONV ALUM WHEELS	7KPRO-BUCKSTOP WHEEL, 8K PRO HD - 20x11, MPT BEAD, 10 on 225MM / DOT COMPLIANT POWDERCOATED BLACK W MACHINED ACCENTS	BUCKSTOP-BUCKSTOP	5	$ -	NO COST / REF ONLY
1	**BUMPER**	BUCKSTOP SRW: FORD F550 KIT BUMPER	BUCKSTOP CONV KIT FRONT BUMPER - CONFIGURED AS FOLLOWS F175WOB BUMPER, W/ OUTBACK GRILL GAURD (PC HAMMER BLACK), DITCH LIGHT CUTOUTS, WINCH MOUNTING PLATE ASSY (BUILT EXTRA WIDE FOR TIRE COVERAGE, FLUSH FIT W/ FLARES) (N/C REF ONLY $ INC W/ SRW CONVERION)	F235SOB06-BUCKSTOP	1	$ 700.00	INSTALL LABOR ONLY (INC W SRW CONVERSION KIT)
1	**CAB STEPS**	FACTORY	CHASSIS FACTORY SIDE STEPS TO BE UTILIZED N/C REF ONLY	DISCLAIMER	0	$ -	NO COST / REF ONLY
1	**REAR CAB ORGANIZER**	NONE	NO REAR CAB ORGANIZER	DISCLAIMER	0	$ -	NO COST / REF ONLY
1	**CAB DOME LIGHTING**	WHELEN R/W COMBO (2) FRONT/REAR	MOUNTED TO HEADLINER, 1 EA FRONT / BACK ROW, WHELEN 12 DIODE LLED INTERIOR LIGHT, SPLIT RED/WHITE, 6" RND (SURFACE MOUNT)	60CREGCS-WHELEN	2	$ 1,204.00	
2	**STRIPING / GRAPHICS**	CUSTOM GRAPHICS	STRIPING PER DEPT SPECS AS FOLLOWS: SEE PRINTS FRONT CAB DOOR GRAPHICS: REAR CAB DOOR GRAPHICS: BODY STRIPE: CAB ROOF ID: REAR CHEVRON: REAR GRAPHICS: BODY SIDE GRAPHICS / ADDED LETTERING: ACCENT GRAPHIC(S):	MONSTER GRAPHICS-MG	1	$ 4,925.00	CUSTOM DETAIL ENTRY + SPECIAL PRICING REQUIRED TO COMPLETE SELECTION
			MATERIAL TO COMPLETE GRAPHICS INSTALL	DISCLAIMER	1	$ -	NO COST / REF ONLY
3	**BACK UP CAM**	INSTALL FACTORY CAM TO BODY / WIRE TO DISPLAY	FACTORY CAMERA - SUPPIED W/ CHASSIS, MOUNT TO BODY & ROUTE HARNESS TO HEAD UNIT / PROGRAM (CHASSIS SUPPLIED W/ CAMERA & UPFITTER KIT)	DISCLAIMER	0	$ 175.00	INSTALL LABOR ONLY
3	**BODY FINISH**	POWDERCOATING - STANDARD	BODY POWDERCOATED JOB COLOR INCLUDING: FLATBED DECK, APRON, RAILS, COMPARTMENTS INSIDE & OUTSIDE, HEX PUNCH GRD, ETC ACCESSORIES POWDERCOATED BLACK BK62 INCLUDING: SHELVES, STEPS, FENDER FLARES, TOPSIDE COFFIN BOXES, TOPSIDE BASKETS, DOOR HANDLES, CROSSFRAME ROCK GUARD	POWDERCOAT-HPI	1	$ -	REF ONLY COST $ INCLUDED IN ALL HPI COMPONENTS
3	**HPI MODEL 1 BODY BASE**	HPI MODEL 1 BODY BASE	HPI BASE ASSY FLATBED DECK, NOTCHED, SQ CORNER, REVERSED C CHANNEL SMOOTH FRAME - INCLUDING FULL BODY ASSY KIT CONTENTS PER BELOW:	9055-01-356-HPI	1	$ 18,875.00	
			6" SILL KIT	9055-07-113-HPI	1	$ -	INC W 9055-01-356-HPI
			STRT CORNER TAILBOARD	9055-03-086-HPI	1	$ -	INC W 9055-01-356-HPI
			FULL WIDTH APRON STEP	9055-10-015-HPI	1	$ 858.33	
			LIFT DOOR TOPSIDE COMPARTMENT - L2 56"WX31.5"HX18"D, VERTICAL LIFT SINGLE DOOR W/ GAS SHOCK (2), ADJ SHELF, D RING HANDLE (BLACK), COMPARTMENT VENT & BACKSIDE LOUVER ASSY	9020-556-HPI	1	$ 3,165.65	
			LIFT DOOR TOPSIDE COMPARTMENT - R2 56"WX31.5"HX18"D, VERTICAL LIFT SINGLE DOOR W/ GAS SHOCK (2), ADJ SHELF, D RING HANDLE (BLACK), COMPARTMENT VENT & BACKSIDE LOUVER ASSY	9020-556-HPI	1	$ 3,165.65	
			FENDER SKIRT	9055-13-047-HPI	1	$ 191.67	

			FENDER FLARES	9055-13-048-HPI	1	$ 885.63	
			FRONT OVERLAY	9055-99-129-HPI	1	$ 885.63	
			SRW MUDFLAPS	550-18-002-HPI	1	$ 281.25	
			DEF COVER	9055-99-073-HPI	1	$ -	INC W 9055-01-356-HPI
			DIESEL FILL KIT	550-09-001-HPI	1	$ -	INC W 9055-01-356-HPI
			HOSE BOX	9055-12-028-HPI	1	$ 1,500.00	
			CAMERA MOUNT KIT	9055-15-027-HPI	1	$ 393.75	
			SQ CRNR LIGHT KIT	550-00074-HPI	1	$ -	INC W 9055-01-356-HPI
			WIRING INSTALL KIT	550-22-012-HPI	1	$ -	INC W 9055-01-356-HPI
			FREIGHT TO SWEV FOR INSTALLATION	LCS-SHIPPING CHARGES	1	$ 1,850.00	
			INSTALLATION OF HPI BODY ASSY TO CHASSIS - INTEGRATE AND WIRE LIGHTING, INSTALL FUEL / DEF NECKS & BEZELS	SHOP SUPPLIES	1	$ 2,550.00	
3	**L1/R1 TRANSVERSE**	OPTION 1: 400G / 18"	TRANSVERSE CROSS FRAME L1 / R1 COMPARTMENT "HORSESHOE/NOTCHED" CENTER @ 18 THRU", SWING DOOR (HINGED CAB SIDE) W/ GAS SHOCK, FIXED SHELF AT THRU SECTION MIDPOINT, D RING HANDLES (BLACK) 51.5" (31.5" TOPSIDE) H X 26"(18" THRU SECTION)W X 18"/SIDE (+60" THRU SECTION) DEEP	9009-373-HPI	1	$ 8,570.12	
3	**L3 POSITION**	L3 HEX PUNCH - STANDARD	DS FENCE: HEX PUNCH GRD INSTALLED L3 POSITION PC JOB COLOR	9027-321-HPI	1	$ 677.70	
3	**R3 POSITION**	R3 COMPARTMENT - STANDARD	CTECH SINGLE DRAWER INSTALLED TO BASE OF R3 COMPARTMENT FULL EXTENSION	315-CFG-35025-HPI	1	$ 1,339.53	
			LIFT DOOR TOPSIDE COMPARTMENT R3 32"W X 31.5"H X 18" D, VERTICAL LIFT SINGLE DOOR W/ GAS SHOCK (2), ADJ SHELF, D RING HANDLE	9020-555-HPI	1	$ 3,783.28	
3	**L1/R1 TRANSVERSE ACCESSORIES**	NONE	NO L1 OR R1 TRANSVERSE ACCESSORIES ADDED	DISCLAIMER	0	$ -	
3	**L2 OR R2 COMPARTMENT ACCESSORIES**	NONE	NO L2 OR R2 COMPARTMENT ACCESSORIES ADDED	DISCLAIMER	0	$ -	
3	**AFT OF AXLE UNDERBODY**	GUSSET ASSEMBLY (STANDARD)	GUSSET ASSEMBLY ENCLOSURE AFT OF AXLE (KIT)	9055-99-080-HPI	1	$ -	INC W 9055-01-356-HPI
3	**TOPSIDE OVERLAY**	MODEL 1 STANDARD TANK GRIP OVERLAY (400G / 500G)	3/16 ALUM DMND TREAD PLATE TOPSIDE WALKWAY COVERING TOP OF TANK AND L1/R1 CROSSFRAME - NOTCHED FOR FILL TOWERS, POWDERCOATED GRIP TEXTURE BLACK - MOUNTED TO TANK MOUNT INSERTS, EXTENDING TO FRONT OF CROSSFRAME COMPARTMENT, D RINGS FOR SRW STORAGE INTEGRATED (400 OR 500 GAL TANK)	MOD1-TOPSIDEWALK-STD-RSMECH	1	$ 805.47	
3	**TOPSIDE - FRONT CROSSFRAME DUNNAGE**	COFFIN BOX - STANDARD	TOPSIDE COFFIN BOX, T LATCH HANDLE ON TS OF LID, 48.75" X 12" X 18", W/ GAS SHOCK ASSIST, HINGED TO FRONT PC BK62	9007-730-HPI	1	$ 2,360.23	
3	**TOPSIDE - LH DUNNAGE**	LH: 40.5" BASKET (REEL FWD, NO L3)	TOPSIDE BASKET HEX PUNCH 40.5" X 18" X 12" PC BK62 (SMOOTH OUTER FACE TO OUTSIDE)	9027-320-HPI	1	$ 946.88	
3	**TOPSIDE - RH DUNNAGE**	RH: 60.5" BASKET (REEL FWD, W/ R3)	TOPSIDE BASKET HEX PUNCH 60.5" X 18" X 12" PC BK62 (SMOOTH OUTER FACE TO OUTSIDE REAR HEXES REMOVED FOR HANDLE AND LIGHT MOUNTING	9027-358-HPI	1	$ 1,441.15	
			11.25x8.125x6.25 ANGLED BOLT ON HANDLE ASSY	9059-99-091-BK62-HPI	1	$ 235.00	
3	**TOPSIDE ACCESSORIES**	NONE	NO ADDED TOPSIDE DUNNAGE STORAGE ACCESSORIES / DIVIDERS / BRACKETRY	DISCLAIMER	0	$ -	
3	**TOPSIDE ACCESS**	MODEL 1 MODULAR STEP W PRECONNECT VERT ENCLOSURE / RISER	OS CORNER DECK MODULAR STEP ASSY W/ DROP DOOR, SOUTHCO C2 LATCHES, ACCEPTS MODULAR STEP TREAD AND FACE INSERTS.	MOD1-STEP-RSMECH	1	$ 2,550.00	
			STEP TREAD AND PRECONNECT PLUMBING ENCLOSURE W CUBBY	MOD1-STEP-VERTDCSHROUD-01-RSMECH	1	$ 1,591.20	
			POWDERCOAT: STEP ASSY JOB COLOR OR BK62 [SPEC] AND TREAD SURFACE SUPERGRIP BLACK	CENTRALVALLEYCOATING-CVCB	1	$ 180.00	
3	**BODY SIDE STEPS**	BODY - SIDE ZICO (EA SIDE)	MANUAL PULL OUT STEP	PS-8-5-ZICO	2	$ 1,107.88	
			UNDERBODY STEP STIFFENER	Mod 1 Underbody Step Stiffener-RSMECH	2	$ 289.08	
4	**COMPARTMENT LIGHTING**	MODEL 1 STANDARD / FRC SUNSTRIP	LED200-A27 SUNSTRIP 27"	11167003-WILLBURT	6	$ 1,806.80	
			LED200-A45 SUNSTRIP 45"	11167005-WILLBURT	4	$ 1,176.62	
4	**MASTER BATTERY**	RED ETCHED ROCKER	CONTURA V ROCKER ON-OFF 1INDB LED 4 TERM SPST BLUE ON-OFF	V1D1-GXXB-ROCKERSWITCHPRO	1	$ 389.00	
			SWITCH GUARD SHROUD STAINLESS	SWGRD-RSMECH	1	$ 18.00	

			RED ETCHED SW COV	SW COVER-MASTER POWER-ROCKERSWITCHPRO	1	$ 24.00	
4	**CORE ELECTRICAL DISTRIBUTION**	STANDARD	F550 BATTERY CLAMP REPLACEMENT, ELECTRONICS MOUNTING TRAY	F550ETRAY-RSMECH	1	$ 139.50	
			INLINE FUSE HOLDER, 12AWG ATO/ATC	102-2230-ROMAINELEC	3	$ 101.42	
			12 GANG FUSE BLOCK W/COVER	BLUESEA 5026ST-ROMAINEELEC	2	$ 620.18	
			6 GANG FUSE BLOCK W/ COVER	104-2067-ROMAINEELEC	2	$ 527.50	
			POLLOCK 225A SPST SOLENOID, CONTINUAL DUTY	POL114-1211-020-0-ROMAINEELEC	2	$ 628.28	
			2/0 CABLE, RED [PER FT] 04716-ROMAINEELEC	SHOP SUPPLIES-ROMAINE	15	$ 347.50	
			BUSSMAN 300 AMP MANUAL RESET BREAKER	RES185-300-ROMAINELEC	1	$ 260.14	
			EATON/BUSSMAN 3/8 JUNCTION STUD 250 A BLACK	JB3816-2-ROMAINEELEC	5	$ 336.00	
			EATON /BUSSMAN 3/8 JUNCTION STUD 250A RED	JB3816-3-ROMAINEELEC	5	$ 336.00	
			4 AWG CABLE, RED [PER FT] 04700-ROMAINEELEC	SHOP SUPPLIES-ROMAINE	10	$ 217.50	
			6 AWG CABLE, RED [PER FT] 04728-ROMAINEELEC	SHOP SUPPLIES-ROMAINE	10	$ 205.50	
			REC SHOP SUPPLIES AS NEEDED TO COMPLETE HEAT SHRINK CONNECTORS, RINGS TERMINALS, MALE & FEMALE INSULATED SPADE CONNECTORS 2/3/4/6/8/12 DEUTSCH RECEPTACLE, WEDGE, SOCKET, PINS	SHOP SUPPLIES-ROMAINE	1	$ 950.00	
			SOLID AND STRIPED 14AWG	SHOP SUPPLIES-ROMAINE	250	$ 297.50	
			REAR SEAT AREA CORE E BRACKET / C399 POWER DIST : 3/16 ALUM	CORE E BKT-RSMECH	1	$ 292.50	
			Vgate 12-Way AGM Post Terminal Ends, Battery Terminal Connector Clamps, 8AWG up to 4/0(XL) AWG Gauge, Positive & Negative for SAE/DIN/EN Tapered Top Post	AGM TERM ENDS-AMAZON	1	$ 137.00	
4	**DOOR AJAR SYSTEM**	CAB & BODY DOORS, AUDIBLE + VISUAL	RED LIGHT W/ BUZZER 12V	DRAJR12V-AMAZON	1	$ 360.00	
			1 AMP DIODE (6) & OTHER SPCLTY ELECTRICAL A/N	SHOP SUPPLIES	1	$ 575.00	
4	**BATT CHARGER**	KUSSMAUL CHIEF 4012	KUSSMAUL CHIEF SERIES SMART CHARGER - 4012 (40A) W BUILT IN DISPLAY	091-266-12-40-KUSSMAUL	1	$ 1,573.75	
			BUSSMAN 80 AMP MANUAL RESET BREAKER	RES185-80-ROMAINEELEC	1	$ 280.00	
			[PER FT] 12 AWG WIRE - RED 02742-ROMAINEELEC	SHOP SUPPLIES-ROMAINE	15	$ 95.75	
			[PER FT] 12 AWG WIRE - BLACK 02744-ROMAINEELEC	SHOP SUPPLIES-ROMAINE	15	$ 95.75	
			REC SHOP SUPPLIES AS NEEDED TO COMPLETE HEAT SHRINK CONNECTORS, RINGS TERMINALS, MALE & FEMALE INSULATED SPADE CONNECTORS 2/3/4/6/8/12 DEUTSCH RECEPTACLE, WEDGE, SOCKET, PINS	SHOP SUPPLIES-ROMAINE	1	$ 127.50	
4	**AUTO EJECT**	CUSTOM - SPOKANE	NOCO 329-GCP1EX AC PORT SHORELINE INLET, 12' LEAD BLACK (MOUNT TO REAR BEDRAIL IN PLACE OF TRADITIONAL AUTO EJECT	PCARD-PCARD	1	$ 417.42	EDITED 9/25
4	**AUTO EJECT**	CUSTOM - SPOKANE	ELECTRICAL SUPPLIES A/N TO INSTALL	SHOP SUPPLIES-ROMAINE	1	$ 300.00	EDITED 9/25
4	**120V OUTLET(S) BODY - SHORELINE**	SINGLE: L2 OR R2 COMPARTMENT [SPEC]	2G WP DEEP BOX W/5-3/4 HUBS	CHE TP7130-CED	2	$ 239.24	
			20A 125V GCFI RCPT	PS 2097TRWRW-CED	1	$ 305.50	
			20A 125V RCPT	PS WR20TRW-CED	1	$ 187.57	
			2 GANG RCPT ENCL	TAY MM2420C-CED	1	$ 36.52	
			3/4 STR L/T PVC CONN	ARL NMLT75-CED	2	$ 7.00	
			3/4 90D L/T CONN	ARL NMLT9075-CED	2	$ 23.00	
			12AWG PSH-IN WR CONN	SHOP SUPPLIES	7	$ 89.60	
			3/4 NMLT FLEX CONDUIT	SHOP SUPPLIES	10	$ 225.50	

			12/2 ROMEX	SHOP SUPPLIES	15	$ 388.40	
4	**INVERTER POWER 2KW**	NONE	NO FORD PROPOWER INVERTER SYSTEM ADDED/INCLUDED	DISCLAIMER	0	$ -	NO COST / REF ONLY
4	**SCENE LIGHT SWITCHING**	CAB & PUMP PANEL	BODY SIDE, REAR WORK, TOPSIDE WORK ALL SWITCHED ON/OFF FROM CAB OR PUMP PANEL. PANEL: ETCHED ROCKER SW COVERS FOR FUNCTION, CARLING CONTURA V ROCKER SWITCHED, WIRING, CONNECTORS, RELAYS AND DIODES A/N TO COMPLETE	SHOP SUPPLIES	1	$ 107.50	
			[PER FT] 14 AWG WIRE - (COLOR) REPLACE XXX W/ 3 DIGIT COLOR CODE (O2XXX-ROMAINEELEC)	SHOP SUPPLIES-ROMAINE	75	$ 211.75	
			REC SHOP SUPPLIES AS NEEDED TO COMPLETE HEAT SHRINK CONNECTORS, RINGS TERMINALS, MALE & FEMALE INSULATED SPADE CONNECTORS 2/3/4/6/8/12 DEUTSCH RECEPTACLE, WEDGE, SOCKET, PINS	SHOP SUPPLIES-ROMAINE	1	$ 293.75	
			CARLING 10 PIN SW WIRE KIT PLUG	VC2-0-ROMAINEELEC	4	$ 139.50	
			DRIVER SCENE SW ETCHED COVER	SW COVER-DRIVERS SCENE-ROCKERSWITCHPRO	1	$ 24.00	
			OFFICER SCENE SW ETCHED COVER	SW COVER-OFFICERS SCENE-ROCKERSWITCHPRO	1	$ 24.00	
			REAR WORK LIGHTS SW ETCHED COVER	SW COVER-REAR WORK-ROCKERSWITCHPRO	1	$ 24.00	
			TOPSIDE WORK SW ETCHED COVER	SW COVER-TOPSIDE WORK-ROCKERSWITCHPRO	1	$ 24.00	
			CONTURA V ROCKER SWITCH (ON)OFF(ON) DPDT	VLD2-UXXB-ROCKERSWITCHPRO	4	$ 395.00	
4	**TOPSIDE WORK LIGHTING**	STANDARD: 5 X 9" SUNSTRIP W/SHROUD	LED200-A09 SUNSTRIP 9"	11167001-WILLBURT	5	$ 810.00	
			SUNSTRIP LIGHT SHROUD PROTECTOR	SW-BKT004-9SS-PATRIOTCOMP	3	$ 150.50	
4	**ROCK LIGHTS**	NONE	NO ROCK LIGHTS	DISCLAIMER	0	$ -	NO COST / REF ONLY
4	**GROUND LIGHTING**	APRON & TRACER	TRACER WHITE FUNCTION PROGRAMMED AS CAB DOOR LIGHTING	DISCLAIMER	0	$ -	EDITED 9/25 - N/C REF ONLY
			12V STANDALONE LIGHTBAR WHITE LED 12"	R04786-12-ROM	2	$ 286.90	EDITED 9/25
4	**FRONT FOG LIGHTING**	BAJA DESIGNS AMBER	BAJA DESIGNS LP6 PRO LED 6" RND LIGHT POD DRIVING/COMBO, AMBER LENS, AMBER BACKLIGHT	270013-BAJA	2	$ 1,560.00	
4	**FRONT BUMPER SCENE LIGHTING**	DUAL PODS	WHELEN NP6BB NANO PIONEER LED POD LIGHT	NP6BB-WHELEN	2	$ 625.00	ADDED 9/25
			POD LIGHT ANGLE BRACKET - BLACK	SW-BKT001-NP6BB-PATRIOTCOMP	2	$ 36.00	ADDED 9/25
4	**DRIVER SCENE LIGHTING**	LIGHTBAR - BAJA	20" BAJA DESIGNS S8 STRAIGHT LED LIGHT BAR: DS SCENE, CLEAR, MOUNTED TO DS TOPSIDE STORAGE - SWITCHED FROM CAB OR PUMP PANEL	702006-BAJADESIGN	1	$ 955.25	
4	**OFFICER SCENE LIGHTING**	LIGHTBAR - BAJA	20" BAJA DESIGNS S8 STRAIGHT LED LIGHT BAR: OS SCENE, CLEAR, MOUNTED TO OS TOPSIDE STORAGE - SWITCHED FROM CAB OR PUMP PANEL	702006-BAJADESIGN	1	$ 955.25	
4	**BODY FRONT SCENE LIGHTING**	WHELEN NP6BB BODY FRONT UPPER CORNERS (EA SIDE)	WHELEN NP6BB NANO PIONEER LED POD LIGHT	NP6BB-WHELEN	2	$ 800.00	
			POD LIGHT ANGLE BRACKET - BLACK	SW-BKT001-NP6BB-PATRIOTCOMP	2	$ 36.00	
4	**REAR WORK LIGHTING**	WHELEN NP6BB UPPER REAR (DUAL)	WHELEN NP6BB NANO PIONEER LED POD LIGHT	NP6BB-WHELEN	2	$ 712.50	
			POD LIGHT ANGLE BRACKET - BLACK	SW-BKT001-NP6BB-PATRIOTCOMP	2	$ 36.00	
4	**REAR WORK LIGHTING**	WHELEN WORKSIDE - ADDED	WORKSIDE LED SCENE, BLACK FLANGE INCLUDED MOUNTED TO BOTTOM OF BASKETS BOTH SIDES REAR FACING - TIED TO REAR/TOPSIDE WORK LIGHTS	WSLB-WHELEN	2	$ 960.00	ADDED 9/25
5	**SYSTEM / CONTROLLER**	CENCOM CORE WCX C399 & CCTL7 21& SLIDE CONTROLLER, 3X CEM16 EXPANSION MODULES	WHELEN CORE WCX - C399 CENCOM CORE SYSTEM - MOUNTED DS UNDER/ BEHIND SEAT	C399-WHELEN	1	$ 2,325.00	
			CCTL7 WECANX SYSTEM CONTROLLER, 21 PUSH BUTTON AND 4 POS SLIDE SWITCH, PA MIC & CABLE *REMOTE PA MIC JACK MOUNT TO SIDE OF CONSOLE*	CCTL7-WHELEN	1	$ 600.00	
			WHELEN 16 OUTPUT, 4 INPUT WECANX EXPANSION MODULE (3) 1 UNDER HOOD FOR FRONT ELECTRONICS, 2 IN PUMP PANEL FOR REAR ELECTRONICS	CEM16-WHELEN	3	$ 2,805.00	
5	**SYNC MODULE**	NONE	NO SYNC MODULE	DISCLAIMER	0	$ -	NO COST / REF ONLY
5	**LIGHTBAR**	WHELEN LIBERTY II WCX (FORD CHASSIS)	WHELEN LIBERTY II WECAN X 54" CTR DDDD LIGHTBAR, MOUNTED FRONT CAB DUO R/W FRONT, R/A REAR, R/W CORNER MODULES, LEFT & RIGHT ALLEY LIGHTS, TAKEDOWNS	BJ2DDDD-WHELEN	1	$ 3,587.50	
			MKAJ94 MOUNTING STRAP KIT FOR FORD SUPERDUTY	MKAJ94-WHELEN	1	$ 137.50	
5	**OPTICOM**	NONE	NO OPTICOM OR TRAFFIC SIGNAL CONTROLLER	DISCLAIMER	0	$ -	NO COST / REF ONLY
5	**SIREN SPEAKER**	F550 GRILL MNT, SA315P	WHELEN SA315P 123 DB SIREN SPEAKER	SA315P-WHELEN	1	$ 609.00	

			SUPER DUTY HIDDEN VEHICLE SPECIFIC SIREN SPEAKER MOUNT	SAK61AD-WHELEN	1	$ 234.00	
5	**HOWLER SYSTEM**	NONE	NO HOWLER SIREN SPEAKER SYSTEM ADDED	DISCLAIMER	0	$ -	NO COST / REF ONLY
5	**LIGHT BEZEL FINISH**	BLACK	ALL WARNING LIGHT SHROUDS TO BE BLACK	DISCLAIMER	0	$ -	NO COST / REF ONLY (INCLUDED AS OUTLINED IN COMPONENT LINES)
5	**FRONT LOWER WARNINGS**	M6 R/W DUO, CLR LENS	WHELEN M6 M6DD (CLR) RED/WHITE, FRONT LOWER WARNING LIGHT - MOUNTED TO LOWER OUTSIDE ASPECTS OF BUMPER, FORWARD FACING	M6DD-WHELEN	2	$ 960.00	
			FABRICATED ALUM MOUNTING FLANGE W/ BUMPER FOR WHELEN M6 WARNING, BK62	M6 SHROUD-RSMECH	2	$ 161.82	
5	**FRONT LOWER WARNING BEZELS**	M6 BLACK	WHELEN M6 BEZEL, BLACK M6FB	M6FB-WHELEN	2	$ 32.00	
5	**FRONT GRILL WARNINGS**	T SERIES R/W DUO, CLR LENS	WHELEN T-SERIES DUO (CLR) RED/WHITE, FRONT GRILL WARNING LIGHT - MOUNTED TO BRUSH GUARD UPRIGHTS / GRILL AREA	TSS0D-WHELEN	2	$ 575.72	
5	**INTERSECTION WARNINGS**	M2 RED, CLR LENS	WHELEN M2 SERIES LIGHTHEAD ML2RC (CLR) RED, INTERSECTION WARNING LIGHT, MOUNTED TO FRONT FENDER EA SIDE	ML2RC-WHELEN	2	$ 895.00	EDITED 9/25
5	**INTERSECTION WARNING BEZELS**	M2 BLACK	WHELEN M2 BEZEL, BLACK M2FB	M2FB-WHELEN	2	$ 32.00	EDITED 9/25
5	**MIDSHIP WARNINGS**	M2 RED, CLR LENS	WHELEN M2 SERIES LIGHTHEAD ML2RC (CLR) RED, MIDSHIP WARNING LIGHT, MOUNTED TO BEDRAIL FRONT AND REAR OUTSIDE CORNERS	ML2RC-WHELEN	4	$ 1,265.00	EDITED 9/25
5	**MIDSHIP WARNING BEZELS**	M2 BLACK	WHELEN M2 BEZEL, BLACK M2FB	M2FB-WHELEN	4	$ 64.00	EDITED 9/25
5	**BODY SIDE UPPER WARNING**	T SERIES RED, CLR LENS (SPOKANE - CUSTOM)	WHELEN T-SERIES TLIR (CLR) RED, UPPER BODY WARNING LIGHT - MOUNTED TO TOP UPPER FORWARD CORNER / OUTER FACE OF TOPSIDE BASKET BOTH SIDES	TLIR-WHELEN	2	$ 706.94	ADDED 9/25
5	**BODY SIDE UPPER WARNING BEZELS**	T SERIES / NONE	NO BEZEL NEEDED / T-SERIES	DISCLAIMER	0	$ -	ADDED 9/25 - N/C REF ONLY
5	**DRIVER REAR LOWER WARNING**	DS: M2 RED/BLUE	WHELEN M2 SERIES LIGHTHEAD ML2DJ (CLR) RED/BLUE DUO, DS REAR LOWER WARNING MOUNTED TO BEDRAIL NEAR DOT LIGHT	ML2DJ-WHELEN	1	$ 415.00	EDITED 9/25
5	**OFFICER REAR LOWER WARNING**	OS: M2 RED/BLUE	WHELEN M2 SERIES LIGHTHEAD ML2DJ (CLR) RED/BLUE DUO, OS REAR LOWER WARNING MOUNTED TO BEDRAIL NEAR DOT LIGHT	ML2DJ-WHELEN	1	$ 415.00	EDITED 9/25
5	**REAR LOWER WARNING LIGHT BEZELS**	M2 BLACK	WHELEN M2 BEZEL, BLACK M2FB	M2FB-WHELEN	2	$ 32.00	EDITED 9/25
5	**DRIVER REAR UPPER WARNING:**	DS: M4 RED/BLUE (CUSTOM - SPOKANE)	WHELEN M4 M4DJ (CLR) RED/BLUE, REAR UPPER WARNING LIGHT - MOUNTED TO COFFIN TOPSIDE BASKET OUTER CORNER REAR FACING	M4DJ-WHELEN	1	$ 390.00	EDITED 9/25
5	**OFFICER REAR UPPER WARNING:**	OS: M4 RED/BLUE (CUSTOM - SPOKANE)	WHELEN M4 M4DJ (CLR) RED/BLUE, REAR UPPER WARNING LIGHT - MOUNTED TO COFFIN TOPSIDE BASKET OUTER CORNER REAR FACING	M4DJ-WHELEN	1	$ 390.00	EDITED 9/25
5	**REAR UPPER WARNING LIGHT BEZELS**	M4 BLACK	WHELEN M4 BEZEL, BLACK M4FB	M4FB-WHELEN	2	$ 32.00	EDITED 9/25
5	**REAR TRAFFIC ADVISOR**	NONE	NO ADDED REAR TRAFFIC ADVISOR	DISCLAIMER	0	$ -	NO COST / REF ONLY
5	**TRACERS - CAB**	TRACERS	5 LAMP HOUSING TRACER	TCRWX5-WHELEN	2	$ 3,172.50	ADDED 9/25
			UNIVERSAL TRACER L BRACKET *(INST)	TCRLBKT-WHELEN	12	$ 442.50	ADDED 9/25
			WCX TRACER PRIMARY MODULES	TCRWXPD-WHELEN	2	$ 104.00	ADDED 9/25
			WCX TRACER SECONDARY MODULES	TCRWXSD-WHELEN	8	$ 416.00	ADDED 9/25
5	**PROGRAMMING**	STD HARNESSES	J5/J6 OUTPUT HARNESS FOR CEM 16	COREHEXP16-KDBC	3	$ 813.00	
			J7 DATA COMM HARNESS FOR CEM 16	COREHGND-KDBCO	3	$ 735.00	
			GROUND HARNESS	COREHCAN-KDBCO	3	$ 428.00	
			WHELEN SCANPORT OBDII INTEGRATION MODULE	C399SP-WHELEN	1	$ 275.00	
			SOLID / STRIPED HARNESS MATCH WIRING, LOOM, CONNECTORS, DEUTSCH PLUGS, CONSUMEABLE SHOP SUPPLIES AS NEEDED TO COMPLETE LIGHTING INSTALLATION	SHOP SUPPLIES-ROMAINE	1	$ 295.00	
6	**CENTER CONSOLE**	30" FORD 13.3" CONSOLE ASSY SINGLE RAD NO PUMP CONT	30" FORD 13.3" VSW HAVIS CONSOLE FLAT (30"-9, 24.5"-3.3)	C-VSW-3000-F150-3-HAVIS	1	$ 2,443.89	
			1" FILLER PLATE	C-FP-1-HAVIS	5	$ 65.00	
			3.5" RADIO ACCESSORY PLATE (TBD BY RADIO MODEL)	KENTDBRUCE-KENTDBRUCE	1	$ 37.00	NEED MODEL # OF RADIO(S)
			WHELEN CCTL7 CONTROLLER ACCESSORY PLATE	C-EB40-CCS-1P-HAVIS	1	$ 37.00	
			CONSOLE ACCESSORY BRACKET KIT WITH 2 LIGHTER PLUG OUTLETS W/ 1 USB-C & USB TYPE A DUAL PORT CHARGER & 2 BLANKS FOR RECTANGULAR ACCESSORIES	C-LP2-USB-BL2-HAVIS	1	$ 156.00	
			3" ACCESSORY POCKET, 2.5" DEEP	C-AP-0325-1-HAVIS	1	$ 51.00	
			INTERNAL CUPHOLDER, DUAL, ADJUSTING	CUP2-1001-HAVIS	1	$ 67.00	
			2" FILLER PLATE	C-FP-2-HAVIS	1	$ 13.00	

			6" ACCESSORY POCKET W/ LID & LOCK, 4.5" DEEP	C-AP-0645-L-HAVIS	1	$ 180.00	
			.5" FILLERPLATE	C-FP-05-HAVIS	1	$ 13.00	
			SIDE MOUNT ARMREST	C-ARM-102-HAVIS	2	$ 188.00	
			VSW 3.3 : 5" FILLER PLATE	C-FPW-5-HAVIS	1	$ 9.00	
			EQUIPMENT BRACKET FOR WIDE VSW CONSOLES, FITS DUAL USB OR SWITCH PANEL	C-EBW20-USB2-1P-HAVIS	1	$ 20.00	
			VSW 3.3 : 1.5" FILLER PLATE	C-FPW-15-HAVIS	1	$ 8.00	
			VSW DOCUMENT POCKET : 13" X 9" D	C-APW-1390-HAVIS	1	$ 84.00	
			VSW 3.3 : 3" FILLER PLATE	C-FPW-3-HAVIS	1	$ 8.00	
6	**RADIO INSTALLATION**	SINGLE INSTALL, DEPT SUPPLIED RADIO KIT	INSTALL DEPT SUPPLIED RADIO UTILIZING DEPT SUPPLIED ANTENNA BASE + COAX KIT - SINGLE RADIO INSTALL TO HAVIS (DOES NOT INCLUDE PROGRAMMING) DEPT TO SPECIFY ANTENNA PLACEMENT AND PROVIDE RADIO MODEL #	SHOP SUPPLIES	1	$ 525.00	INSTALL LABOR ONLY
6	**BULLETPOINT MOUNT OPTIONS**	NONE	NO BULLETPOINT DEVICE MOUNTS	DISCLAIMER	0	$ -	NO COST / REF ONLY
6	**BULLETPOINT ACCESSORIES**	NONE	NO BULLETPOINT DEVICE ACCESSORIES	DISCLAIMER	0	$ -	NO COST / REF ONLY
6	**ARGES SYSTEM / REMOTE LIGHT**	NONE	NO ARGES REMOTE DIRECTIONAL SPOTLIGHT INSTALLED	DISCLAIMER	0	$ -	NO COST / REF ONLY
6	**ON BOARD AIR**	NONE	NO ON BOARD AIR SYSTEM ADDED / INSTALLED	DISCLAIMER	0	$ -	NO COST / REF ONLY
6	**TOPSIDE TIRE MOUNT**	TRIPLE LOOPS & Y STRAP TO CATWALK	Y STRAP / RATCHETING TO FASTEN TIRE DOWN TO TOPSIDE FROM D RINGS	SJC-RYS-AMAZON	1	$ 229.50	
6	**SPITZ LIFT HOIST**	SPITZ LIFT CRANE 4' MANUAL	SPITZ LIFT 4' FOLDING BOOM MANUAL CRANE, 20' MIL SPEC WEBBING W/ 1.25 TON HOOK LATCH (FOR HOISTING SPARE TIRE ON OR OFF TOPSIDE OF BODY)	LTM-424-A-SPITZLIFT	1	$ 2,027.25	
			STRUCTURE MOUNT / ACCOMODATION: BRACKET PAIR, SPITZ LIFT CRANE MOUNT REC. STEEL	CRANE MT RCVR-RSMECH	1	$ 964.29	
			POST MAST ADAPTER 26"	KPHBS-026-SPITZLIFT	1	$ 697.52	
			SHIPPING INBOUND	LCS-SHIPPING CHARGES	1	$ 150.00	
6	**WINCH**	WARN 16.5 TI, W/ SYNTHETIC CABLE (16,500 LB)	WARN 97740 16.5 TI, 16,500 WINCH W/ SYNTHETIC CABLE	WW 97740-WIT	1	$ 4,713.48	
6	**WINCH ACCESSORIES**	FACTOR 55 ULTRAHOOK	FACTOR 55 ULTRAHOOK (RED) INSTALLED IN PLACE OF FACTORY WARN WINCH HOOK	00250-01-FACTOR55	1	$ 447.76	
7	**REAR DECK CONFIGURATION**	STANDARD	STANDARD REAR DECK SELECTION	DISCLAIMER	0	$ -	NO COST / REF ONLY
7	**POLY TANK**	UPF 400 GAL - MOD 1 STD	UPF RECTANGULAR POLY TANK PER DWG 450 GAL, STD SUMP / DRAIN / SUCTION / VENT 10 GAL INTEGRAL FOAM CELL FOAM CELL X2 NPT FEMALE 2" OVERFLOW VENT BOTT TAB MOUNTING BACK, NUT INSERTS FRONT BOTT TOPSIDE MOUNTING TAPS FOR WALKWAY FOAM AND WATER FILL TOWERS ON DS EDGE, INLINE, WATER FILL ON TANK MIDLINE FORWARD OF FOAM CELL PORT NPT F PLACEMENT TBD PER STD / SEE PRINTS UPPER RIGHT CORNER SLEEVED & NOTCHED FOR TOPSIDE PLUMBING THRU ROUTING X 2 59"W X 64"+2"L X 31.5" H	UNITED PLASTIC	1	$ 9,185.00	
7	**PUMP**	STANDARD CONFIG: DARLEY 1-1/2AGE24K 3.17 RATIO EGOV	DARLEY 1-1/2AGE 24K PUMP (3.17 RATIO) EGOV 2026 HIGH PRESSURE, LOW VOLUME, GEAR DRIVEN, ENGINE MOUNTED KUBOTA D902 DIESEL 24HP, LIQUID COOLED 120 GPM @ 150 PSI NO-DIS-HEAD, DC: ASSY - FLANGE, 2.0 NPT 3/8-16N (4) ON 2.5 SQ ALUMINUM ALLOY CASING ALUMINUM ALLOY GEAR CASE AND ENGINE ADAPTER BRONZE IMPELLER AND WEAR RINGS STAINLESS STEEL IMPELLER SHAFT MECHANICAL SEAL HEAT-TREATED ALLOY STEEL HELICAL GEARS BALL BEARING CONSTRUCTION 2" NPT SUCTION	STA214-DARLEY	1	$ 24,450.00	
			AKRON 8825 VALVE BODY	88250012-AKRON	2	$ 744.74	
			AKRON F2SS FLANGE W/ 3/4 & SCREEN, 2.5" FEMALE NH SWIVEL	78250309-AKRON	1	$ 302.22	
			AKRON TS HANDLE 7"	78250568-AKRON	1	$ 114.70	

AKRON V1S FLANGE 2.5" VICTAULIC	115312-AKRON	3	$	355.91	
AKRON R1 HANDLE	721238-AKRON	1	$	140.98	
AKRON SPACER HDL STOP FOR 8825	742095-AKRON	1	$	67.32	
2.5 NST M PLUG W/ CHAIN, RL CHROME - INSTALLED TO SUCTION INLET	HPC3008AC-SOUTHPARK	1	$	81.60	
INTAKE ASSY 2.5" VALVE SUPPORT W/ ETCHED LABEL POWDERCOATED BK62, 1/8 ALUM (W/ PASSTHRU)	8825BKTOPEN-RSMECH	1	$	235.00	
INTAKE ASSY 2.5" VALVE SUPPORT W/ ETCHED LABEL POWDERCOATED BK62, 1/8 ALUM	8825BKTCLSD-RSMECH	1	$	230.50	
IC LINKAGE	3040559-05-02-IC	1	$	348.40	
PULL TO CLOSE DECAL / APPLY TO LINKAGE INSERT	SHOP SUPPLIES	1	$	3.00	
SPECIAL SIZE C VERBIAGE LABEL - TANK-PUMP	3000030-01-TANK-PUMP-IC	1	$	3.00	
SWOOP SERIES SIZE C VERBIAGE BEZEL - BLACK	3000255-24-IC	1	$	6.50	
2.5" DOG EAR VALVE BEZEL BLACK FINISH ETCHED: 2.5" SUCTION	SW-DGR001-25SUC-PATRIOTCOMP	1	$	21.96	
ATP VICTAULIC RIGID COUPLING, 2.5", BLACK	251-250RG-ACCESSTRUCK	3	$	262.24	
2"-2.5" VICTAULING COUPLING - REDUCING (BLACK)	251-250X200-ACCESSTRUCK	1	$	218.90	
2-1/2" S10S TEE BUTTWELD A403 304/304L SS WELD FITTING	QQ W3T10-25-WIT	1	$	278.29	
2-1/2" S10S LR 45 ELL BUTTWELD A403 304/304L: STAINLESS STEEL WELD FITTING	QQ W3B10-25-WIT	1	$	214.14	
S10S A312 TP 304 /304L WELDED PE STAINLESS STEEL PIPE IMPORT	QQ IS3W10-25-WIT	1	$	203.30	
2" S10S A312 TP 304/304L WELDED PE STAINLESS STEEL PIPE IMPORT	QQ IS3W10-20-WIT	1	$	199.82	
ATP VICTAULIC RIGID COUPLING, 2.5", BLACK	251-250RG-ACCESSTRUCK	1	$	29.08	
ATP VICTAULIC RIGID COUPLING, 1.5", BLACK	251-150RG-ACCESSTRUCK	1	$	18.25	
ATP VICTAULIC RIGID COUPLING, 2", BLACK	251-200RG-ACCESSTRUCK	1	$	24.08	
1.5AGE FLANGE - WELD	1.5AGE FLANGE-RSMECH	1	$	128.41	
2" S10S A312 TP 304/304L WELDED PE STAINLESS STEEL PIPE IMPORT	QQ IS3W10-20-WIT	2	$	49.64	
2" S10S LR 90 ELL BUTTWELD: A403 304/304L SS WELD FITTING	QQ W3A10-20-WIT	1	$	19.17	
2-1/2" X 2" S10S CONCENTRIC REDUC BUTTWELD A403 304/304L SS WELD FITTING	QQ W3R10-2520-WIT	1	$	81.44	
S10S A312 TP 304 /304L WELDED PE STAINLESS STEEL PIPE IMPORT	QQ IS3W10-25-WIT	2	$	231.60	
2-1/2" X 1-1/2" S10S CONCENTRIC REDUC BUTTWELD A403 304/304L SS WELD FITTING	QQ W3R10-2515-WIT	1	$	90.54	
1-1/2" S10S A312 TP 304/304L WELDED PLAIN END STAINLESS STEEL PIPE	QQ IS3W10-15-WIT	1	$	191.85	
2-1/2" S10S TEE BUTTWELD A403 304/304L SS WELD FITTING	QQ W3T10-25-WIT	1	$	190.79	

7	**PUMP CONTROL SYSTEM**	DARLEY EGOV DIGITROL (24K)	AC02421 EGOV Engine control panel shipped loose / 10' harness Low oil pressure warning and shutdown, high engine temperature warning and shutdown, low pump pressure warning and shutdown, electronic vernier, ECU, audible alarm. Shutdown override	DISCLAIMER	1	$ 350.00	INSTALL LABOR ONLY CONTROLS INCLUDED W 24K DIESEL PUMP
7	**PUMP FUEL SOURCE**	CHASSIS DIESEL (24K)	FUEL PUMP - ELECTRIC IN-LINE TYPE (PROVIDED W/ DARLEY PUMP)	DISCLAIMER	1	$ 175.00	INSTALL LABOR ONLY (INC W/ DARLEY PUMP)
			FUEL PRESSURE REGULATOR HI-PERF (PROVIDED W/ DARLEY PUMP)	DISCLAIMER	1	$ 175.00	INSTALL LABOR ONLY (INC W/ DARLEY PUMP)
			BARRICADE FUEL LINE HOSE - 3/8" 50 PSI	NBH H313-NAPA	8	$ 215.72	
			HOSE CLAMP FUEL INJECTION 3/8	BK 7051227-NAPA	6	$ 19.62	
			FUEL TANK QUICK CONNECT ADAPT 90º, 5/16" X 5/16" (SUPPLY & RETURN)	NAPAVIC-NAPAVIC	2	$ 395.18	
7	**PUMP PANEL BOX OPTIONS**	SWEV STANDARD BOX	SWEV STANDARD PUMP PANEL BOX, BLACK POWDERCOAT - REMOVEABLE FACE BOX TO ACCOMMODATE ALL PUMP / WORK AREA CONTROLS	SW-PUMP1-BOX-PATRIOTCOMP	1	$ 477.74	
			12" PUMP PANEL LIGHT STRIP, WHITE LED / SILICONE HOUSING - MOUNTED TO PUMP PANEL DRIP EDGE UNDERSIDE	12PUMPPANELLIGHT-AMAZON	1	$ 97.50	
7	**PUMP PANEL FACE OPTIONS**	FACE 1: DARLEY EGOV	SEAWESTERN PUMP PANEL FACE #1 (DARLEY EGOV) BLACK FINISH ETCHED: 4 WAY, LOGO	SW-PFACE-001-PATRIOTCOMP	1	$ 70.22	
7	**SUB PANEL BOX OPTIONS**	SWEV EXPANSION PIGGYBACK PANEL & BLANK FACE	SUB PANEL BOX W/ BLANK FACE TO CONTAIN EXPANDED CONTROLS (*SPECIFY*) BOX PC BK62, FACE PC BLACK 60 FACE TO BE CUT FOR JOB SPECIFIC CONTROL MOUNTING NEEDS	SUB PANEL BOX W/FACE-RSMECH	1	$ 639.50	
			6" PUMP PANEL LIGHT STRIP, WHITE LED / SILICONE HOUSING - MOUNTED TO PUMP PANEL DRIP EDGE UNDERSIDE	12PUMPPANELLIGHT-AMAZON	1	$ 97.50	
7	**PUMP REMOTE OIL**	KUBOTA 24 DSL REMOTE OIL	FILTER-OIL, REMOTE, VH1505 REMOTE OIL FILTER KIT + DRAIN	4209819-DARLEY	1	$ 1,264.00	
7	**WATER LEVEL GAUGE**	FRC TANKVISION PRO 400 WATER	LED WATER DISPLAY, TANKVISION PRO 400, PRIMARY: INSTALLED TO PUMP PANEL, TIED TO PUMP IGN POWER	WLA400-A00-FRC	1	$ 1,517.44	
7	**IN CAB SLAVE WATER GAUGE**	FRC TANKVISION WATER MINI	LED WATER DISPLAY, TANKVISION CAB MINI, REMOTE: INSTALLED TO CONSOLE, TIED TO PUMP IGN POWER	WLA205-A00-FRC	1	$ 638.08	
7	**AUXILLARY WATER LEVEL GAUGE**	FRC MAXIVISION - BODY SIDES (DUAL)	LED WATER DISPLAY, MAXVISION, LARGE, REMOTE: INSTALLED TO SIDES OF BODY UPPER FORWARD DOOR FRAME (EA SIDE) L1 / R1 (2), TIED TO VEHICLE PARK SIGNAL VIA SCANPORT	WLA280-A00-FRC	2	$ 1,808.50	
7	**FOAM LEVEL GAUGE**	TANK SIGHT TUBE	N/C REF ONLY - TANK SIGHT WINDOW FOR FOAM LEVEL INCLUDED IN POLYTANK	DISCLAIMER	1	$ -	
7	**MASTER DRAIN**	MASTER DRAIN (STD)	3/8 PUSH X 1/4 MNPT NICKEL 90	W169PLP-6-4-WIT	6	$ 169.64	
			3/8 DOT TUBING BLACK (FT)	1120-6B-BLK-500-WIT	15	$ 213.70	
			VALVE 6 PORT	104961-HALE	1	$ 488.55	
7	**FOAM SYSTEM**	TRIDENT ATP	TRIDENT FOAMATE 1.0 CLASS A SYSTEM	31.008.0-TRIDENT	1	$ 1,610.00	
			1/2 150 304 SS THRD STREET 90 ELBOW P/N 60859	60859-INLANDPIPE	2	$ 11.34	
			3/4X1/2 150 304SS THRD HEX BUSH 60883	60883-INLANDPIPE	2	$ 11.32	
			MAINLINE ML232AB-1/2 1/2 THRD BRASS ECON INLINE SPRING CHECK VLV LF	909078-INLANDPIPE	1	$ 215.28	
			MAINLINE ML5544AB-1/2 1/2 THRD BRASS 2PC FP BALL VLV LF	909178-INLANDPIPE	2	$ 212.86	
			3/8 DOT TUBING BLACK	1120-6B-BLK-500-WIT	4	$ 97.82	
			3/8 DOT TUBING BLUE	1120-6B-BLU-500-WIT	20	$ 139.10	
			3/8 DOT TUBING GREEN	1120-6B-GRN-500-WIT	6	$ 102.98	
			1/2 DOT TUBING RED	1120-8B-RED-500-WIT	3	$ 97.76	
			3/8 PUSH T FITTING TEE	164PLP-6-WIT	1	$ 104.66	

			1/2" X CL S40 NIPPLE WELDED TBE 304/304L SS	QQ N3WST-0500-WIT	4	$	103.18	
			3/8 NPT X 1/2 PUSH (NICKEL) SWIVEL 90° ELBOW	W169PLP 8-6-WIT	1	$	24.14	
			¼ NPT X 3/8 PUSH (NICKEL) SWIVEL 90° ELBOW	W169PLP-6-4-WIT	1	$	13.69	
			½ NPT X 3/8 PUSH (NICKEL) SWIVEL 90° ELBOW	W169PLP-6-8-WIT	1	$	26.37	
			½ NPT X 3/8 PUSH (NICKEL) STRAIGHT	W68PLP-6-8-WIT	2	$	31.94	
7	**RECIRC COOLER SYSTEM & CONTROL / FOAM CONTROL**	SWEV 4 WAY PUMP COOLER AND FOAM SUPPLY SYSTEM	4 WAY VALVE, MOELLER	033304-10-AMAZON	1	$	675.00	
			¼ NPT X 3/8 PUSH (NICKEL) STRAIGHT	W68PLP-6-4-WIT	1	$	99.34	
			¼ NPT X 3/8 PUSH (NICKEL) SWIV 90	W169PLP-6-4-WIT	1	$	101.19	
			3/8 DOT AIR LINE TUBING - BLUE (FT)	1120-6B-BLU-500-WIT	20	$	314.10	
7	**PRIMER**	DARLEY 12V FLUIDLESS (PULL TO PRIME)	Fluid-Less Vane Primer : Positive displacement rotary vane vacuum pump for 20' to 28' suction	AP00960-DARLEY	1	$	2,615.00	
			MEGA FUSE INLINE HOLDER W/ COVER	02980900Z-ROMAINELEC	1	$	102.29	
			400A INLINE MEGA FUSE	AMG400-ROMAINEELEC	1	$	17.66	
			1/2 105 304SS THRD TEE	60865-INLANDPIPE	1	$	51.64	
			1/2 150 304SS THRD CPLG	60871-INLANDPIPE	1	$	50.15	
			1/2 150 304SS THRD 45 ELBOW	61752-INLANDPIPE	3	$	65.08	
			2/0 CABLE, RED [PER FT] (04716-ROMAINEELEC)	SHOP SUPPLIES-ROMAINE	15	$	347.50	
			3/4 DOT TUBING BLACK	1120-12B-BLK-250-WIT	8	$	65.44	
			1/2" X CL S40 NIPPLE WELDED TBE 304/304L SS	QQ N3WST-0500-WIT	4	$	59.43	
			1/2 MNPT X 3/4 COMPRESSION BRASS DOT STRAIGHT	VS68NTA-12-8-WIT	4	$	214.40	
7	**FRONT DISCHARGE**	NONE	NO FRONT DISCHARGES	DISCLAIMER	0	$	-	NO COST / REF ONLY
7	**GROUND SWEEPS**	NONE	NO GROUND SWEEPS	DISCLAIMER	0	$	-	NO COST / REF ONLY
7	**DISCHARGE DISTRIBUTION TO TOPSIDE**	SINGLE SLEEVE TO TOPSIDE OUTLETS	2-1/2" X 1-1/2" S10S TEE BUTTWELD A403 304/304L: STAINLESS STEEL WELD FITTING	QQ W3T10-2515-WIT	1	$	359.81	
			1-1/2" S10S A312 TP 304/304L WELDED PLAIN END STAINLESS STEEL PIPE	QQ IS3W10-15-WIT	10	$	518.50	
			1-1/2" S10S SR 90 ELL BUTTWELD A403 304/304L SS WELD FITTING	QQ W3D10-15-WIT	4	$	412.18	
			ATP VICTAULIC RIGID COUPLING, 1.5", BLACK	251-150RG-ACCESSTRUCK	2	$	36.50	
7	**TOPSIDE PRECONNECT(S)**	SINGLE REAR - ELECTRIC CONTROL	TOPSIDE PRECONNECT TRAY ASSY .125'' 5052 ALUM / ANGLE, WATERJET, FORM AND WELD PER - 2025 / MOD1 TS REAR PC TRAY	TS REAR PC TRAY-RSMECH	1	$	1,124.47	
			TOPSIDE COVER - BLACK VINYL - COVER FOR REAR PC TRAY BLACK VINYL, REINFORCED FRONT, FOLD EDGE (DOUBLED + DOUBLE STICHED) CONTINUOUS BUNGEE ON FLAP, SHOCK CORD KNOBS FOR RETENTION MOUNT TO SHROUD	SEARSTENT-SEARSTENT	1	$	487.50	
			AKRON 8615 1.5 VALVE & ACTUATOR VLV 1.5 V1S X V1S 12V P-A&C	86158008-AKRON	1	$	1,926.60	
			MINI NAVIGATOR W/ 10' HARNESS	93270003-AKRON	1	$	829.96	

			SPECIAL SIZE C VERBIAGE LABEL - REAR PRECONNECT	3000030-01-REAR PRECONNECT-IC	1	$	3.00	
			SPECIAL SIZE C VERBIAGE LABEL - REAR PRECONNECT	3000030-01-REAR PRECONNECT-IC	1	$	3.00	
			2-1/2" X 1-1/2" S10S TEE BUTTWELD A403 304/304L: STAINLESS STEEL WELD FITTING	QQ W3T10-2515-WIT	1	$	272.31	
			1-1/2" S10S A312 TP 304/304L WELDED PLAIN END STAINLESS STEEL PIPE	QQ IS3W10-15-WIT	5	$	259.25	
			ATP VICTAULIC RIGID COUPLING, 1.5", BLACK	251-150RG-ACCESSTRUCK	2	$	36.50	
			1-1/2" S10S LR 90 ELL BUTTWELD A4 304/304L SS WELD FITTING	QQ W3A10-15-WIT	1	$	15.47	
			1.5 NPT F X 1.5 NST M IL-35 INTERNAL LUG COUPLING, CHROME	IL3504AC-SOUTHPARK	1	$	176.98	
7	**HOSE REEL MODEL**	TOPSIDE DUAL	MODEL: EF4038-17-18 LT 12V 227 MOTOR, 1" 90 DEGREE SUPER SWIVEL JOINT W/ VITON, 1" MALE RISER, BEARING MOUNTED STRAP BRAKE, FH-330 TOP WIND, PAINT BLACK. (NO HOSE) CAPACITY: 125' 1" / 200' 3/4 MOUNTED TO TOP OF BODY LH SIDE (SPECIFY REEL FORWARD OR REEL MID PLACEMENT)	EF4038-17-18 LT-HANNAY	1	$	2,380.00	
			MODEL: EF4038-17-18 RT 12V 227 MOTOR, 1" 90 DEGREE SUPER SWIVEL JOINT W/ VITON, 1" MALE RISER, BEARING MOUNTED STRAP BRAKE, FH-330 TOP WIND, PAINT BLACK. (NO HOSE) CAPACITY: 125' 1" / 200' 3/4 MOUNTED TO TOP OF BODY RH SIDE (SPECIFY REEL FORWARD OR REEL MID PLACEMENT)	EF4038-17-18 RT-HANNAY	1	$	2,380.00	
7	**REEL ENCLOSURE**	NONE	NO L3 OR R3 POSITION REAR DECK OUTBOARD HOSE REEL ENCLOSURES ADDED	DISCLAIMER	0	$	-	NO COST / REF ONLY
7	**HOSE REEL REWIND(S)**	TOPSIDE DUAL: BEDRAIL/ INLINE	PUSH BUTTON MOMENTARY REWIND BUTTONS BUTTON MOUNTED TO BEDRAIL INLINE W/ HOSE REELS (EA SIDE)	90030-HANNAY	2	$	217.00	
			BUSSMAN 40 AMP MANUAL RESET BREAKER	RES185-40-ROMAINEELEC	2	$	353.00	
			BLACK BEZELS ETCHED "REWIND" (INSTALLED TO REWIND BUTTONS)	SW-DG005-RWND-PATRIOTCOMP	2	$	43.90	
7	**HOSE REEL DISCHARGE PLUMBING**	TOPSIDE DUAL - FORWARD	1-1/2" X 1" S10S CONCENTRIC REDUC BUTTWELD A403 304/304L SS WELD FITTING	QQ W3R10-1510-WIT	1	$	62.53	
			1-1/2" S10S A312 TP 304/304L WELDED PLAIN END STAINLESS STEEL PIPE	QQ IS3W10-15-WIT	2	$	208.70	
			1" S10S A312 TP 304/304L WELDED PLAIN END STAINLESS STEEL PIPE	QQ IS3W10-10-WIT	8	$	444.08	
			1" S10S LR 90 ELL BUTTWELD A403 304/304L SS WELD FITTING	QQ W3A10-10-WIT	2	$	68.47	
			1" S10S TEE BUTTWELD A403 304/304L SS WELD FITTING	QQ W3T10-10-WIT	1	$	76.43	
			ATP VICTAULIC RIGID COUPLING, 1.5", BLACK	251-150RG-ACCESSTRUCK	1	$	18.25	
			1-1/2" S10S SR 90 ELL BUTTWELD A403 304/304L SS WELD FITTING	QQ W3D10-15-WIT	4	$	368.43	
			ATP VICTAULIC RIGID COUPLING, 1", BLACK	251-100RG-ACCESSTRUCK	5	$	99.60	
			BODY S/A 1.0 L/HDL F/TS	88100010-AKRON	2	$	572.60	
			ADPT V1S 1.0 VLV S/O MCH CS	105999-AKRON	2	$	533.95	
			P1-S 1" FEMALE NPT	104976-AKRON	2	$	180.55	
			HANDLE TS 1.5 5"LENGTH CP VLV S/O#	78150064-AKRON	2	$	135.72	
			PLATE HDL STOP 1.5" 303 ST STL	742074-AKRON	2	$	21.88	
			1" VALVE BEZEL LABEL PC BLACK, LASER ETCHED "BOOSTER REEL"	SW-DGR002-1BR-PATRIOTCOMP	2	$	43.92	
			1" PIPE STANDARD SERIES COMPLETE CLAMP	BEH S51315-PP-WIT	4	$	31.08	
7	**DRIVER DECK DISCHARGE ASSY**	1.5" DISCHARGE - LH REAR BEDRAIL OF PLATFORM	1.5 BRASS NPT HEX PLUG	60VR16-GRAINGER	1	$	20.00	

			ATP VICTAULIC RIGID COUPLING, 1.5", BLACK	251-150RG-ACCESSTRUCK	2	$	36.50
			1.5 INCH PIPE WELD CLAMP	BEH SH61900-PP-WIT	2	$	65.46
			1-1/2" S10S A312 TP 304/304L WELDED PLAIN END STAINLESS STEEL PIPE	QQ IS3W10-15-WIT	6	$	276.10
			1-1/2" S10S SR 90 ELL BUTTWELD A403 304/304L SS WELD FITTING	QQ W3D10-15-WIT	1	$	168.67
			ADPT V1S 1.5"S/O VLV MCH	115243-AKRON	1	$	135.35
			8815 VALVE BODY	88150020-AKRON	1	$	362.37
			HANDLE TS 1.5 5"LENGTH CP VLV S/O#	78150064-AKRON	1	$	67.86
			PLATE HDL STOP 1.5" 303 ST STL	742074-AKRON	1	$	54.69
			ADPT M1S NH 1.5 VLV S/O MCH CS	104981-AKRON	1	$	99.86
			1.5" VALVE DECK LEVEL VALVE SUPPORT, MOUNTED TO INLET FLANGE BOLTS, POWDERCOAT BK62	8815BKTDECK-RSMECH	1	$	15.80
			1.5" VALVE BEZEL LABEL PC BLACK, LASER ETCHED "1.5" DISCHARGE"	SW-DG004-15DC-PATRIOTCOMP	1	$	21.96
			1.5 NST F CAP W/ CHAIN, RL CHROME - INSTALLED	HCC2804AC-SOUTHPARK	1	$	36.00
7	**OFFICER SIDE DISCHARGE DISTRIBUTION ASSY**	STANDARD CORNER DISTRIBUTION	2" S10S SR 90 ELL BUTTWELD A403 304/304L SS WELD FITTING	QQ W3D10-20-WIT	1	$	114.86
			2-1/2" S10S A312 TP 304 /304L WELDED PE STAINLESS STEEL PIPE IMPORT	QQ IS3W10-25-WIT	1	$	72.05
			2.5 INCH PIPE WELD CLAMP	BEH SH72875-PP-WIT	1	$	70.40
			ATP VICTAULIC RIGID COUPLING, 2.5", BLACK	251-250RG-ACCESSTRUCK	1	$	29.08
7	**DISCHARGE SUB ASSY - TANK FILL**	STANDARD TANK FILL	2-1/2" S10S A312 TP 304 /304L WELDED PE STAINLESS STEEL PIPE IMPORT	QQ IS3W10-25-WIT	2	$	231.60
			ATP VICTAULIC RIGID COUPLING, 2.5", BLACK	251-250RG-ACCESSTRUCK	2	$	58.16
			2-1/2" X 1-1/2" S10S TEE BUTTWELD A403 304/304L: STAINLESS STEEL WELD FITTING	QQ W3T10-2515-WIT	1	$	447.31
			1-1/2" S10S A312 TP 304/304L WELDED PLAIN END STAINLESS STEEL PIPE	QQ IS3W10-15-WIT	3	$	225.55
			1-1/2" S10S LR 90 ELL BUTTWELD A4 304/304L SS WELD FITTING	QQ W3A10-15-WIT	1	$	59.22
			1-1/2" S10S SR 90 ELL BUTTWELD A403 304/304L SS WELD FITTING	QQ W3D10-15-WIT	1	$	124.92
			ATP VICTAULIC RIGID COUPLING, 1.5", BLACK	251-150RG-ACCESSTRUCK	2	$	36.50
			2.5 INCH PIPE WELD CLAMP	BEH SH72875-PP-WIT	2	$	140.80
			1.5" DOG EAR VALVE BEZEL BENT TO 90DEG BLACK FINISH ETCHED: TANK FILL	SW-DGR003-15TF-PATRIOTCOMP	1	$	21.96
			1.5 BRASS NPT HEX PLUG	60VR16-GRAINGER	1	$	20.00
			ADPT V1S 1.5"S/O VLV MCH	115243-AKRON	2	$	182.95
			8815 VALVE BODY	88150020-AKRON	1	$	362.37
			HANDLE TS 1.5 5"LENGTH CP VLV S/O#	78150064-AKRON	1	$	67.86
			PLATE HDL STOP 1.5" 303 ST STL	742074-AKRON	1	$	10.94

7	**SPECIALTY / CUSTOM DISCHARGE(S)**	CUSTOM OPT-00273	SPOKANE SPEC CUSTOM OS DISCHARGE ASSY: 2.5" AKRON VALVE IN STANDARD LOWER SPEC LOCATION, BEHRINGER DECK CLAMP SUPPORT, STANDARD HANDLE, WITH CHROME CAP - FULL FLOW, 2.5" VIC ATTACHMENT BACKSIDE VALVE	SWEV CUSTOM	**1**	**$ 1,300.00**	PENDING FINAL DESIGN APPR FOR FULL BOM BUILD OUT - SEE PRELIM PRINTS
8	**BOOSTER HOSE**	1" LIGHTWEIGHT BOOSTER (NH FIELD REPLACEABLE)	1" BOOSTER HOSE - 300PSI, LIGHTWEIGHT, W/ FIELD REPLACEABLE COUPLINGS (100 FT)	BX10R-100-RED-MATEX	**2**	**$ 1,398.00**	
8	**BOOSTER NOZZLE(S)**	DUAL / NH: C&S 110/23	C&S 110/23 DUAL GALLONAGE BOOSTER NOZZLE, 1" FNH (QTY 2)	110/23-CnS	**2**	**$ 330.00**	
8	**DRIP TORCH MOUNTS**	SINGLE STATIC MNT	SINGLE DRIP TORCH MOUNT, DEPT TO SPECIFY PLACEMENT: TOPSIDE ACCESS TREAD LID ALONG PC ENCLOSURE	DT125-MB-CnS	**1**	**$ 165.00**	
8	**DRIP TORCHES**	SINGLE DRIP TORCH	C&S SUPPLY DRIP TORCH 1.25 GAL, INCLUDED (QTY 1)	DT125-CnS	**1**	**$ 405.00**	
8	**REAR HOSE HOOK**	SWEV ALUM HOSE HOOK ASSY	REMOVEABLE HOSE HOOK KIT, DUAL REC MOUNTS AND SINGLE ALUM 1"SQ TUBE HOOK / MOUNT PER PRINTS	HOSE HOOK-RSMECH	**2**	**$ 1,475.00**	
8	**FLASHLIGHTS - MOUNT & WIRE**	NONE	NO FLASHLIGHTS TO BE INCLUDED OR INSTALLED	DISCLAIMER	**0**	**$ -**	NO COST / REF ONLY
8	**HARD SUCTION**	2.5" X BODY LENGTH - NH (2)	2.5 SPIRAL SUCTION HOSE (FT)	S115-2.5-A1IND	**20**	**$ -**	
			PROVIDED BARREL STRAINER, 2.5" FNH RIGID, ANODIZED ALUM	HTBS-25NH-HARRINGTON	**1**	**$ 125.71**	
			COUPLINGS 2.5" NH	7725-REDHEAD	**2**	**$ 293.50**	
8	**REAR GRAB HANDLES**	STANDARD (2@18")	4' KNURLED GRAB BAR	S4000RAILXX4-HANSEN	**1**	**$ 166.49**	
			STANCHION, CHROME	CR-383036-HANSEN	**4**	**$ 201.50**	
8	**HITCH STEP**	SWEV FOLDING HITCH STEP SHACKLE	SWEV HITCH STEP / REC MOUNT SHACKLE COMBO FLIP STEP ON DROP, 2.5" HITCH MOUNT, ACCEPTS / ADAPTS TO 2" & PRE INST W/ INCLUDED 2" HITCH SHACKLE, DOUBLE PINS, W/ INTEGRATED LIGHT	HITCH FOLDING DROP STEP ASSY-SWEV	**1**	**$ 414.00**	
8	**PAC MOUNT - BOOSTER NOZZLE(S)**	DUAL / PAC 1004	BOOSTER NOZZLE MOUNT, TO EA REEL BASE, PAC 1004 (2)	1004-PAC : 1004-Black-PAC	**2**	**$ 91.90**	
8	**PORTABLE RADIO CHARGERS - MOUNT & WIRE**	DEPT SUPPLIED CHARGER(S) MOUNT & WIRE	INSTALL DEPT SUPPLIED PORTABLE RADIO CHARGERS TO BACK OF HAVIS CONSOLE, WIRE TO CONSTANT POWER (SHOP SUPPLIES A/N TO COMPLETE)	SHOP SUPPLIES	**1**	**$ 200.00**	
8	**TOW HOOK / SHACKLE (ADDED)**	NONE	NO ADDED TOW HOOK SHACKLE FOR FRONT BUMPER	DISCLAIMER	**0**	**$ -**	NO COST / REF ONLY
8	**SPANNER / HYD WRENCH SET (MOUNTED)**	NONE	NO SPANNER / HYD WRENCH SET INCLUDED	DISCLAIMER	**0**	**$ -**	NO COST / REF ONLY
8	**WHEEL CHOCKS AND MOUNTS**	AC-32W W HORIZONTAIL MOUNT - PAIR	HORIZONTAL HOLDER FOR AC-32W (SHIP LOOSE)	3025-195-000-ZICO	**2**	**$ 308.40**	
			ZICO WILDLAND COMPLIANT WHEEL CHOCK, AC-32W	3025-192-000-ZICO	**2**	**$ 520.88**	
8	**CUSTOM: ADDED LOOSE EQUIP**	NONE	NO CUSTOM ADDED LOOSE EQUIPMENT	DISCLAIMER	**0**	**$ -**	NO COST / REF ONLY
8	**INTERNAL ENGINEERING**	SWEV DESIGN ENGINEERING	SWEV PROJECT INTERNAL DESIGN TIME AND ENGINEERING	LCA-APPARATUS ENGINEERING	**1**	**$ 1,250.00**	
8	**FINAL INSPECTION**	FINAL INSPECTION: ON SITE @ SWEV	FINAL INSPECTION, TRAINING, AND APPARATUS ACCEPTANCE IN PERSON ON SITE AT SWEV (YAKIMA, WA)	DISCLAIMER	**1**	**$ -**	NO COST / REF ONLY
8	**DELIVERY**	DELIVERY: AGENCY DRIVEAWAY	CUSTOMER TO DRIVEAWAY UNIT AFTER FINAL INSPECTION AND ACCEPTANCE	DISCLAIMER	**1**	**$ -**	NO COST / REF ONLY
						$ -	
						$ -	
						$ 334,778.73	**SUBTOTAL**
				YAK MVT		**$ 30,464.86**	**9.10%**
						$ 365,243.59	**TOTAL**

$ 1,004,336.19	2 UNIT SUBTOTAL	
YAK MVT	**$ 91,394.59**	**9.10%**
$ 1,095,730.78	2 UNIT TOTAL	











RIDGEHOUND EMERGENCY VEHICLES

PROJECT DETAILS:

CUSTOMER:	CITY OF SPOKANE FIRE DEPARTMENT
TITLE:	MODEL 1 - REVISION 1
DATE:	9/26/2026
PROJECT MGR:	J. KOFFLER
SALESMAN:	S. LYNN

CHASSIS INFO:

CHASSIS:	2027 FORD F550 SD, 60"CA, CREW CAB, 4X4
ENGINE:	6.7L POWERSTROKE
FUEL:	DIESEL
MODIFICATIONS:	NONE
SUSPENSION:	BUCKSTOP STAGE III SRW / PETLAS
UPPER PAINT:	FACTORY
LOWER PAINT:	FACTORY
OTHER:	N/A

BODY INFO:

BODY TYPE:	HPI RIDGEHOUND MODEL 1, ALUMINUM
BODY FINISH:	POWDERCOAT (MATCH)
DOOR:	VERTICAL SWING, L1 & R1 SWING OUT
DOOR FINISH:	POWDERCOAT (MATCH)
BOX LIGHTING:	FRC SUNSTRIP DUAL, + 45" TUNNEL
TOPSIDE LAYOUT:	STANDARD LH / RH BASKETS FWD COFFIN
DECK CONFIG:	STANDARD

COMPARTMENT INFO:

L1/R1:	26"W X 51.5"H X 18"D
CNTR:	TBD"W X 31.5"H X 60"D
L2:	56"W X 31.5"H X 18"D
L3:	CORNER HEX PUNCH GUARD
R2:	56"W X 31.5"H X 18"D
R3:	32"W X 31.5"H X 18"D
OTHER:	TOPSIDE(S), STD APRON HOSEBOX

SUPPRESSION INFO:

TANK CAPACITY:	UPF 400 (441) GAL CUSTOM POLY TANK
FOAM CELL:	INTEGRATED, 10 (11) GAL
PUMP:	DARLEY 1.5AGE 24K (3.17)
FUEL SOURCE:	CHASSIS DIESEL
PRIMER:	DARLEY FLUIDLESS 12V
PUMP CONTROLS:	DARLEY EGOV DIGITROL PRIMARY
CAB CONTROLS:	NONE
VALVE TYPE:	AKRON BRASS SWING OUT
BOOSTER REEL(S):	TOPSIDE DUAL - FWD
FRONT DC:	NONE
REAR DC:	LH DECK 1.5 AKR / RH DECK 2.5 AKR (SPOKANE - CUST)
AUX. DC:	NONE
PRECONNECT(S):	SINGLE REAR AKR 1.5 TOPSIDE MINI NAV CONT
TANK FILL:	1.5 AKR STANDARD
INTAKE / TANK-P:	2.5 INLET AKR / 2.5 T-P AKR (LINKAGE)
HYDRANT FILL:	NONE

All dimensions shown are approximate and subject to change as may be found necessary during final engineering, fabrication, installation, or construction of the apparatus. Minor details, hardware, routing, fasteners, trim, and other non-essential features may not be shown in order to maintain clarity and readability of the drawing. Drawings are provided for general reference and configuration visualization only.
Certain components may be illustrated for representative purposes and may not reflect the final manufacturer, model, mounting method, exact location, quantity, or appearance. Conversely, some components, options, and selected features may be intentionally omitted, simplified, obscured, or not fully depicted within the drawings to preserve clarity, simplicity, and overall understandability.
The inclusion or exclusion of any item, feature, or component on these drawings does not by itself constitute inclusion or exclusion from the final delivered apparatus. In the event of any discrepancy between the drawings, proposal, work-up, purchase documents, or specifications, the final approved specifications shall govern and constitute the final authority for all equipment and features supplied with the apparatus.
These drawings and all information contained within them are proprietary and confidential property of Ridgehound Emergency Vehicles. They are provided solely for the recipient's evaluation of the proposed apparatus and may not be copied, reproduced, distributed, published, transmitted, or shared with any third party without prior written authorization from Ridgehound.

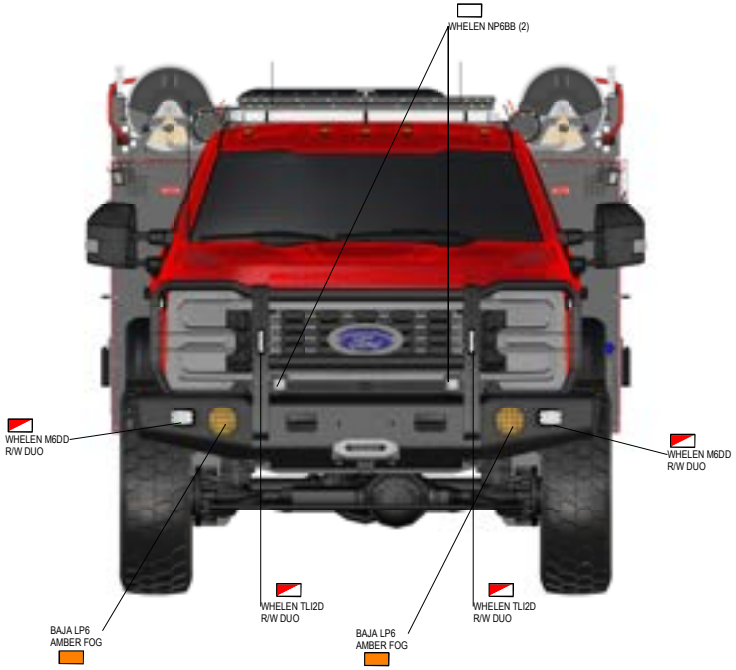

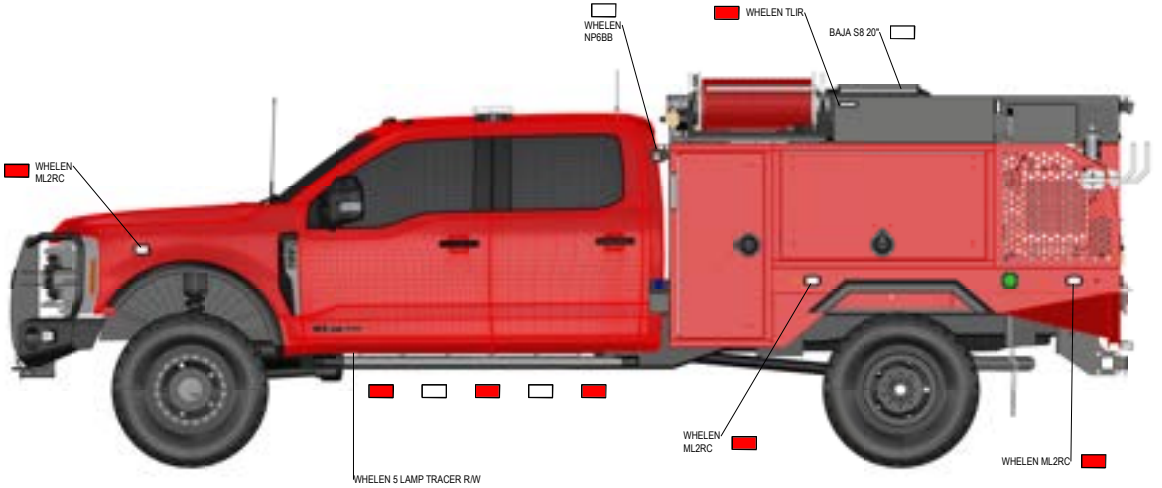

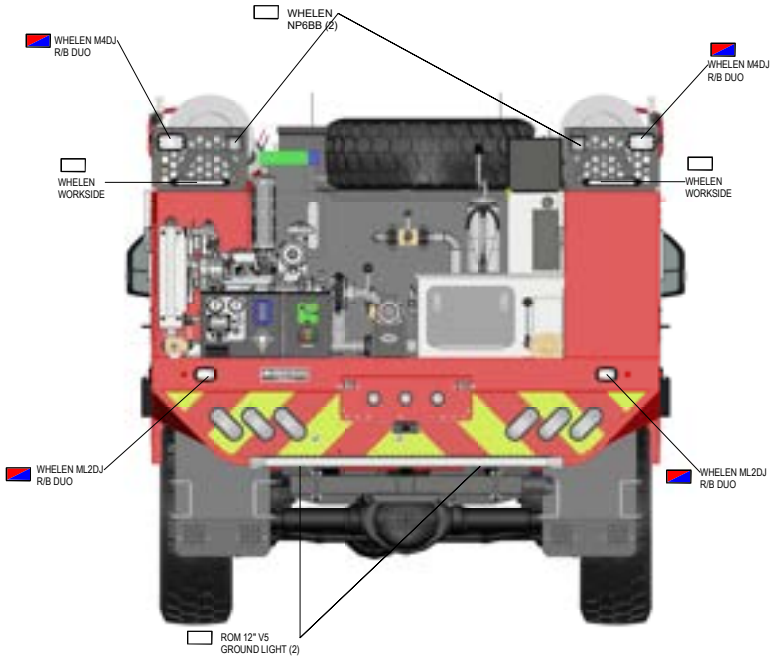

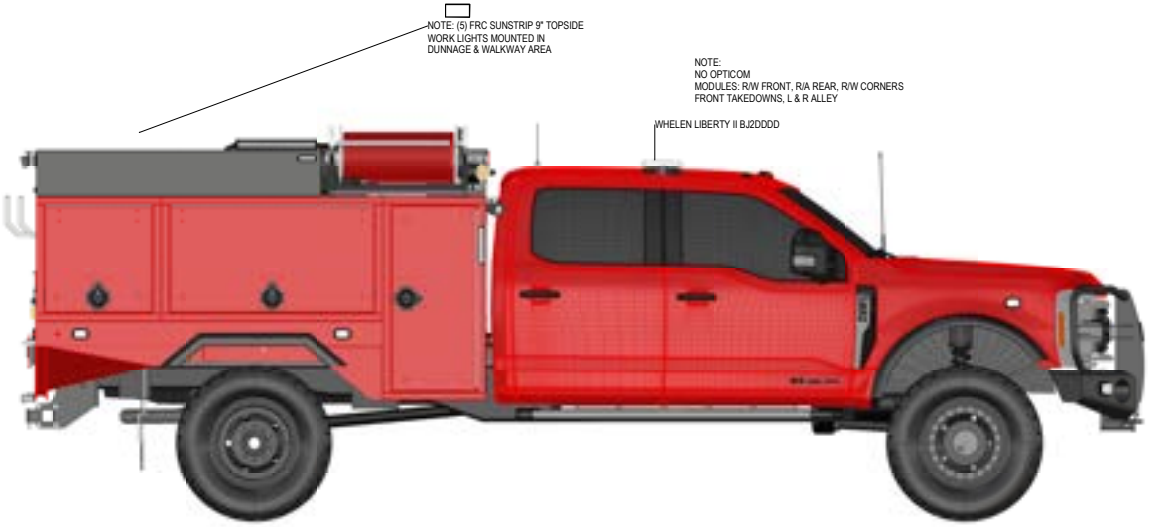

DITTO ANNOTATIONS - LH / RH MATCHED

RIDGEHOUND EMERGENCY VEHICLES

PROJECT DETAILS :	
CUSTOMER :	CITY OF SPOKANE FIRE DEPT
TITLE :	MOD 1 REV 1
DATE :	9/26/2026
DRAFTSMAN :	J. KOFFLER



RIDGEHOUND
EMERGENCY VEHICLES

PROJECT DETAILS :	
CUSTOMER :	CITY OF SPOKANE FIRE DEPT
TITLE :	MOD 1 REV 1
DATE :	9/26/2026
DRAFTSMAN :	J. KOFFLER



RIDGEHOUND
EMERGENCY VEHICLES

PROJECT DETAILS :	
CUSTOMER :	CITY OF SPOKANE FIRE DEPT
TITLE :	MOD 1 REV 1
DATE :	9/26/2026
DRAFTSMAN :	J. KOFFLER



RIDGEHOUND
EMERGENCY VEHICLES

PROJECT DETAILS :	
CUSTOMER :	CITY OF SPOKANE FIRE D
TITLE :	MOD 1 REV 1
DATE :	9/26/2026
DRAFTSMAN :	J. KOFFLER





RIDGEHOUND
EMERGENCY VEHICLES

PROJECT DETAILS :	
CUSTOMER :	CITY OF SPOKANE FIRE DEPT
TITLE :	MOD 1 REV 1
DATE :	9/26/2026
DRAFTSMAN :	J. KOFFLER









RIDGEHOUND
EMERGENCY VEHICLES

PROJECT DETAILS :	
CUSTOMER :	CITY OF SPOKANE FIRE DEPT
TITLE :	MOD 1 REV 1
DATE :	9/26/2026
DRAFTSMAN :	J. KOFFLER

Agenda Sheet for City Council:

Committee: PIES **Date:** 11/10/2026

Committee Agenda type: Reports, Contracts & Claims

Council Meeting Date: 12/02/2026

Date Rec'd	11/3/2026		
Clerk's File #	OPR 2022-0709		
Cross Ref #			
Project #			
Submitting Dept	SOLID WASTE DISPOSAL	**Bid #**	IRFP 5616-22
Contact Name/Phone	TRACE 509-625-6524	**Requisition #**	CR 29101
Contact E-Mail	TBRADBURN@SPOKANECITY.ORG		
Agenda Item Type	Contract Item		
Council Sponsor(s)	KKLITZKE		
Sponsoring at Administrators Request	NO		
Lease? NO	**Grant Related?** NO	**Public Works?** NO	
Agenda Item Name	CONTRACT RENEWAL FOR AIR EMISSIONS COMPLIANCE TESTING		

Agenda Wording

Contract renewal 4 of 4 with Deeco, Inc. (Raleigh, NC) for air emissions compliance testing at the Waste to Energy Facility from 1/1/2027 - 12/31/2027 and a total cost not to exceed $155,000.00, plus tax.

Summary (Background)

Annual emissions testing, including the annual Relative Accuracy Test Audit (RATA) of the Continuous Emissions Monitoring System is required by the operating permits for the Waste to Energy Facility. In 2022, based on their response to IRFP 5616-22, Deeco, Inc. was awarded a one year contract for this testing with the possibility of four (4) additional one-year renewals. This will be the final renewal and pricing will remain unchanged.

What impacts would the proposal have on historically excluded communities?

No impacts are identified. Public works services and projects are designed to serve all citizens and businesses. We strive to offer a consistent level of service to all, to distribute public investment throughout the community and to respond to gaps in services identified in various City plans. We recognize the need to maintain affordability and predictability for all solid waste customers and are committed to being financially and environmentally responsible.

How will data be collected, analyzed, and reported concerning the effect of the program/policy by racial, ethnic, gender identity, national origin, income level, disability, sexual orientation, or other existing disparities?

This routine expense is necessary to continue to provide solid waste services in support of all ratepayers. It will not impact race, gender identity, national origin, income level, disability, sexual orientation or other existing disparities.

How will data be collected regarding the effectiveness of this program, policy, or product to ensure it is the right solution?

Public Works follows the City's established procurement and public works bidding regulations and policies to bring items forward and then uses contract management best practices to ensure desired outcomes and regulatory compliance.

Describe how this proposal aligns with current City Policies, including the Comprehensive Plan, Sustainability Action Plan, Capital Improvement Program, Neighborhood Master Plans, Council Resolutions, and others?

This work is consistent with annual budget strategies to limit costs and approved projects in the 6-year CIP.

Council Subcommittee Review

n/a

Fiscal Impact

Approved in Current Year Budget?	YES
Total Cost	$ 155,000.00
Current Year Cost	$
Subsequent Year(s) Cost	$

Narrative

This is a professional services expense that is planned for annually in the Solid Waste Disposal budget and is a requirement of the Waste to Energy's operating permits.

Amount		Budget Account
Expense	$ 155,000.00	# 4490-44100-37148-54940
Select	$	#
Select	$	#
Select	$	#
Select	$	#
Select	$	#

Funding Source	Recurring
Funding Source Type	Program Revenue

Is this funding source sustainable for future years, months, etc?

Yes

Expense Occurrence	Recurring

Other budget impacts (revenue generating, match requirements, etc.)

Approvals		Additional Approvals	
Dept Head	BRADBURN, TRACE	PURCHASING	PRINCE, THEA
Division Director	FEIST, MARLENE		
Accounting Manager	ALBIN-MOORE, ANGELA		
Legal	FAIRBORN, KATHERINE		
For the Mayor	PICCOLO, MIKE		

Distribution List	
Marc Hamilton, deeco@deeco.com	mdorgan@spokanecity.org
jsalstrom@spokanecity.org	tprince@spokanecity.org
rrinderle@spokanecity.org	

4Clerk's No. OPR 2022-0709

City of Spokane

CONTRACT RENEWAL #4 of 4

Title: AIR EMISSIONS COMPLIANCE TEST PROGRAM

THIS CONTRACT RENEWAL is made and entered into by and between the **CITY OF SPOKANE**, a Washington municipal corporation "(City"), and **DEECO, INC.,** whose address is 3404 Lake Woodard Road, Raleigh, North Carolina 27604 ("Consultant"), individually hereafter referenced as a "Party", and together as the "Parties".

WHEREAS, the Parties entered into a Contract wherein the Consultant agreed to conduct The Air Emissions Compliance Test Program at the Spokane Waste to Energy Facility, in accordance with IRFP 5616-22; and

WHEREAS, the original Contract provided for four (4) one-year (1) renewals with this being the fourth of those renewals, therefore the original contract needs to be formally renewed by this written Contract Renewal document; and

NOW, THEREFORE, in consideration of these terms, the Parties mutually agree as follows:

1. CONTRACT DOCUMENTS.
The original Contract, dated October 12, 2022, and October 13, 2022, any previous amendments, renewals and / or extensions / thereto, are incorporated by reference into this document as though written in full and shall remain in full force and effect except as provided herein.

2. EFFECTIVE DATE.
This Contract Renewal shall become effective on January 1, 2027, and shall end December 31, 2027.

3. COMPENSATION.
The City shall pay an estimated maximum annual cost not to exceed **ONE HUNDRED FIFTY-FIVE THOUSAND AND NO/100 DOLLARS ($155,000.00)** plus tax if applicable, for everything furnished and done under this Contract Renewal. This is the maximum amount to be paid under this Renewal, and shall not be exceeded without the prior written authorization of the City, memorialized with the same formality as the original Contract and this Contract Renewal document.

4. DEBARMENT AND SUSPENSION.
The Consultant has provided its certification that it is in compliance with and shall not contract with individuals or organizations which are debarred, suspended, or otherwise excluded from or

ineligible from participation in Federal Assistance Programs under Executive Order 12549 and "Debarment and Suspension", codified at 29 CFR part 98.

IN WITNESS WHEREOF, in consideration of the terms, conditions and covenants contained, or attached and incorporated and made a part, the parties have executed this Contract Renewal by having legally-binding representatives affix their signatures below.

DEECO, INC.	**CITY OF SPOKANE**
By_____	By_____
Signature Date	Signature Date
_____	_____
Type or Print Name	Type or Print Name
_____	_____
Title	Title
Attest:	Approved as to form:
_____	_____
City Clerk	Assistant City Attorney

Attachments that are part of this Agreement:

Exhibit A - Certificate of Debarment
Exhibit B - Consultant's Cost Proposal dated October 7, 2026

26-297

EXHIBIT A

CERTIFICATION REGARDING DEBARMENT, SUSPENSION, INELIGIBILITY AND VOLUNTARY EXCLUSION

1. The undersigned (i.e., signatory for the Subrecipient / Contractor / Consultant) certifies, to the best of its knowledge and belief, that it and its principals:

   a. Are not presently debarred, suspended, proposed for debarment, declared ineligible, or voluntarily excluded from covered transactions by any federal department or agency;
   b. Have not within a three-year period preceding this contract been convicted or had a civil judgment rendered against them for commission of fraud or a criminal offense in connection with obtaining, attempting to obtain, or performing a public (federal, state, or local) transaction or contract under a public transaction; violation of federal or state antitrust statutes or commission of embezzlement, theft, forgery, bribery, falsification or destruction of records, making false statements, tax evasion, receiving stolen property, making false claims, or obstruction of justice;
   c. Are not presently indicted or otherwise criminally or civilly charged by a government entity (federal, state, or local) with commission of any of the offenses enumerated in paragraph (1)(b) of this certification; and,
   d. Have not within a three-year period preceding this contract had one or more public transactions (federal, state, or local) terminated for cause or default.

2. The undersigned agrees by signing this contract that it shall not knowingly enter into any lower tier covered transaction with a person who is debarred, suspended, declared ineligible, or voluntarily excluded from participation in this covered transaction.

3. The undersigned further agrees by signing this contract that it will include the following clause, without modification, in all lower tier covered transactions and in all solicitations for lower tier covered transactions:

   Certification Regarding Debarment, Suspension, Ineligibility and Voluntary Exclusion – Lower Tier Covered Transactions

   1. The lower tier contractor certified, by signing this contract that neither it nor its principals is presently debarred, suspended, proposed for debarment, declared ineligible, or voluntarily excluded from participation in this transaction by any federal department or agency.

   2. Where the lower tier contractor is unable to certify to any of the statements in this contract, such contractor shall attach an explanation to this contract.

4. I understand that a false statement of this certification may be grounds for termination of the contract.

Name of Subrecipient / Contractor / Consultant (Type or Print)	Program Title (Type or Print)
Name of Certifying Official (Type or Print) Title of Certifying Official (Type or Print)	Signature Date (Type or Print)

EXHIBIT B

COST PROPOSAL

The Overall Project Costs for Compliance Testing Program (Tasks 1, 2, 3, 4, 5, and 6) are presented in Table 1. The overall costs for Task 2 are presented in Table 2 and the breakdown of the analytical costs is presented in Table 3. **These costs are effective from 1/1/2026 through 8/31/2026.** ***All field staff will be DEECO employees.*** The schedule with number of employees is shown in Table 4.

DEECO standard costs are presented in Table 5. The delay rate will be $75.00 per man hour plus per diem ($230/day/man) and $8,200 for an eight (8) hr day with per diem and equipment charges.

TABLE 1
OVERALL PROJECT COSTS FOR TASKS 1, 2, 3, 4, 5, AND 6

Task No.	Scope of Work	Costs
1	Develop Protocol	$0
2	Compliance test conducted on all both boilers in accordance with the requirements under 40 CFR 60.58b and 40 CFR 60.38b and 2025 report format (Dioxin, PAH, & PCB on only one Unit)	$122,695 (Subtract $9,300)
3	Sampling and Analytical Clarifications	N/A
4	RATA on both units including test report	$17,000
5*	Acquisition and Analysis of Audit Samples Method 23** Method 8 (1 req'd) Method 13B (1 req'd) Method 26 (1 req'd) Method 29 for 8 Metals (2 req'd) Method 29 for Mercury (2 req'd)	 N/A $218 $278 $273 $895 $806
6	Compliance Test Report (See Table 2 and 3 for details)	$2,850
Total	Total of Tasks 1, 2, 3, 4, 5, and 6 with all options (Dioxin, PAH, & PCB on only one Unit)	**$145,015** (Subtract $9,300)

* Per EPA's EMC website, at the time of this writing, two or more Approved Audit Sample providers do not exist. Prices are based on the best available information at the time of this writing. All will be billed at cost.

**Not available at the time of this writing, but will be ordered and billed at cost for acquisition and analysis if available 60 days prior to compliance testing.

Pricing unchanged for January 1, 2027 - December 31, 2027

Pricing unchanged for January 1, 2027 - December 31, 2027

TABLE 2
PROJECT COST BREAKDOWN FOR TASK 2

Task	Comments	Cost
Mobilization/Demobilization	Preparation and calibrations	$3,700
Travel	Travel to and from Site	$26,490
Stack Sampling	Testing with a staff of 10	$50,315
Analytical Costs From Table 3	Stack Samples	$42,190
Total Costs for Sampling and Analytical Program		**$122,695**

TABLE 3
ANALYTICAL COST BREAKDOWN FOR TASK 2

Type of Sample	Parameter	Cost per Sample	No. of Samples	Total Cost
Stack Gases	Particulate* (incl Condensables)	$295	7 (6 runs, plus RB)	$2,065
	HF and Cr^{+6}*	$285	8 (6 runs, plus RB & FB)	$2,280
	NH3*	$235 (all fractions)	7 (6 runs, plus RB) (3 fractions/run)	$1,645
	HCl* (Inlet)	$65	7 (6 runs, plus RB)	$455
	HCl* (Outlet)	$65	6 (3 fractions/run)	$1,170
	H2SO4*	$95	7 (6 runs, plus RB)	$665
	Metals*	$265	11 (8 runs, plus PB, RB & FB)	$2,915
	Mercury* (Inlet/Outlet)	$275	19 (16 runs, plus PB, RB & FB)	$5,225
	PCDD/PCDF** PAHs** PCBs** XAD-2 Traps**	$1,350 $800 $800 $150	8 8 8 10 (6 runs, plus FTPB and FB)	$10,800 $6,400 $6,400 $1,500
	Biogenic Carbon Bag	$670	1 (represents entire test)	$670
Total 2026 Anticipated Analytical Costs				**$42,190**

*** - Analyses performed by Element One**
**** - Analyses performed by SGS North America (formerly Analytical Perspectives)**

Pricing unchanged for January 1, 2027 - December 31, 2027

Pricing unchanged for January 1, 2027 - December 31, 2027

TABLE 4
COMPLIANCE TESTING DAILY (DATES TBD) SCHEDULE FOR TASKS 2 AND 4

SAMPLING LOCATION	TEST PARAMETER	SAMPLING METHOD	NUMBER OF RUNS	Hrs on-site No. of Staff
DAY 1 (Sunday) - Setup Equipment on Unit 2 for Compliance Test and Unit 1 for RATA				
DAY 2 (Monday) - Unit 2 Boiler Exit and FF Outlet Compliance and Unit 1 RATA				
Unit 2 Boiler Exit	Mercury	EPA Method 29	3	10 hrs 10 Staff
Unit 2 FF Outlet	Metals incl. Mercury	EPA Method 29	3	
	Particulate/PM_{10}	EPA Method $5/202_{wet}$	3	
	Opacity	COMS	3	
Unit 1	RATA	See Table below		
DAY 3 (Tuesday) - Unit 1 Boiler Exit and FF Outlet for Compliance and Unit 2 for RATA				
Unit 2	RATA	See Table below		
Unit 1 Boiler Exit	Mercury	EPA Method 29	1	10 hrs 10 Staff
	HCl	EPA Method 26A	3	
Unit 1 FF Outlet	Metals incl. Mercury	EPA Method 29	1	
	HCl and Ammonia	EPA Method 26A	3	
	PCDD/PCDF/PAH/PCB	EPA M 23	2	
DAY 4 (Wednesday) - Units 1 and 2 Boiler Exit and FF Outlet				
Unit 1 Boiler Exit	Mercury	EPA Method 29	3	10 hrs 10 Staff
Unit 1 FF Outlet	Metals incl. Mercury	EPA Method 29	3	
	Particulate/PM_{10}	EPA Method $5/202_{wet}$	3	
	Opacity	COMS	3	
	PCDD/PCDF/PAH/PCB	EPA M 23	1	
Unit 2 FF Outlet	HF and Cr^{+6}	EPA Method 13B/306	3	
	Sulfuric Acid	EPA Method 8	3	
	Non-Methane Hydrocarbons	EPA Method 25A	3	
Facility Ash Handling System	Fugitive Emissions	EPA Method 22	3	
DAY 5 (Thursday) - Units 1 and 2 Boiler Exit and FF Outlet				
Unit 2 Boiler Exit	HCl	EPA Method 26A	3	10 hrs 10 Staff
	Mercury	EPA Method 29	1	
Unit 2 FF Outlet	HCl and Ammonia	EPA Method 26A	3	
	Metals incl. Mercury	EPA Method 29	1	
Unit 1 FF Outlet	HF and Cr^{+6}	EPA Method 13B/306	3	
	Sulfuric Acid	EPA Method 8	3	
	Non-Methane Hydrocarbons	EPA Method 25A	3	
DAY 6 (Friday) - Contingency				

RATA Schedule

Day 1 (Monday) - Unit 1				
Unit 1 - Boiler Exit	Oxygen	M 3A and PS 3	9 - 12, ≥30 min	10 hours
	Sulfur Dioxide	M 6C and PS 2	9 - 12, ≥30 min	
Unit 1 - FF Outlet	Oxygen	M 3A and PS3	9 - 12, ≥30 min	
	Nitrogen Oxides & Sulfur Dioxide	M 6C, 7E and PS 2	9 - 12, ≥30 min	
	Carbon Monoxide	M 10 and PS 4A	9 - 12, ≥30 min	
Day 2 (Tuesday) - Unit 2				
Unit 2 - Boiler Exit	Oxygen	M 3A and PS 3	9 - 12, ≥30 min	10 hours
	Sulfur Dioxide	M 6C and PS 2	9 - 12, ≥30 min	
Unit 2 - FF Outlet	Oxygen	M 3A and PS3	9 - 12, ≥30 min	
	Nitrogen Oxides & Sulfur Dioxide	M 6C, 7E and PS 2	9 - 12, ≥30 min	
	Carbon Monoxide	M 10 and PS 4A	9 - 12, ≥30 min	

Pricing unchanged for January 1, 2027 - December 31, 2027

10/2/26

Pricing unchanged for January 1, 2027 - December 31, 2027

10/2/26

TABLE 5
BILLING INFORMATION FOR EMISSION TESTING - JANUARY, 2026

1. Hourly Time Charge Rates

Classification	Rate/Hour
Program Director (Marc Hamilton, Scott Steinsberger)	$115.00
Sr. Projects Managers (Lee Cecchi)	$100.00
Senior Project Managers	$90.00
Field Team Leaders	$75.00
Chemists	$75.00
Junior Professionals	$65.00
Senior Technician	$65.00
Technicians	$60.00

2. Time Charging

The above rates represent all of DEECO's direct salary costs, overhead, and profit. These rates are subject to periodic adjustment for merit and cost of living increases. The time charges for services performed will be the actual number of hours worked. Travel time shall be considered as work time. Time in excess of 8 hours per day will be billed at the same rate shown above. No extra rate for overtime is charged.

3. Travel, Subsistence and Other Direct Costs

Travel and subsistence expenses, materials and supplies, and out-of-pocket expenses are bill to the Client at cost. Meal per diem is $55.00 per day. Lodging costs are variable depending on location.

4. Charges for Automobile, Trucks & Vans

Vehicle Type	**Daily Charge**	**Mileage Charge**
Vans	$50.00	$1.00 per mile
Trucks/Trailers	$50.00	$1.00 per mile
CEM Trailer (less than 3 monitors)	$250.00	$1.00 per mile
CEM Trailer (each additional monitor)	$150.00	
Heat-traced Sample Line	$100.00	
Method 5-type Sample Trains	$100.00	
Modified Method 5-type Sample Trains	$150.00	
GC/FID/ECD/TCD/FPD	$250.00	
FTIR	$2,000	
Extra FTIR	$2,000	

Daily charges includes gasoline, maintenance, and insurance. Personal car mileage will be charged at the existing approved IRS rate. Travel days are charged at half of the daily charge for CEM Trailers.

Pricing unchanged for January 1, 2027 - December 31, 2027

Pricing unchanged for January 1, 2027 - December 31, 2027

Washington State Department of Revenue

Business Lookup

License Information:

New search Back to results

Entity name: DEECO INC

Business name: DEECO INC

Entity type: Corporation

UBI #: 603-237-573

Business ID: 001

Location ID: 0001

Location: Active

Location address: 3408 LAKE WOODARD DR
STE A
RALEIGH NC 27604-3858

Mailing address: 3404 LAKE WOODARD DR
RALEIGH NC 27604-3854

Excise tax and reseller permit status: Click here

Secretary of State information: Click here

Endorsements

Endorsements held at this location	License #	Count	Details	Status	Expiration date	First issuance date
Spokane General Business - Non-Resident	T12032625BUS			Active	Apr-30-2027	Oct-15-2012

Registered Trade Names

Registered trade names	Status	First issued
DEECO INC	Active	Apr-09-2020

The Business Lookup information is updated nightly. Search date and time: 10/22/2026 1:04:57 PM

Contact us

How are we doing?
Take our survey!

Don't see what you expected?
Check if your browser is supported

DEECINC-01 LWESTBROOK

CERTIFICATE OF LIABILITY INSURANCE

DATE (MM/DD/YYYY) 11/3/2026

THIS CERTIFICATE IS ISSUED AS A MATTER OF INFORMATION ONLY AND CONFERS NO RIGHTS UPON THE CERTIFICATE HOLDER. THIS CERTIFICATE DOES NOT AFFIRMATIVELY OR NEGATIVELY AMEND, EXTEND OR ALTER THE COVERAGE AFFORDED BY THE POLICIES BELOW. THIS CERTIFICATE OF INSURANCE DOES NOT CONSTITUTE A CONTRACT BETWEEN THE ISSUING INSURER(S), AUTHORIZED REPRESENTATIVE OR PRODUCER, AND THE CERTIFICATE HOLDER.

IMPORTANT: If the certificate holder is an ADDITIONAL INSURED, the policy(ies) must have ADDITIONAL INSURED provisions or be endorsed. If SUBROGATION IS WAIVED, subject to the terms and conditions of the policy, certain policies may require an endorsement. A statement on this certificate does not confer rights to the certificate holder in lieu of such endorsement(s).

PRODUCER	CONTACT NAME: Melissa Kadzielawski	
Rogers Insurance Agency PO Box 945 Apex, NC 27502	PHONE (A/C, No, Ext): (919) 362-8310	FAX (A/C, No): (919) 362-4101
	E-MAIL ADDRESS: melissa@rogersinc.net	

INSURED	INSURER(S) AFFORDING COVERAGE	NAIC #
Deeco, Inc. PO Box 4159 Cary, NC 27519	INSURER A : Ironshore Indemnity Inc.	23647
	INSURER B : Trumbull Insurance Company	27120
	INSURER C : Hartford Multiple Companies	14397
	INSURER D : Starstone National Insurance Company	25496
	INSURER E :	
	INSURER F :	

COVERAGES **CERTIFICATE NUMBER:** **REVISION NUMBER:**

THIS IS TO CERTIFY THAT THE POLICIES OF INSURANCE LISTED BELOW HAVE BEEN ISSUED TO THE INSURED NAMED ABOVE FOR THE POLICY PERIOD INDICATED. NOTWITHSTANDING ANY REQUIREMENT, TERM OR CONDITION OF ANY CONTRACT OR OTHER DOCUMENT WITH RESPECT TO WHICH THIS CERTIFICATE MAY BE ISSUED OR MAY PERTAIN, THE INSURANCE AFFORDED BY THE POLICIES DESCRIBED HEREIN IS SUBJECT TO ALL THE TERMS, EXCLUSIONS AND CONDITIONS OF SUCH POLICIES. LIMITS SHOWN MAY HAVE BEEN REDUCED BY PAID CLAIMS.

INSR LTR	TYPE OF INSURANCE	ADDL INSD	SUBR WVD	POLICY NUMBER	POLICY EFF (MM/DD/YYYY)	POLICY EXP (MM/DD/YYYY)	LIMITS	
A	X COMMERCIAL GENERAL LIABILITY						EACH OCCURRENCE	$ 2,000,000
	CLAIMS-MADE X OCCUR	X	X	IEPUW0032486201	3/10/2026	3/10/2027	DAMAGE TO RENTED PREMISES (Ea occurrence)	$ 500,000
							MED EXP (Any one person)	$ 20,000
							PERSONAL & ADV INJURY	$ 2,000,000
	GEN'L AGGREGATE LIMIT APPLIES PER:						GENERAL AGGREGATE	$ 2,000,000
	X POLICY PRO-JECT LOC						PRODUCTS - COMP/OP AGG	$ 2,000,000
	OTHER:						Pollution	$ 1,000,000
B	AUTOMOBILE LIABILITY						COMBINED SINGLE LIMIT (Ea accident)	$ 1,000,000
	X ANY AUTO	X	X	22UENBK0VHG	3/10/2026	3/10/2027	BODILY INJURY (Per person)	$
	OWNED AUTOS ONLY / SCHEDULED AUTOS						BODILY INJURY (Per accident)	$
	HIRED AUTOS ONLY / NON-OWNED AUTOS ONLY						PROPERTY DAMAGE (Per accident)	$
								$
A	X UMBRELLA LIAB X OCCUR						EACH OCCURRENCE	$ 8,000,000
	EXCESS LIAB CLAIMS-MADE		X	XSCUW0032486301	3/10/2026	3/10/2027	AGGREGATE	$ 8,000,000
	DED X RETENTION $ 10,000							$
C	WORKERS COMPENSATION AND EMPLOYERS' LIABILITY Y / N						X PER STATUTE OTH-ER	
	ANY PROPRIETOR/PARTNER/EXECUTIVE OFFICER/MEMBER EXCLUDED? (Mandatory in NH)	N / A	X	22WEAC9NK3	3/10/2026	3/10/2027	E.L. EACH ACCIDENT	$ 1,000,000
	If yes, describe under DESCRIPTION OF OPERATIONS below						E.L. DISEASE - EA EMPLOYEE	$ 1,000,000
							E.L. DISEASE - POLICY LIMIT	$ 1,000,000
D	Commercial Umbrella			P89792263AEM	3/10/2026	3/10/2027		2,000,000
A	Professional Liabili			IEPUW0032486201	3/10/2026	3/10/2027		1,000,000

DESCRIPTION OF OPERATIONS / LOCATIONS / VEHICLES (ACORD 101, Additional Remarks Schedule, may be attached if more space is required)

City of Spokane is included as Additional Insured on the General Liability and Automobile Liability policies for work performed by the named insured and where required by written contract. Coverage is provided on a primary and non contributory basis. Waiver of Subrogation applies in favor of Arkema Inc., its subsidiaries and affiliates, directors and officers, and employees on the General Liability, Automobile Liability, Excess/Umbrella Liability and Workers Compensation where required by written contract. Excess Liability is follow form.

CERTIFICATE HOLDER

City of Spokane
ATTN: Purchasing Division
4th Floor - City Hall
808 W Spokane Blvd
Spokane, WA 99201

CANCELLATION

SHOULD ANY OF THE ABOVE DESCRIBED POLICIES BE CANCELLED BEFORE THE EXPIRATION DATE THEREOF, NOTICE WILL BE DELIVERED IN ACCORDANCE WITH THE POLICY PROVISIONS.

AUTHORIZED REPRESENTATIVE

Ron G. Gonez

© 1988-2015 ACORD CORPORATION. All rights reserved.

The ACORD name and logo are registered marks of ACORD

Agenda Sheet for City Council:

Committee: PIES **Date:** 11/10/2026

Committee Agenda type: Reports, Contracts & Claims

Council Meeting Date: 12/02/2026

Date Rec'd	10/26/2026		
Clerk's File #	OPR 2022-0711		
Cross Ref #			
Project #			
Submitting Dept	WASTEWATER MANAGEMENT	**Bid #**	IRFP 4372-17
Contact Name/Phone	KYLE 4647	**Requisition #**	
Contact E-Mail	KARRINGTON@SPOKANECITY.ORG		
Agenda Item Type	Contract Item		
Council Sponsor(s)	KKLITZKE		
Sponsoring at Administrators Request	NO		
Lease? NO	**Grant Related?** NO	**Public Works?** NO	
Agenda Item Name	4320 RIVERSIDE PARK WATER RECLAMATION-CONTRACT-SAMPLE TESTING		

Agenda Wording

Contract renewal two of two with ALS Group USA Corp, Houston, TX for stormwater and wastewater sample testing. Term October 19,2026 to October 18,2027 for a cost not to exceed $79,934.00 plus any applicable taxes.

Summary (Background)

The City of Spokane, through its Riverside Park Water Reclamation Facility is required to seek analytical services for the High-Resolution Gas Chromatographic/Mass Spectrometric (HRGC/HRMS) analysis of stormwater and wastewater samples. This testing includes monitoring of polychlorinated biphenyls (PCBs),brominated flame retardants, and dioxin. These samples are collected to comply with Department of Ecology required testing of toxic pollutants of concern to the Spokane area.

What impacts would the proposal have on historically excluded communities?

N/A - Public Works services and projects are designed to serve all citizens and businesses. We strive to offer a consistent level of service to all, to distribute public investment throughout the community, and to respond to gaps in services identified in various City plans. We recognize the need to maintain affordability and predictability for utility customers. And we are committed to delivering work that is both financially and environmentally responsible. This item supports the operations of Public Works.

How will data be collected, analyzed, and reported concerning the effect of the program/policy by racial, ethnic, gender identity, national origin, income level, disability, sexual orientation, or other existing disparities?

N/A - This work is designed to manage costs and continue service delivery in support of all citizens and taxpayers and maintain compliance with regulatory requirements.

How will data be collected regarding the effectiveness of this program, policy, or product to ensure it is the right solution?

N/A - Public Works follows the City's established procurement and public works bidding regulations and policies to bring items forward, and then uses contract management best practices to ensure desired outcomes and regulatory compliance.

Describe how this proposal aligns with current City Policies, including the Comprehensive Plan, Sustainability Action Plan, Capital Improvement Program, Neighborhood Master Plans, Council Resolutions, and others?

This work is consistent with all City Policies and Procedures and is required to maintain compliance with regulatory requirements.

Council Subcommittee Review

PIES

Fiscal Impact	
Approved in Current Year Budget?	YES
Total Cost	**$** 79,934.00
Current Year Cost	**$** 79,934.00
Subsequent Year(s) Cost	**$** 0

Narrative

Amount		**Budget Account**
Expense	**$** 79,934.00	**#** 4320.43260.35148.54950
Select	**$**	**#**
Select	**$**	**#**
Select	**$**	**#**
Select	**$**	**#**
Select	**$**	**#**

Funding Source	Recurring
Funding Source Type	Program Revenue

Is this funding source sustainable for future years, months, etc?

Expense Occurrence	Recurring

Other budget impacts (revenue generating, match requirements, etc.)

Approvals		**Additional Approvals**	
Dept Head	GENNETT, RAYLENE	**PURCHASING**	PRINCE, THEA
Division Director	AVERYT, CHRIS		
Accounting Manager	ALBIN-MOORE, ANGELA		
Legal	FAIRBORN, KATHERINE		
For the Mayor	PICCOLO, MIKE		

Distribution List	
Mark Hoots mark.hoots@alsglobal.com	hbarnhart@spokanecity.org
kkeck@spokanecity.org	rpwrfaccounting@spokanecity.org
Tax & Licenses	tlester@spokanecity.org

City Clerk's No. OPR 2022-0711

City of Spokane

CONTRACT RENEWAL 2 of 2 and AMENDMENT

Title: **HRGC/HRMS ANALYSIS OF ENVIRONMENTAL SAMPLES**

This Contract Renewal and Amendment is made and entered into by and between the **CITY OF SPOKANE** as ("City"), a Washington municipal corporation, and **ALS GROUP USA CORP.,** whose 10450 Stancliff Road, Houston, Texas 77099 as ("Company"), individually hereafter referenced as a "Party", and together as the "Parties".

WHEREAS, the Parties entered into a Contract wherein the Company shall perform HRGC/HRMS Analysis of Environmental Samples; and

WHEREAS, the initial contract provided for two (1) additional one-year renewals with this being the second of those renewals; and

WHEREAS, professional liability insurance is required due to a change to insurance requirements by the City of Spokane.

NOW, THEREFORE, in consideration of these terms, the parties mutually agree as follows:

1. CONTRACT DOCUMENTS.
The Contract, dated October 18, 2022 and October 19, 2022, any previous amendments, addendums and / or extensions / renewals thereto, are incorporated by reference into this document as though written in full and shall remain in full force and effect except as provided herein.

2. EFFECTIVE DATES.
This Contract Renewal / Amendment shall become effective October 19, 2026, and end October 18, 2027.

3. COMPENSATION.
The City shall pay a maximum additional cost in the amount of **SEVENTY-NINE THOUSAND NINE HUNDRED THIRTY-FOUR AND 00/100 DOLLARS ($79,934.00)**, excluding taxes, for everything furnished and done under this Contract Renewal. This is the maximum amount to be paid under this Renewal / Amendment, and shall not be exceeded without the prior written authorization of the City, memorialized with the same formality as the original Contract and this Renewal / Amendment document.

4. AMENDMENT.

The original Contract is revised to include the following:

> **Professional Liability Insurance with a combined single limit of not less than $1,000,000 each claim, incident or occurrence. This is to cover damages caused by the error, omission, or negligent acts related to the professional services to be provided under this Agreement. The coverage must remain in effect for at least two (2) years after the Agreement is completed.**

5. DEBARMENT AND SUSPENSION.
The Contractor has provided its certification that it is in compliance with and shall not contract with individuals or organizations which are debarred, suspended, or otherwise excluded from or ineligible from participation in Federal Assistance Programs under Executive Order 12549 and "Debarment and Suspension", codified at 29 CFR part 98.

IN WITNESS WHEREOF, in consideration of the terms, conditions and covenants contained, or attached and incorporated and made a part, the parties have executed this Contract Renewal / Amendment by having legally-binding representatives affix their signatures below.

ALS GROUP USA CORP.	**CITY OF SPOKANE**
By_____	By_____
Signature Date	Signature Date
_____	_____
Type or Print Name	Type or Print Name
_____	_____
Title	Title
Attest:	Approved as to form:
_____	_____
City Clerk	Assistant City Attorney

Attachments that are part of this Agreement:

Exhibit A – Certification regarding Debarment
Exhibit B – Price Extension details

26-283

EXHIBIT A

CERTIFICATION REGARDING DEBARMENT, SUSPENSION, INELIGIBILITY AND VOLUNTARY EXCLUSION

1. The undersigned (i.e., signatory for the Subrecipient / Contractor / Consultant) certifies, to the best of its knowledge and belief, that it and its principals:

   a. Are not presently debarred, suspended, proposed for debarment, declared ineligible, or voluntarily excluded from covered transactions by any federal department or agency;
   b. Have not within a three-year period preceding this contract been convicted or had a civil judgment rendered against them for commission of fraud or a criminal offense in connection with obtaining, attempting to obtain, or performing a public (federal, state, or local) transaction or contract under a public transaction; violation of federal or state antitrust statutes or commission of embezzlement, theft, forgery, bribery, falsification or destruction of records, making false statements, tax evasion, receiving stolen property, making false claims, or obstruction of justice;
   c. Are not presently indicted or otherwise criminally or civilly charged by a government entity (federal, state, or local) with commission of any of the offenses enumerated in paragraph (1)(b) of this certification; and,
   d. Have not within a three-year period preceding this contract had one or more public transactions (federal, state, or local) terminated for cause or default.

2. The undersigned agrees by signing this contract that it shall not knowingly enter into any lower tier covered transaction with a person who is debarred, suspended, declared ineligible, or voluntarily excluded from participation in this covered transaction.

3. The undersigned further agrees by signing this contract that it will include the following clause, without modification, in all lower tier covered transactions and in all solicitations for lower tier covered transactions:

   Certification Regarding Debarment, Suspension, Ineligibility and Voluntary Exclusion – Lower Tier Covered Transactions

   1. The lower tier contractor certified, by signing this contract that neither it nor its principals is presently debarred, suspended, proposed for debarment, declared ineligible, or voluntarily excluded from participation in this transaction by any federal department or agency.

   2. Where the lower tier contractor is unable to certify to any of the statements in this contract, such contractor shall attach an explanation to this contract.

4. I understand that a false statement of this certification may be grounds for termination of the contract.

Name of Subrecipient / Contractor / Consultant (Type or Print)	Program Title (Type or Print)
Name of Certifying Official (Type or Print) Title of Certifying Official (Type or Print)	Signature Date (Type or Print)

EXHIBIT B

Heather,

The updated pricing for the contract renewal in 2026 with ALS Global (OPR 2022-0711) is a total annual cost of $79,934. This is based on a 3% increase for each of the three tests in the contract and the total estimated maximum number of samples per year for each test. Additional details and unit cost breakdowns are shown in the table below.

Analyte	Matrix	# of samples per year	ALS Unit Cost 2026	ALS Total Cost
PCBs	Water	62	$ 644.00	$ 39,928.00
PCBs	Solids	3	$ 644.00	$ 1,932.00
PBDEs	Water	39	$ 644.00	$ 25,116.00
PBDEs	Solids	3	$ 644.00	$ 1,932.00
TCDD	Water	34	$ 298.00	$ 10,132.00
TCDD	Solids	3	$ 298.00	$ 894.00
		Annual Cost		$ 79,934.00

Thanks,

Jeff Donovan

Environmental Program Manager

STATE OF WASHINGTON

BUSINESS LICENSE

Issue Date: Oct 15, 2026

Profit Corporation

Unified Business ID #: 602998939
Business ID #: 001
Location: 0002
Expires: Jul 31, 2027

ALS GROUP USA, CORP.
1317 S 13TH AVE
KELSO WA 98626-2845

STATE ENDORSEMENTS:

UNEMPLOYMENT INSURANCE - ACTIVE

INDUSTRIAL INSURANCE - ACTIVE

TAX REGISTRATION - ACTIVE

CITY/COUNTY ENDORSEMENTS:

KELSO GENERAL BUSINESS #B010020 - ACTIVE

SPOKANE GENERAL BUSINESS - NON-RESIDENT - ACTIVE

LICENSING RESTRICTIONS:

Not licensed to hire minors without a Minor Work Permit.

REGISTERED TRADE NAMES:

ALS ENVIRONMENTAL

This document lists the registrations, endorsements, and licenses authorized for the business named above. By accepting this document, the licensee certifies the information on the application was complete, true, and accurate to the best of his or her knowledge, and that business will be conducted in compliance with all applicable Washington state, county, and city regulations.

John Ryser
Director, Department of Revenue

STATE OF WASHINGTON

UBI: 602998939 001 0002

Expires: Jul 31, 2027

ALS GROUP USA, CORP.
1317 S 13TH AVE
KELSO WA 98626-2845

UNEMPLOYMENT INSURANCE
INDUSTRIAL INSURANCE
TAX REGISTRATION
KELSO GENERAL BUSINESS
#B010020 - ACTIVE
SPOKANE GENERAL BUSINESS -
NON-RESIDENT - ACTIVE

FOLD HERE

FOLD HERE

John Ryser
Director, Department of Revenue

IMPORTANT!

PLEASE READ THE FOLLOWING INFORMATION CAREFULLY BEFORE POSTING THIS LICENSE

General Information

Post this Business License in a visible location at your place of business. If you were issued a Business License previously, destroy the old one and post this one in its place. You can update business information, such as your location, mailing address, or phone number, and close your business online using My DOR. For help making these changes, visit dor.wa.gov/MyDORHelp. It is important to maintain users who have access to your business in My DOR. To add or remove users, visit dor.wa.gov/ManageAccessMyDOR.

Endorsements

Endorsements that have been approved will show as “Active”. Endorsements that have not yet been approved will show as “Pending” and will not have an expiration date as they require approval from the regulatory entity. Endorsements with an expiration date must be renewed by that date to avoid late fees. If there is no expiration date, the endorsements remain active as long as you continue required reporting. Tax Registration, Unemployment Insurance, and Industrial Insurance endorsements require you to submit periodic reports. Each agency will send you the necessary reporting forms and instructions.

Contact Us:
Email BLS@dor.wa.gov
Telephone 360-705-6705

For assistance or to request this document in an alternate format, visit http://business.wa.gov/BLS or call (360) 705-6705. Teletype (TTY) users may use the Washington Relay Service by calling 711.

Ref. No. 320011558006 AMENDED

CERTIFICATE OF INSURANCE

Aon Reed Stenhouse Inc.
1067 West Cordova, Suite 1700
Vancouver BC V6C 1C7
tel 604-688-4442 *fax* 604-682-4026

Amending Certificate No. : 320011535969

Re: Evidence of Insurance
Project Name and Number: OPR 2022-0711

City of Spokane
Attention : Purchasing
4th Floor, City Hall
808 W. Spokane Falls Blvd.
Spokane, WA 99201-3316
USA

Insurance as described herein has been arranged on behalf of the Insured named herein under the following policy(ies) and as more fully described by the terms, conditions, exclusions and provisions contained in the said policy(ies) and any endorsements attached thereto.

Insured

ALS Canada Ltd
2103 Dollarton Highway
North Vancouver, BC V7H 0A7

Coverage

Commercial General Liability	**Insurer**	XL Specialty Insurance Company	
	Policy #	CA00001985LI26A	
	Effective	30-Sep-2026	**Expiry** 30-Sep-2027
	Limits of Liability	Bodily Injury & Property Damage, Each Occurrence $2,000,000 Policy may be subject to a general aggregate and other aggregates where applicable	
Automobile Owners Form	**Insurer**	Intact Insurance Company	
	Policy #	RF7043643	
	Effective	30-Sep-2026	**Expiry** 30-Sep-2027
	Limits of Liability	Third Party Liability - S.P.F.1 $2,000,000	

Additional Insured

Only with respect to the above and arising out of the Named Insured's operations are the following name(s) added to the policy as Additional Insured(s). The policy limits are not increased by the addition of such Additional Insured(s) and remain as stated in this Certificate.

City of Spokane, its officers and employees where required by written contract or written agreement with respect to Commercial General Liability

Cancellation / Termination

The Insurer will endeavour to provide THIRTY (30) days written notice of cancellation/termination to the addressee except that statutory or policy conditions (whichever prevails) will apply for non-payment of premium.

THE POLICY CONTAINS A CLAUSE THAT MAY LIMIT THE AMOUNT PAYABLE
OR, IN THE CASE OF AUTOMOBILE INSURANCE,
THE POLICY CONTAINS A PARTIAL PAYMENT OF LOSS CLAUSE
THIS CERTIFICATE DOES NOT AMEND, EXTEND, OR ALTER THE COVERAGE AFFORDED BY THE POLICY

AON

Ref. No. 320011558006 **AMENDED**

CERTIFICATE OF INSURANCE

THIS CERTIFICATE CONSTITUTES A STATEMENT OF THE FACTS AS OF THE DATE OF ISSUANCE AND ARE SO REPRESENTED AND WARRANTED ONLY TO City of Spokane. OTHER PERSONS RELYING ON THIS CERTIFICATE DO SO AT THEIR OWN RISK.

Dated : 09-October-2026

Aon Reed Stenhouse Inc

THE POLICY CONTAINS A CLAUSE THAT MAY LIMIT THE AMOUNT PAYABLE
OR, IN THE CASE OF AUTOMOBILE INSURANCE,
THE POLICY CONTAINS A PARTIAL PAYMENT OF LOSS CLAUSE
THIS CERTIFICATE DOES NOT AMEND, EXTEND, OR ALTER THE COVERAGE AFFORDED BY THE POLICY

AON

Agenda Sheet for City Council:

Committee: PIES **Date:** 11/10/2026

Committee Agenda type: Reports, Contracts & Claims

Council Meeting Date: 12/02/2026

Date Rec'd	11/3/2026		
Clerk's File #	OPR 2022-0900		
Cross Ref #			
Project #			
Submitting Dept	SOLID WASTE DISPOSAL	**Bid #**	RFQ 5760-22
Contact Name/Phone	TRACE 509-625-6524	**Requisition #**	VB 301413
Contact E-Mail	TBRADBURN@SPOKANECITY.ORG		
Agenda Item Type	Purchase w/o Contract		
Council Sponsor(s)	KKLITZKE		
Sponsoring at Administrators Request	NO		
Lease? NO	**Grant Related?** NO	**Public Works?** NO	
Agenda Item Name	VALUE BLANKET RENEWAL FOR THE PURCHASE OF VARIABLE FREQUENCY		

Agenda Wording

Value blanket renewal 4 of 4 with Dykman, Inc. (Spokane Valley, WA) for the as-needed purchase of variable frequency drives (VFD's) for use at the Waste to Energy Facility from 12/15/2026-12/14/2027 and a total cost not to exceed $80,000.00, plus tax.

Summary (Background)

The as-needed purchase of these Variable Frequency Drives (VFD's) will support replacement efforts for the boiler induction draft fans, as well as the primary and secondary air fans at the Waste to Energy Facility. In 2022, based on their response to RFQ 5760-22, Dykman, Inc. was awarded a one-year value blanket with the option of four additional one-year renewals. This will be the final renewal. Pricing has been adjusted and includes extra charges for tariffs. Pricing can only be held in three month increments.

What impacts would the proposal have on historically excluded communities?

No impacts are identified. Public works services and projects are designed to serve all citizens and businesses. We strive to offer a consistent level of service to all, to distribute public investment throughout the community and to respond to gaps in services identified in various City plans. We recognize the need to maintain affordability and predictability for all solid waste customers and are committed to being financially and environmentally responsible.

How will data be collected, analyzed, and reported concerning the effect of the program/policy by racial, ethnic, gender identity, national origin, income level, disability, sexual orientation, or other existing disparities?

This routine purchase is designed to manage costs and continue to provide solid waste services in support of all ratepayers. It will not impact race, gender identity, national origin, income level, disability, sexual orientation or other existing disparities.

How will data be collected regarding the effectiveness of this program, policy, or product to ensure it is the right solution?

Public Works follows the City's established procurement and public works bidding regulations and policies to bring items forward and then uses contract management best practices to ensure desired outcomes and regulatory compliance.

Describe how this proposal aligns with current City Policies, including the Comprehensive Plan, Sustainability Action Plan, Capital Improvement Program, Neighborhood Master Plans, Council Resolutions, and others?

This agreement is consistent with annual budget strategies to provide funding needed for capital improvement projects and to provide continued services in support of all ratepayers.

Council Subcommittee Review

n/a

Fiscal Impact

Approved in Current Year Budget?	YES
Total Cost	$ 80,000.00
Current Year Cost	$
Subsequent Year(s) Cost	$

Narrative

This is a repair and maintenance supply expense that is planned for annually in the Solid Waste Disposal budget and funds are only utilized as-needed.

Amount		Budget Account
Expense	$ 80,000.00	# 4490-44100-37148-53210-34002
Select	$	#
Select	$	#
Select	$	#
Select	$	#
Select	$	#

Funding Source	Recurring
Funding Source Type	Program Revenue

Is this funding source sustainable for future years, months, etc?

Yes

Expense Occurrence	Recurring

Other budget impacts (revenue generating, match requirements, etc.)

Approvals		Additional Approvals	
Dept Head	BRADBURN, TRACE	PURCHASING	PRINCE, THEA
Division Director	FEIST, MARLENE		
Accounting Manager	ALBIN-MOORE, ANGELA		
Legal	FAIRBORN, KATHERINE		
For the Mayor	PICCOLO, MIKE		

Distribution List	
	mdorgan@spokanecity.org
jsalstrom@spokanecity.org	tprince@spokanecity.org
rrinderle@spokanecity.org	

	VB-301413-000	VB-301413-001	VB-301413-002	VB-301413-003	VB-301413-004
	Base Year	1st Option Year	2nd Option Year	3rd Option Year	4th Option Year
	Valid Through 12-15-2022 Through 12-14-2023	Valid Through 12-15-2023 Through 12-14-2024	Valid Through 12-15-2024 Through 12-14-2025	Valid Through 12-15-2025 Through 12-14-2026	Valid Through 12-15-2026 Through 12-14-2027
	Unit Price	Unit Price	Unit Price	Unit Price Reflects 44% off List (7% Tariff Surcharge Denoted by *)	**Unit Price reflects 43.9% off list (Yaskawa increased list price but eliminaed 7% tariff. It's about a 4% increase over last option year)**
New Yaskawa Variable Frequency Drives and Kits – As Needed (**With Percentage Off List for VFD's Not Listed**) – As Needed (RFQ 5760-22) Standard Ground Delivery. Supplier is responsible for Freight/Shipping Cost to be incurred for any orders shipped via standard ground delivery. The majority of orders will standard ground delivery. Expedited Delivery The City agrees to pay for expedited freight cost incurred for any order that City requests be expedited. The City reserves the right to request copies of freight bills to support expedited freight charges.	PRICING ADJUSTMENTS: Pricing shall be firm for a period of 3 months. After initial three-month period, pricing adjustments would be considered on a three-month basis, or more often, based on Supplier providing back up documentation. Back up documentation from manufacturer and/or other sources must be included to justify request. The United States published indices such as the Producer Price Index (PPI), or other government data, may be referenced to help substantiate the Vendor's documentation.	PRICING ADJUSTMENTS: Pricing shall be firm for a period of 3 months. After initial three-month period, pricing adjustments would be considered on a three-month basis, or more often, based on Supplier providing back up documentation. Back up documentation from manufacturer and/or other sources must be included to justify request. The United States published indices such as the Producer Price Index (PPI), or other government data, may be referenced to help substantiate the Vendor's documentation.	PRICING ADJUSTMENTS: Pricing shall be firm for a period of 3 months. After initial three-month period, pricing adjustments would be considered on a three-month basis, or more often, based on Supplier providing back up documentation. Back up documentation from manufacturer and/or other sources must be included to justify request. The United States published indices such as the Producer Price Index (PPI), or other government data, may be referenced to help substantiate the Vendor's documentation.	**PRICING ADJUSTMENTS: Pricing shall be firm for a period of 3 months. After initial three-month period, pricing adjustments would be considered on a three-month basis, or more often, based on Supplier providing back up documentation.** Back up documentation from manufacturer and/or other sources must be included to justify request. The United States published indices such as the Producer Price Index (PPI), or other government data, may be referenced to help substantiate the Vendor's documentation.	**PRICING ADJUSTMENTS: Pricing shall be firm for a period of 3 months. After initial three-month period, pricing adjustments would be considered on a three-month basis, or more often, based on Supplier providing back up documentation.** Back up documentation from manufacturer and/or other sources must be included to justify request. The United States published indices such as the Producer Price Index (PPI), or other government data, may be referenced to help substantiate the Vendor's documentation.
FP65U4302ABA FP605 AC Drive 480 V., 250 HP, 302 A., IP20/Protected Chassis Enclosure Tag: ACC FAN VFD				$12,165.44 + Tariff $851.58	$13,527.95
900-192-121-009 FP605, End Cap Kit, NEMA 1 Drive Model Number=FP65U4302ABA, Voltage=480 Tag: ACC FAN VFD NEMA 1 KIT				$323.68 + Tariff $22.66	$360.16
FP65U4414ABA FP605 AC Drive 480 V., 350 HP, 414 A., IP20/Protected Chassis Enclosure Tag: PRIMARY/SECONDARY FANS, FEEDWATER BOILER PUMP				$15,709.68 +Tariff $1,099.68	17,468.98
FP65U4720ABA FP605 AC Drive 480 V., 600 HP, 720 A., IP20/Protected Chassis Enclosure Tag: ID FAN				$31,522.96 + Tariff $2,206.61	$35,053.52
JOHB-SMP3-MA Multi-Protocol Ethernet Multi-Protocol Ethernet (EtherNet/IP, Modbus TCP/IP, PROFINET, or EtherCAT) Function Tag: ETHERNET IP COMMUNICATON FOR ALL YASKAWA RATINGS				$290.08 +Tariff $20.31	$322.58
Bid Section Pricing 8.1. Percentage discount off list to be provided by Supplier for additional Yaskawa Variable Frequency Drives and Kits not listed in the Pricing tab but may be realized are needed at a later point in time. Percentage Discount Off Supplier's List Cost. Discount percentages offered will remain unchanged throughout the life of the contract and any renewals.	44%	44%	44%	44%	44%

Dykman	**Base Year Pricing was per 'Dykman response to RFQ 5760-22.**	NAME	Cody Dykman
Mr. Cody Brown, Sales Manager		SIGNATURE	Cody Dykman
Phone 509 536 8787			
cbrown@dykman.com		DATE	10/6/2026

Washington State Department of Revenue

Business Lookup

License Information:

New search Back to results

Entity name: DYKMAN ELECTRICAL INC

Business name: DYKMAN ELECTRICAL INC

Entity type: Profit Corporation

UBI #: 602-036-307

Business ID: 001

Location ID: 0002

Location: Active

Location address: 1507 N THIERMAN RD
SPOKANE VALLEY WA 99212-1178

Mailing address: 2323 FEDERAL WAY
BOISE ID 83705-4462

Excise tax and reseller permit status: Click here

Secretary of State information: Click here

Endorsements

Endorsements held at this location	License #	Count	Details	Status	Expiration date	First issuance date
Spokane General Business - Non-Resident				Active	Apr-30-2027	Mar-24-2017
Spokane Valley General Business	00622			Active	Apr-30-2027	Feb-04-2004

Owners and officers on file with the Department of Revenue

Owners and officers	Title
DYKMAN, ALLEN	
DYKMAN, ALLISON	
DYKMAN, BRYAN	
DYKMAN, DIXIE	
GEORGE, DAVID	
MCKENZIE, JARRED	

Registered Trade Names

Registered trade names	Status	First issued
DYKMAN ELECTRICAL, INC	Active	Mar-27-2018

View Additional Locations

The Business Lookup information is updated nightly. Search date and time: 11/4/2026 10:28:34 AM

Contact us

How are we doing?
Take our survey!

Don't see what you expected?
Check if your browser is supported

Agenda Sheet for City Council:

Committee: PIES **Date:** 11/10/2026

Committee Agenda type: Reports, Contracts & Claims

Council Meeting Date: 12/02/2026

Date Rec'd	11/3/2026		
Clerk's File #	OPR 2022-0901		
Cross Ref #			
Project #			
Submitting Dept	SOLID WASTE DISPOSAL	**Bid #**	ITB 5754-22
Contact Name/Phone	TRACE 509-625-6524	**Requisition #**	VB 301414
Contact E-Mail	TBRADBURN@SPOKANECITY.ORG		
Agenda Item Type	Purchase w/o Contract		
Council Sponsor(s)	KKLITZKE		
Sponsoring at Administrators Request	NO		
Lease? NO	**Grant Related?** NO	**Public Works?** NO	
Agenda Item Name	VALUE BLANKET RENEWAL FOR THE PURCHASE OF SUPERHEATER TUBES		

Agenda Wording

Value blanket renewal 4 of 4 with Helfrich Brothers Boiler Works, Inc. (Lawrence, MA) for the purchase of superheater tube panels for use at the Waste to Energy Facility from 12/15/2026 - 12/14/2026 and a total cost not to exceed $3,750,000.00, plus tax.

Summary (Background)

The superheater section of a boiler increases the temperature of steam and dries it out; increasing the energy realized in a turbine generator. High temps and corrosion cause wear on the boiler tubes, requiring periodic replacement. Superheater tube replacement is regularly scheduled in the departments Capital Improvement Plan. In 2022, Helfrich Brothers was awarded a one year value blanket, with the possibility of four (4) additional one-year renewals, based on their response to ITB 5754-22, for the fabrication of these superheater tubes. This will be the final renewal. Pricing is increasing by approximately 6% for this renewal due to increases in material and freight costs.

What impacts would the proposal have on historically excluded communities?

No impacts are identified. Public works services and projects are designed to serve all citizens and businesses. We strive to offer a consistent level of service to all, to distribute public investment throughout the community and to respond to gaps in services identified in various City plans. We recognize the need to maintain affordability and predictability for all solid waste customers and are committed to being financially and environmentally responsible.

How will data be collected, analyzed, and reported concerning the effect of the program/policy by racial, ethnic, gender identity, national origin, income level, disability, sexual orientation, or other existing disparities?

This routine purchase is designed to manage costs and continue to provide solid waste services in support of all ratepayers. It will not impact race, gender identity, national origin, income level, disability, sexual orientation or other existing disparities.

How will data be collected regarding the effectiveness of this program, policy, or product to ensure it is the right solution?

Public Works follows the City's established procurement and public works bidding regulations and policies to bring items forward and then uses contract management best practices to ensure desired outcomes and regulatory compliance.

Describe how this proposal aligns with current City Policies, including the Comprehensive Plan, Sustainability Action Plan, Capital Improvement Program, Neighborhood Master Plans, Council Resolutions, and others?

This work is consistent with annual budget strategies to limit costs and approved projects in the 6-year CIP.

Council Subcommittee Review

n/a

Fiscal Impact

Approved in Current Year Budget?	YES
Total Cost	$ 3,750,000.00
Current Year Cost	$
Subsequent Year(s) Cost	$

Narrative

This is a capital repair and maintenance supply expense that is planned for periodically in the solid Waste Disposal Capital Plan and budget

Amount		Budget Account
Expense	$ 1,875,000.00	# 4490-44900-37145-54803-19047
Expense	$ 1,875,000.00	# 4490-44900-37145-54803-19048
Select	$	#
Select	$	#
Select	$	#
Select	$	#

Funding Source	Recurring
Funding Source Type	Program Revenue

Is this funding source sustainable for future years, months, etc?

Yes

Expense Occurrence	Recurring

Other budget impacts (revenue generating, match requirements, etc.)

Approvals		Additional Approvals	
Dept Head	BRADBURN, TRACE	PURCHASING	PRINCE, THEA
Division Director	FEIST, MARLENE		
Accounting Manager	ALBIN-MOORE, ANGELA		
Legal	FAIRBORN, KATHERINE		
For the Mayor	PICCOLO, MIKE		

Distribution List	
	mdorgan@spokanecity.org
jsalstrom@spokanecity.org	tprince@spokanecity.org
rrinderle@spokanecity.org	

Value Blanket VB-301414		Base Year VB-301414-000 Valid from 12/15/2022 Through 14/14/2023 Unit Price Each	1st Opt Year VB-301414-001 Valid from 12/15/2023 Through 12/14/2024 Unit Price Each	2nd Opt Year VB-301414-002 Valid from 12/15/2024 Through 12/14/2025 Unit Price Each	3rd Opt Year VB-301414-003 Valid from 12/15/2025 Through 12/14/2026 Unit Price Each	4th Opt Year VB-301414-004 Valid from 12/15/2026 Through 12/14/2027 Unit Price Each
Item	Qty 1 Lot More Or Less	All Ground FREIGHT CHARGES are the responsibility of the winning supplier per bid ITB 5754-23	All Ground FREIGHT CHARGES are the responsibility of the winning supplier per bid ITB 5754-23	All Ground FREIGHT CHARGES are the responsibility of the winning supplier per bid ITB 5754-23	All Ground FREIGHT CHARGES are the responsibility of the winning supplier per bid ITB 5754-23	All Ground FREIGHT CHARGES are the responsibility of the winning supplier per bid ITB 5754-23
Fabrication of thirty-two (32) 20-tube wide secondary Superheater pendants fitted with 310 SS rapper bars referenced in item 3 below to be delivered on or before October 30, 2023. The tube material will consist of 2" OD x .240 mwt. SA-213-TP310H on the first four (4) rows and 2 ½" OD x .240 mwt. SA-213-TP310H on the next sixteen (16) rows. On row# 4, just above the middle slip spacer, a swaged stainless steel tube from 2'' to 2 ½" will be installed. A total of (19) 310 SS slip spacers will be installed in the middle section of each Superheater pendant and (10) 310 SS slip spacers will be installed in the upper section. The slips spacers will be the " D' ' type and cast from SA-351 CK 30 stainless steel. Both terminal tubes will have SA 210A1 "safe ends" installed to match existing. Comprising one lot. Quantity 1 Lot, More or less. All FREIGHT CHARGES are the responsibility of the winning supplier. Unit Pricing Should Not Include Tax.	1	$1,281,390.00	$1,383,910.00	$1,488,000.00	$1,600,000.00	$1,700,000.00
Fabrication of thirty-four (34) 20-tube wide primary Superheater pendants fitted with 310 SS rapper bars referenced in item 4 below to be delivered during an agreed time in the duration of the contract. The tube material will consist of 2" OD x .240 mwt. SA-213-TP310H on the first four (4) rows and 2 ½" OD x .240 mwt. SA-213-TP310H on the next sixteen (16) rows. On row# 4, just above the middle slip spacer, a swaged stainless steel tube from 2" to 2 ½" will be installed. A total of (19) 310 SS slip spacers will be installed in the middle section of each Superheater pendant and (10) 310 SS slip spacers will be installed in the upper section. The slips spacers will be the " D' ' type and cast from SA-351 CK 30 stainless steel. Both terminal tubes will have SA 210A1 "safe ends" installed to match existing. All FREIGHT CHARGES are the responsibility of the winning supplier. Unit Pricing Should Not Include Tax.	1	$1,361,475.00	$1,470,395.00	$1,581,000.00	$1,700,000.00	$1,800,000.00
Fabrication of thirty-four (32) sets of 310 SS rapper bars including rapper caps and SS hardware for the secondary pendants to be delivered during an agreed time in the duration of the contract. The rapper bars will be machined to fit vs. a casting type and shop installed. Winning bidder will provide a complete set of rapper bar drawings for the project. Comprising one lot. Quantity 1 Lot, More or less. All FREIGHT CHARGES are the responsibility of the winning supplier. Unit Pricing Should Not Include Tax.	1	$159,845.00	$172,635.00	$185,600.00	$208,000.00	$210,000.00
Fabrication of thirty-four (34) sets of 310 SS rapper bars including rapper caps and SS hardware for the primary pendants to be delivered during an agreed time in the duration of the contract. The rapper bars will be machined to fit vs. a casting type and shop installed. Winning bidder will provide a complete set of rapper bar drawings for the project. Comprising one lot. Quantity 1 Lot, More or less. Unit Pricing Should Not Include Tax.	1	$169,640.00	$183,215.00	$197,200.00	$221,000.00	$225,000.00
Materials, engineering and fabrication of two (2) complete sets of Penthouse Casing and Seal Plates per the provided drawings. Comprising one lot. Quantity 1 Lot, More or less. All FREIGHT CHARGES are the responsibility of the winning supplier. Unit Pricing Should Not Include Tax.	1	$38,000.00	$41,040.00	$44,000.00	$50,000.00	$55,000.00

Option Supply and install I OGA 31OSS 2 ½" 180 degree tube shields, applied to row #20 on the upper third of the pendant and the middle sections. clips will be installed in (3) location. A total of 16 LF of coverage per pendant will be included in this option. Comprising one lot. Quantity 1 Lot, More or less. All FREIGHT CHARGES are the responsibility of the winning supplier. Unit Pricing Should Not Include Tax.	1	$22,000.00	$23,760.00	$25,000.00	$27,000.00	$30,000.00
Option Supply and install I OGA 31OSS 2" 180 degree tube shields, applied to row# 1 from just below the top bend the complete length of the pendant and around the lower tube bend and up 1 ft. on tube #4. Tube shields shall have clips installed in (3) location. A total of 35 LF of coverage per pendant will be included in the option. Shields shall have clips will be installed in (3) location. A total of 16 LF of coverage per pendant will be included in this option. Comprising one lot. Quantity 1 Lot, More or less. All FREIGHT CHARGES are the responsibility of the winning supplier. All FREIGHT CHARGES are the responsibility of the winning supplier. Unit Pricing Should Not Include Tax.	1	$25,000.00	$27,000.00	$29,000.00	$34,000.00	$37,000.00
Percentage discount off list to be provided by Supplier for additional tube related items not listed in the Pricing tab but may be realized are needed at a later point in time. Enter Percentage Discount Off Supplier's List Cost.		5% Discount	5% Discount	5% Discount	5% Discount	5% Discount
Should Supplier not provide percentage off discount for additional tube related items not listed in the Pricing tab but may be realized are needed at a later point in time, Supplier shall provide Percentage Markup Above Supplier's Cost. Enter Percentage Markup Above Supplier cost here.		25% Markup	25% Markup	25% Markup	25% Markup	25% Markup
Vendor to provide discount percentage(s) and minimum quantity needed if any discounts apply based on order volume.		Any additional quantities over the original requirements HBBW will offer an 5% discount on the list pricing. This assume normal	Any additional quantities over the original requirements HBBW will offer an 5% discount on the list pricing. This assume normal	Any additional quantities over the original requirements HBBW will offer an 5% discount on the list pricing. This assume normal	Any additional quantities over the original requirements HBBW will offer an 5% discount on the list pricing. This assume normal	Any additional quantities over the original requirements HBBW will offer an 5% discount on the list pricing. This assume normal
Percentage discount off list to be provided by vendor for additional tube related items not listed in the Pricing tab but may be realized are needed at a later point in time.		HBBW will offer an 5% discount on the list pricing. This assume normal shipping	HBBW will offer an 5% discount on the list pricing. This assume normal shipping	HBBW will offer an 5% discount on the list pricing. This assume normal shipping	HBBW will offer an 5% discount on the list pricing. This assume normal shipping	HBBW will offer an 5% discount on the list pricing. This assume normal shipping
O: 978-683-7244 | C: 781-636-8644 Helfrich Brothers Boiler Works, Inc.		**Base Year Pricing Was Per HBBW's Response to ITB 5754-23**			**Name**	RAMI KATTAR
					Signature	*Rami Kattar*
					Date	09/28/2026

Washington State Department of Revenue

Business Lookup

License Information:

New search Back to results

Entity name: HELFRICH BROS BOILER WORKS, INC.

Business name: HELFRICH BROS BOILER WORKS INC

Entity type: Profit Corporation

UBI #: 603-344-193

Business ID: 001

Location ID: 0001

Location: Active

Location address: 39 MERRIMACK ST
LAWRENCE MA 01843-1436

Mailing address: 39 MERRIMACK ST
LAWRENCE MA 01843-1436

Excise tax and reseller permit status: Click here

Secretary of State information: Click here

Endorsements

Endorsements held at this location	License #	Count	Details	Status	Expiration date	First issuance date
Spokane General Business - Non-Resident				Active	Mar-31-2027	Dec-13-2013

Owners and officers on file with the Department of Revenue

Owners and officers	Title
HELFRICH JR, VINCENT	
HELFRICH, JOSEPH	

Registered Trade Names

Registered trade names	Status	First issued
HELFRICH BROS BOILER WORKS INC	Active	Dec-13-2013

The Business Lookup information is updated nightly. Search date and time: 11/4/2026 1:23:51 PM

Contact us

How are we doing?
Take our survey!

Don't see what you expected?
Check if your browser is supported

Agenda Sheet for City Council:

Committee: PIES **Date:** 11/10/2026

Committee Agenda type: Reports, Contracts & Claims

Council Meeting Date: 12/02/2026

Date Rec'd	11/4/2026		
Clerk's File #	OPR 2023-0053		
Cross Ref #			
Project #			
Submitting Dept	SOLID WASTE DISPOSAL	**Bid #**	RFQ 5749-22
Contact Name/Phone	TRACE 509-625-6524	**Requisition #**	VB 301426
Contact E-Mail	TBRADBURN@SPOKANECITY.ORG		
Agenda Item Type	Purchase w/o Contract		
Council Sponsor(s)	KKLITZKE		
Sponsoring at Administrators Request	NO		
Lease? NO	**Grant Related?** NO	**Public Works?** NO	
Agenda Item Name	VALUE BLANKET RENEWAL FOR THE PURCHASE OF SODIUM HYDROXIDE		

Agenda Wording

Value blanket renewal 2 of 2 with Oxarc, LLC (Spokane, WA) for the purchase of sodium hydroxide 50% membrane (caustic soda), for use at the Waste to Energy Facility from 2/1/2027 - 1/31/2028 and a total cost not to exceed $105,000.00, plus tax.

Summary (Background)

Sodium hydroxide 50% membrane (caustic soda) is required for feedwater treatment at the Waste to Energy Facility. On Nov. 22, 2022, bidding closed on RFQ 5749-22 for the as-needed annual purchase of caustic soda. Two bids were received and Oxarc was selected as the low cost bidder. The initial value blanket award was for three years with the option of two (2) additional one-year renewals. This will be the second and final renewal. Pricing will increase 10% for this renewal. Increased raw material, manufacturing and supply costs associated with caustic soda have resulted in higher costs.

What impacts would the proposal have on historically excluded communities?

No impacts are identified. Public works services and projects are designed to serve all citizens and businesses. We strive to offer a consistent level of service to all, to distribute public investment throughout the community and to respond to gaps in services identified in various City plans. We recognize the need to maintain affordability and predictability for all solid waste customers and are committed to being financially and environmentally responsible.

How will data be collected, analyzed, and reported concerning the effect of the program/policy by racial, ethnic, gender identity, national origin, income level, disability, sexual orientation, or other existing disparities?

This routine purchase is designed to manage costs and continue to provide solid waste services in support of all ratepayers. It will not impact race, gender identity, national origin, income level, disability, sexual orientation or other existing disparities.

How will data be collected regarding the effectiveness of this program, policy, or product to ensure it is the right solution?

Public Works follows the City's established procurement and public works bidding regulations and policies to bring items forward and then uses contract management best practices to ensure desired outcomes and regulatory compliance.

Describe how this proposal aligns with current City Policies, including the Comprehensive Plan, Sustainability Action Plan, Capital Improvement Program, Neighborhood Master Plans, Council Resolutions, and others?

This work is consistent with annual budget strategies to limit costs and approved projects in the 6-year CIP.

Council Subcommittee Review

n/a

Fiscal Impact

Approved in Current Year Budget?	YES
Total Cost	$ 105,000.00
Current Year Cost	$
Subsequent Year(s) Cost	$

Narrative

This is a chemical supply expense that is planned for annually in the Solid Waste Disposal budget.

Amount		Budget Account
Expense	$ 105,000.00	# 4490-44100-37148-53203
Select	$	#
Select	$	#
Select	$	#
Select	$	#
Select	$	#

Funding Source	Recurring
Funding Source Type	Program Revenue

Is this funding source sustainable for future years, months, etc?

Yes

Expense Occurrence	

Other budget impacts (revenue generating, match requirements, etc.)

Approvals		Additional Approvals	
Dept Head	BRADBURN, TRACE	PURCHASING	PRINCE, THEA
Division Director	FEIST, MARLENE		
Accounting Manager	ALBIN-MOORE, ANGELA		
Legal	FAIRBORN, KATHERINE		
For the Mayor	PICCOLO, MIKE		

Distribution List	
	mdorgan@spokanecity.org
jsalstrom@spokanecity.org	tprince@spokanecity.org
rrinderle@spokanecity.org	

October 1, 2026

Rick Rinderle
City of Spokane

RE: Caustic Soda Price Increase Notice

Dear Rick,

We appreciate the continued partnership between the City of Spokane and Oxarc regarding the supply of Caustic Soda under our existing agreement. As referenced within the original contract terms and conditions, pricing adjustments may be required when significant manufacturer and market cost increases occur within the Caustic Soda industry.

Increased raw material, manufacturing, and supply costs associated with Caustic Soda have resulted in higher costs to Oxarc. These cost increases require an adjustment to our current pricing to support continued product availability and service.

Due to these cost increases, Oxarc must implement a 10% price increase on Caustic Soda supplied to the City of Spokane, effective in accordance with the terms of the current agreement. The current price of $0.3850 will increase to $0.4235, based on the same unit of measure as the current agreement.

This adjustment is necessary to continue providing reliable product availability, transportation, and service support while maintaining supply continuity for your operations. Oxarc remains committed to supporting the City of Spokane with dependable service and competitive market pricing.

We value our relationship and appreciate your understanding regarding these changes. Please feel free to contact me directly with any questions regarding the updated pricing.

Sincerely,

Jared Fritz
Oxarc, LLC

Washington State Department of Revenue

Business Lookup

License Information:

New search Back to results

Entity name: OXARC, LLC

Business name: OXARC, LLC

Entity type: Limited Liability Company

UBI #: 328-037-121

Business ID: 001

Location ID: 0015

Location: Active

Location address: 4003 E BROADWAY AVE
SPOKANE WA 99202-4528

Mailing address: PO BOX 3031
SPOKANE WA 99220-3031

Excise tax and reseller permit status: Click here

Secretary of State information: Click here

Endorsements

Endorsements held at this location	License #	Count	Details	Status	Expiration date	First issuance date
Spokane General Business				Active	Sep-30-2027	Aug-07-2015

Owners and officers on file with the Department of Revenue

Owners and officers	Title
LEIFSEN, CHRIS	PRESIDENT

Registered Trade Names

Registered trade names	Status	First issued
OXARC	Active	Sep-25-1989

View Additional Locations

The Business Lookup information is updated nightly. Search date and time: 11/4/2026 10:26:38 AM

Contact us

How are we doing?
Take our survey!

Don't see what you expected?
Check if your browser is supported

Agenda Sheet for City Council:

Committee: PIES **Date:** 10/13/2026

Committee Agenda type: Reports, Contracts & Claims

Council Meeting Date: 12/02/2026

Date Rec'd	10/6/2026
Clerk's File #	OPR 2025-0114
Cross Ref #	
Project #	
Bid #	
Requisition #	

Submitting Dept	INTEGRATED CAPITAL
Contact Name/Phone	LORENA 6894
Contact E-Mail	LCROUCHER@SPOKANECITY.ORG
Agenda Item Type	Engineer Construction Contract
Council Sponsor(s)	KKLITZKE
Sponsoring at Administrators Request	NO
Lease? NO	**Grant Related?** NO **Public Works?** YES
Agenda Item Name	CONTRACT AMENDMENT WITH SPOKANE ARTS SERVICES FOR NSC

Agenda Wording

Contract amendment with Spokane Arts; this is a "pass through" contracting mechanism for the WSDOT NSC project and does not have a fiscal impact on the City.

Summary (Background)

This is an amendment to an existing contract (OPR 2025-0114) with Spokane Arts for artistic services associated with the Washington State Department of Transportation (WSDOT) North Spokane Corridor (NSC) Project. The City serves as a contracting and payment "pass-through" for WSDOT to retain artistic services through Spokane Arts. This contract amendment associated with OPR 2025-0114 requires contract approval because it is above the contracting value threshold. However, the overall fiscal impact of this contract on the City is negligible, as any costs incurred will be reimbursed by WSDOT through Master Agreement GCB 3086, which serves as the funding mechanism for WSDOT to reimburse the City for eligible NSC-related impact costs.

What impacts would the proposal have on historically excluded communities?

Public works services and projects are designed to serve all citizens and businesses. We strive to offer a consistent level of service to all, distribute public investment throughout the community, and respond to gaps in services identified in various City plans.

How will data be collected, analyzed, and reported concerning the effect of the program/policy by racial, ethnic, gender identity, national origin, income level, disability, sexual orientation, or other existing disparities?

n/a

How will data be collected regarding the effectiveness of this program, policy, or product to ensure it is the right solution?

Public Works follows the City's established procurement and public works bidding regulations and policies to bring items forward and then uses contract management best practices to ensure desired outcomes and regulatory compliance.

Describe how this proposal aligns with current City Policies, including the Comprehensive Plan, Sustainability Action Plan, Capital Improvement Program, Neighborhood Master Plans, Council Resolutions, and others?

This work is consistent with annual budget strategies to limit costs and approved projects in the 6-year CIP.

Council Subcommittee Review

n/a

Fiscal Impact

Approved in Current Year Budget?	YES
Total Cost	$ 119,335
Current Year Cost	$ 20,000
Subsequent Year(s) Cost	$ 99,335

Narrative

No fiscal impact; this is a "pass through" contracting and payment mechanism for WSDOT to reimburse Spokane Arts for artistic services associated with the NSC/I-90 Interchange area.

Amount		Budget Account
Neutral	$ 119,335	# 3200 47110 42300 54201 48176
Select	$	#
Select	$	#
Select	$	#
Select	$	#
Select	$	#

Funding Source One-Time

Funding Source Type Grant

Is this funding source sustainable for future years, months, etc?

Yes; fee associated with this contract will be reimbursed by WSDOT through Master Agreement GCB 3086

Expense Occurrence

Other budget impacts (revenue generating, match requirements, etc.)

n/a

Approvals		Additional Approvals	
Dept Head	PICANCO, KEVIN		
Division Director	FEIST, MARLENE		
Accounting Manager	ALBIN-MOORE, ANGELA		
Legal	FAIRBORN, KATHERINE		
For the Mayor	PICCOLO, MIKE		

Distribution List

Carly Cortright, ccortright@spokanetransit.com	icmaccounting@spokanecity.org
tax&licenses@spokanecity.org	lcroucher@spokanecity.org
kpicanco@spokanecity.org	eraea@spokanecity.org
interim@spokanearts.org	karen@karenmobley.com

City Clerk's No. OPR 2025-0014

City of Spokane

CONTRACT AMENDMENT

Title: **SPOKANE ARTS NORTH-SOUTH CORRIDOR ARTISTIC SERVICES**

THIS CONTRACT AMENDMENT is made and entered into by and between the **City of Spokane**, a Washington municipal corporation ("City"), and **Spokane Arts**, whose address is PO Box 978, Spokane, Washington 99210 ("**Organization**"), individually hereafter referenced as a "Party," and together as the "Parties."

WHEREAS, the Parties entered into a Contract wherein the Organization agreed to provide Artistic Services Related to the North South Corridor Project ("NSC Project") under the Master Agreement GCB 3086 Contract between the City and the Washington State Department of Transportation ("WSDOT ") for NSC Project reimbursements; and

WHEREAS, the City serves as the contracting and payment "Pass Through" for WSDOT to retain Organization for the NSC Project; and

WHEREAS, a change (Task Order A2 Amendment 3) or revision of the NSC Project has been requested, thus the original Contract needs to be formally amended by this written document.

NOW, THEREFORE, in consideration of these terms, the Parties mutually agree as follows:

1. CONTRACT DOCUMENTS.
The Contract, dated January 27, 2025, any previous amendments, addendums and/or extensions/renewals thereto, are incorporated by reference into this Contract Amendment as though written in full and shall remain in full force and effect except as provided herein.

2. EFFECTIVE DATE.
This Contract Amendment shall become effective on November 1, 2026.

3. AMENDMENT.
The Scope of Work in the original Contract is revised to include the additional artistic services set forth in the attached Amended Scope of Work.

4. COMPENSATION.
The City shall pay an additional amount not to exceed **ONE HUNDRED NINETEEN THOUSAND THREE HUNDRED THIRTY-FIVE AND NO/100 DOLLARS** (**$119,3350.00**) plus sales tax if applicable, for everything furnished and done under this Contract Amendment. This is the maximum amount to be paid under this Contract Amendment, and shall not be exceeded without

the prior written authorization of the City, memorialized with the same formality as the original Contract and this document.

IN WITNESS WHEREOF, in consideration of the terms, conditions and covenants contained, or attached and incorporated and made a part, the parties have executed this Contract Amendment by having legally-binding representatives affix their signatures below.

SPOKANE ARTS

By_____
Signature Date

_____
Type or Print Name

_____
Title

Attest:

_____
City Clerk

CITY OF SPOKANE

By_____
Signature Date

_____
Type or Print Name

_____
Title

Approved as to form:

_____
Assistant City Attorney

Attachments that are part of this Agreement:

Amended Scope of Work document

26-280b

Deliverables Schedule for Architectural Feature VLoS A Designs

Artist Contract Deliverables Summary

Project Deliverables for Bridge Architect work with Artist to develop contract plans representing Architectural Features on structural surfaces as determined through Community engagement. Cost per design based on input from Artist design effort for surfaces provided by the Bridge Architect. "Fixed Geometry" surfaces have been previously determined in size. Design effort for "Fixed Geometry" surfaces are a function of the number of designs created and not the quantity of locations they are used. No extra fee to be charged for the number of locations designs are applied under proposed contracts. "Unique Geometry" surfaces are preliminary and may change. Artist has been made aware but shall not affect the design process. Bridge Architect will adjust as needed once the structural design geometry is finalized. The distribution of paid fees for each Deliverable is a function of the effort provided by the Artist. The 30% Design requires the largest effort by the Artist. The 60% is more balanced between Artist and Bridge Architect. The 90% Design is more of a final review opportunity for the Artist to verify Contract plans reflect Design intent. Bridge Architect to bring these plans to 100%. Note that all Deliverables shall be in an electronic format compatible with SketchUp or CAD software. Unit cost table provided by Artist shown.

Artist Unit Costs Table

SCOPE OF WORK & UNIT PRICING

Design Element	Estimated Hours Per Unit	Quantity	Unit Price	Estimated Total
Medallions	10 hrs	3	$1,250	$3,750
Curtain Walls	10-15 hrs	1	$1,250-$1,875	$2,250
Retaining Walls (diverse sizes)	15–20 hrs	30	$1,875–$3,750	$56,250–$75,000
Continuous RTW	10-15 hrs*	2	$1,250-1,875	$3,000-$4,500*
End Caps	10-15 hrs	1	$1,250-$1,875	$1,500-$2,250
Columns	10-15 hrs	1	$1,250-$1,875	$1,500- $1,800
Crossbeams	10-15 hrs	1	$1,250-$1,875	$1,500-$1,800
Abutments	15-20 hrs	10	$2,250-$3,750	$22,500
Community Meetings, WSDOT meetings & Consultation (fixed fee)	12 hrs	Up to 12	—	$2000

Note: *Quantity of design elements are based on the VloS Map 2025 / NSC connection to I-90 (provided by WSDOT). Some elements with quantity (1) might not be requested in the scope of work but they are available as a price reference just in case.*

WSDOT Deliverable Hold Point	Definition of WSDOT Deliverable Requirements as related to artist work	Relative to Artist
10% Design Deliverable	Scoping level concepts for approval. Defined as the themes created for and approved through Community Engagement.	Completed by Artist
30% Design Deliverable	Preliminary Design level requiring largest design effort by artist. Submit initial design concepts from 10% Design fit to structure surface geometry provided for Architect review.	See table below for Artist submittal details
60% Design Deliverable	Production Design level requiring moderate design effort by artist. Submit draft design concepts from 30% Design fit to structure surface geometry provided for Architect review.	See table below for Artist submittal details
90% Design Deliverable	Final Design level requiring least design effort by artist. Submit draft design concepts from 60% Design fit to structure surface geometry provided for Architect review. See details below.	See table below for Artist submittal details
100% Design Deliverable	Not included in above schedule for artist deliverables. Their work completed. Just sharing plans sheets for information.	N/A to artist

Artist Deliverable Hold Point	%	Description of Deliverable from Artist
30% Design Deliverable	45%	At NTP, Architect provides structural surface geometry 10% design is to be applied. Artist uses this geometry to size the 10% designs to fit to scale on each respective surface. Due 30 days after surface geometry provided by Architect. Delivery method can be through email or other virtual distribution format. (Architect provides artist PDF format of Plan sheets with 30% designs applied for their review and additional design revisions within 7 days of receipt of 30% design from artist.)
60% Design Deliverable	35%	Artist reviews 30% plans with designs. Deliverable provides any revisions comments and provides relief values needed to properly represent design intent through texture. Due 30 days after surface geometry provided by Architect. Delivery method can be through email or other virtual distribution format. (Architect provides artist PDF format of Plan sheets with 60% designs applied for their review and additional design revisions within 7 days of receipt of 60% design from artist.)
90% Design Deliverable	20%	Artist reviews 60% plans with designs. Deliverable provides any revisions comments and provides color palette needed to properly represent design intent. Due 30 days after surface geometry provided by Architect. Delivery method can be through email or other virtual distribution format. (Architect provides artist PDF format of Plan sheets with 90% designs applied for their review and additional design revisions within 7 days of receipt of 90% design from artist.)
	100%	

Deliverables Schedule for Architectural Feature VLoS A Designs

Architectural Feature Design Item to receive VLoS A design from Artist	Artist Cost per design $/EA	XL6902 Freya to Appleway Ad 10/27 NTP	XL6902 NTP + 30 days 30	XL6902 +30 days 60	XL6902 +30 days 90	XL6900 Hamilton to Thor Ad 5/28 NTP	XL6900 NTP + 30 days 30	XL6900 +30 days 60	XL6900 +30 days 90	XL6901/XL6903 Trumpet I/C Ad 10/27 NTP	XL6901/XL6903 NTP + 30 days 30	XL6901/XL6903 +30 days 60	XL6901/XL6903 +30 days 90	NOTES - All projects
Fixed Geometry	***$1,562.50***	***= Average Unit Cost per table above ($1250 to $1875 range. Scaled cost per approximate surface size)***												
Medallions	$1,250.00	3 EA	$1,687.50	$1,312.50	$750.00									Same Designs from XL6902
Curtain/End Cap	$1,562.50	3 EA	$2,109.38	$1,640.63	$937.50									Same Designs from XL6903
Column Face/Edge	$1,562.50	3 EA	$2,109.38	$1,640.63	$937.50									Same Designs from XL6904
Crossbeam Face	$1,562.50	3 EA	$2,109.38	$1,640.63	$937.50									Same Designs from XL6905
Unique Geometry - Substructure	***$3,000.00***	***= Average Unit Cost per table above ($2250 to $3750 range. Scaled cost per approximate surface size)***												
Abutment Face - Br #5/6 Havanah	$3,750.00	1 EA	$1,687.50	$1,312.50	$750.00									Unit cost covers one design both abutments
Abutment Face - PB #3	$2,250.00	1 EA	$1,012.50	$787.50	$450.00									Unit cost covers one design both abutments
Buried Structure Headwall - Br #1	$1,250.00					1 EA	$562.50	$437.50	$250.00					Used unit cost of medallion. Similar scale
Abutment Face - Bridge #2	$2,250.00					1 EA	$1,012.50	$787.50	$450.00					Unit cost covers one design both abutments
Abutment Face - PB #1	$2,250.00					1 EA	$1,012.50	$787.50	$450.00					Unit cost covers one design both abutments
Abutment Face - PB #2	$2,250.00					1 EA	$1,012.50	$787.50	$450.00					Unit cost covers one design both abutments
Abutment Face - Bridge #11	$3,000.00									1 EA	$1,350.00	$1,050.00	$600.00	Bridge has only one abutment
Abutment Face - Bridge #12	$3,000.00									1 EA	$1,350.00	$1,050.00	$600.00	Bridge has only one abutment
Abutment Face - PB #4	$2,250.00									1 EA	$1,012.50	$787.50	$450.00	Unit cost covers one design both abutments
Unique Geometry - SEW type walls	***$1,562.50***	***= Average Unit Cost per table above ($1250 to $1,875, range. Scaled cost per approximate surface size)***												
Br #5/6 Walls (Continuous/MSE)	$1,562.50	1 EA	$703.13	$546.88	$312.50									Need to verify type & size with Region
PB #3 Walls (Continuous/MSE)	$1,562.50	4 EA	$2,812.50	$2,187.50	$1,250.00									Scale smaller than average effort needed.
Br #1 Walls (Continuous/MSE)	$1,875.00					1 EA	$843.75	$656.25	$375.00					Scale smaller than average effort needed.
PB #1 Walls (Continuous/MSE)	$1,562.50					4 EA	$2,812.50	$2,187.50	$1,250.00					Scale as average effort needed.
PB #2 Walls (Continuous/MSE)	$1,562.50					4 EA	$2,812.50	$2,187.50	$1,250.00					Scale smaller than average effort needed.
Br #3 Walls (Continuous/MSE)	$1,875.00													Scale as average effort needed.
Br #4 Walls (Continuous/MSE)	$1,875.00									1 EA	$843.75	$656.25	$375.00	Scale as average effort needed.
Br #7 Walls (Continuous/MSE)	$1,250.00									1 EA	$562.50	$437.50	$250.00	Scale smaller than average effort needed.
Br #8 Walls (Continuous/MSE)	$1,875.00									1 EA	$843.75	$656.25	$375.00	Scale as average effort needed.
PB #4 Walls (Continuous/MSE)	$1,562.50									2 EA	$1,406.25	$1,093.75	$625.00	Scale smaller than average effort needed.
Br #11 Walls (Triangular/MSE)	$1,250.00									1 EA	$562.50	$437.50	$250.00	Scale smaller than average effort needed.
Br #12 Walls (Triangular/MSE)	$1,250.00									1 EA	$562.50	$437.50	$250.00	Scale smaller than average effort needed.
Unique Geometry - CIP type walls	***$2,812.50***	***= Average Unit Cost per table above ($1875 to $3750, used both wall ranges. Scaled cost per approximate surface size)***												
Br #5/6 Walls (Triangular/CIP)	$2,250.00	3 EA	$3,037.50	$2,362.50	$1,350.00									Need to verify type & size with Region
Br #1 Walls (Triangular/CIP)	$1,875.00					1 EA	$843.75	$656.25	$375.00					Scale smaller than average effort needed.
Br #2 Walls (Continuous/CIP)	$2,250.00					4 EA	$4,050.00	$3,150.00	$1,800.00					Scale as average effort needed.
Br #9 Walls (Triangular/CIP)	$2,250.00					4 EA	$4,050.00	$3,150.00	$1,800.00					Scale as average effort needed.
WSDOT Design Coordination Meetings	***$125.00***	9 hr	$375.00	$375.00	$375.00	9 hr	$375.00	$375.00	$375.00	9 hr	$375.00	$375.00	$375.00	
Pay out Total per Deliverable =		*XL6902*	$17,643.75	$13,806.25	$8,050.00	*XL6900*	$19,387.50	$15,162.50	$8,825.00	*XL6901/ XL6903*	$8,868.75	$6,981.25	$4,150.00	
Pay out date per Deliverable =														
Project Totals =		XL6902 Total =		$39,500.00		XL6900 Total =		$43,375.00		XL6901/XL6903 Total =		$20,000.00		
Total Artist Contract Total =	$102,875.00													

Deliverables Schedule for Architectural Feature VLoS A Designs

		XL6902 Freya to Appleway Ad 10/27				XL6900 Hamilton to Thor Ad 5/28				XL6901/XL6903 Trumpet I/C Ad 10/27				
		NTP	*NTP + 30 days*	*+30 days*	*+30 days*	*NTP*	*NTP + 30 days*	*+30 days*	*+30 days*	*NTP*	*NTP + 30 days*	*+30 days*	*+30 days*	
			30	60	90		30	60	90		30	60	90	NOTES - All projects
Pay out Total per Deliverable =			$17,643.75	$13,806.25	$8,050.00		$19,387.50	$15,162.50	$8,825.00		$8,868.75	$6,981.25	$4,150.00	
Artist Administrative Fee =			$1,411.50	$1,104.50	$644.00		$1,551.00	$1,213.00	$706.00		$709.50	$558.50	$332.00	8%
Spokane Arts Administrative Fee =		*XL6902*	$1,411.50	$1,104.50	$644.00	*XL6900*	$1,551.00	$1,213.00	$706.00	*XL6901/ XL6903*	$709.50	$558.50	$332.00	8%
City Administrative Fee =			$1,058.63	$828.38	$483.00		$1,163.25	$909.75	$529.50		$532.13	$418.88	$249.00	6%
Contingency =			$2,646.56	$2,070.94	$1,207.50		$2,908.12	$2,274.37	$1,323.75		$1,330.31	$1,047.19	$622.50	15%
Project Totals =		XL6902 Total =		$54,115.00		XL6900 Total =		$59,423.75		XL6901/XL6903 Total =		$27,400.00		
Contract Total =	$140,938.75													

**Note by COS on 10/6/2026:*

Scope/fee estimate prepared by WSDOT in collaboration with Spokane Arts. City of Spokane serves as contracting and payment "pass through" for WSDOT to retain Spokane Arts for artistic services related to the NSC. The bold text below relates to the fee/scope of this contract amendment, but both elements of the "pass-through" contract are retained for reference.

OPR 2025- 0014 Amendment 3 (contract between COS and Spokane Arts) to include Artist Contract Total, Artist Administrative Fee, and Spokane Arts Administrative Fee elements, totaling $119,335.

Task Order A2 Amendment 2 (Master Agreement GCB 3086 Contract between COS and WSDOT for NSC project reimbursements) to include all fee elements, totaling $140,938.75.

000002 - 0015 of 0016 - NNNNNN - 00030 JOBID 3FB29003964

CERTIFICATE OF LIABILITY INSURANCE

DATE (MM/DD/YYYY): 09/05/2026

THIS CERTIFICATE IS ISSUED AS A MATTER OF INFORMATION ONLY AND CONFERS NO RIGHTS UPON THE CERTIFICATE HOLDER. THIS CERTIFICATE DOES NOT AFFIRMATIVELY OR NEGATIVELY AMEND, EXTEND OR ALTER THE COVERAGE AFFORDED BY THE POLICIES BELOW. THIS CERTIFICATE OF INSURANCE DOES NOT CONSTITUTE A CONTRACT BETWEEN THE ISSUING INSURER(S), AUTHORIZED REPRESENTATIVE OR PRODUCER, AND THE CERTIFICATE HOLDER.

IMPORTANT: If the certificate holder is an ADDITIONAL INSURED, the policy(ies) must have ADDITIONAL INSURED provisions or be endorsed. If SUBROGATION IS WAIVED, subject to the terms and conditions of the policy, certain policies may require an endorsement. A statement on this certificate does not confer rights to the certificate holder in lieu of such endorsement(s).

PRODUCER

CS&S/HUB INTERNATIONAL NORTHWEST LLC
PO BOX 958489
Lake Mary, FL 32746-8989
1-877-724-2669

CONTACT NAME:
PHONE (A/C, No, Ext):
FAX (A/C, No):
EMAIL ADDRESS:

INSURER(S) AFFORDING COVERAGE	NAIC #
INSURER A: National Fire Insurance of Hartford	20478
INSURER B:	
INSURER C:	
INSURER D:	
INSURER E:	
INSURER F:	

INSURED

SPOKANE ARTS FUND
PO BOX 978
SPOKANE, WA 99210

COVERAGES **CERTIFICATE NUMBER:** **REVISION NUMBER:**

THIS IS TO CERTIFY THAT THE POLICIES OF INSURANCE LISTED BELOW HAVE BEEN ISSUED TO THE INSURED NAMED ABOVE FOR THE POLICY PERIOD INDICATED. NOTWITHSTANDINGANY REQUIREMENT, TERM OR CONDITION OF ANY CONTRACT OR OTHER DOCUMENT WITH RESPECT TO WHICH THIS CERTIFICATE MAY BE ISSUED OR MAY PERTAIN, THE INSURANCE AFFORDED BY THE POLICIES DESCRIBED HEREIN IS SUBJECT TO ALL THE TERMS, EXCLUSIONS AND CONDITIONS OF SUCH POLICIES. LIMITS SHOWN MAY HAVE BEEN REDUCED BY PAID CLAIMS.

INSR LTR	TYPE OF INSURANCE	ADDL INSD	SUBR WVD	POLICY NUMBER	POLICY EFF (MM/DD/YY)	POLICY EXP (MM/DD/YY)	LIMITS	
A	[X] COMMERCIAL GENERAL LIABILITY [ ] CLAIMS-MADE [X] OCCUR GEN'L AGGREGATE LIMIT APPLIES PER: [ ] POLICY [ ] PRO-JECT [X] LOC [ ] OTHER:	Y		5085512562	10/16/26	10/16/27	EACH OCCURRENCE DAMAGE TO RENTED PREMISES (Ea occurence) MED EXP (Any one person) PERSONAL & ADV INJURY GENERAL AGGREGATE PRODUCTS - COMP/OP AGG	$ 2,000,000 $ 1,000,000 $ 10,000 $ 2,000,000 $ 4,000,000 $ 4,000,000
A	AUTOMOBILE LIABILITY [ ] ANY AUTO [ ] OWNED AUTOS ONLY [ ] SCHEDULED AUTOS [X] HIRED AUTOS ONLY [X] NON-OWNED AUTOS ONLY			5085512562	10/16/26	10/16/27	COMBINED SINGLE LIMIT (Ea accident) BODILY INJURY(Per person) BODILY INJURY(Per accident) PROPERTY DAMAGE (Per accident)	$ 1,000,000 $ $ $
	[ ] UMBRELLA LIAB [ ] OCCUR [ ] EXCESS LIAB [ ] CLAIMS-MADE [ ] DED [ ] RETENTION $						EACH OCCURRENCE AGGREGATE	$ $
	WORKERS COMPENSATION AND EMPLOYERS' LIABILITY Y/N ANY PROPRIETOR/PARTNER/EXECUTIVE OFFICER/MEMBER EXCLUDED? [ ] (Mandatory in NH) If yes, describe under DESCRIPTION OF OPERATIONS below	N/A					[ ] PER STATUTE [ ] OTH-ER E.L. EACH ACCIDENT E.L. DISEASE - EA EMPLOYEE E.L. DISEASE - POLICY LIMIT	 $ $ $
	OTHER						[ ] PER STATUTE [ ] OTH-ER E.L. EACH ACCIDENT E.L. DISEASE - EA EMPLOYEE E.L. DISEASE - POLICY LIMIT	 $ $ $

DESCRIPTION OF OPERATIONS / LOCATIONS / VEHICLES (Acord 101, Additional Remarks Schedule, may be attached if more space is required)

Certificate holder is added as an additional insured as provided in the blanket additional insured endorsement as it pertains to work being performed by the named insured under written contract.

CERTIFICATE HOLDER

City of Spokane
808 W Spokane Falls Blvd
Spokane, WA 99201

CANCELLATION

SHOULD ANY OF THE ABOVE DESCRIBED POLICIES BE CANCELLED BEFORE THE EXPIRATION DATE THEREOF, NOTICE WILL BE DELIVERED IN ACCORDANCE WITH THE POLICY PROVISIONS.

AUTHORIZED REPRESENTATIVE

Ryan McConaughey

© 1988-2015 ACORD CORPORATION. All rights reserved.

Washington State Department of Revenue

Business Lookup

License Information:

New search Back to results

Entity name: SPOKANE ARTS FUND

Business name: SPOKANE ARTS FUND

Entity type: Nonprofit Corporation

UBI #: 601-792-904

Business ID: 001

Location ID: 0001

Location: Active

Location address:
801 W RIVERSIDE AVE
STE 100
SPOKANE WA 99201-0908

Mailing address:
PO BOX 978
SPOKANE WA 99210-0978

Excise tax and reseller permit status: Click here

Secretary of State information: Click here

Endorsements

Endorsements held at this lo	License #	Count	Details	Status	Expiration da	First issuance
Spokane Nonprofit Business				Active	Apr-30-2027	Dec-20-2013

Owners and officers on file with the Department of Revenue

Owners and officers	Title
HOOKER, ELIZABETH	
OBERST, R SKYLER	
SWENSEID, ANGELA	

Registered Trade Names

Registered trade names	Status	First issued
SPOKANE ARTS	Active	Apr-26-2018

The Business Lookup information is updated nightly. Search date and time: 8/11/2026 11:25:22 AM

Contact us

How are we doing?
Take our survey!

Don't see what you expected?
Check if your browser is supported

Agenda Sheet for City Council:

Committee: PIES **Date:** 11/10/2026

Committee Agenda type: Reports, Contracts & Claims

Council Meeting Date: 12/02/2026

Date Rec'd	11/3/2026		
Clerk's File #	OPR 2026-0921		
Cross Ref #			
Project #			
Submitting Dept	SOLID WASTE DISPOSAL	**Bid #**	RFQ 6514-26
Contact Name/Phone	TRACE 509-625-6524	**Requisition #**	CR 29102
Contact E-Mail	TBRADBURN@SPOKANECITY.ORG		
Agenda Item Type	Contract Item		
Council Sponsor(s)	KKLITZKE		
Sponsoring at Administrators Request	NO		
Lease? NO	**Grant Related?** NO	**Public Works?** NO	
Agenda Item Name	CONTRACT AWARD FOR OFFSITE REBUILD OF HYDRAULIC/PNEUMATIC		

Agenda Wording

Two year contract award to Hydrotech Generator Repair Plus, Inc. dba Hydraulics Plus, Inc. (Spokane Valley, WA) for the offsite rebuild of cylinders from 1/1/2027 - 12/31/2028 and a total cost not to exceed $240,000.00, plus tax, for the two year term.

Summary (Background)

The Waste to Energy Facility uses various hydraulic and pneumatic cylinders throughout. Rebuilding these cylinders with OEM parts extends their life and is more cost effective than purchasing new cylinders. On Oct. 5, 2026 bidding closed for the as-needed repair of these cylinders, and Hydraulics Plus was the only respondent. The resulting contract award would be for two years, with the possibility of three (3) additional one-year renewals.

What impacts would the proposal have on historically excluded communities?

No impacts are identified. Public works services and projects are designed to serve all citizens and businesses. We strive to offer a consistent level of service to all, to distribute public investment throughout the community and to respond to gaps in services identified in various City plans. We recognize the need to maintain affordability and predictability for all solid waste customers and are committed to being financially and environmentally responsible.

How will data be collected, analyzed, and reported concerning the effect of the program/policy by racial, ethnic, gender identity, national origin, income level, disability, sexual orientation, or other existing disparities?

This routine service is designed to manage costs and continue to provide solid waste services in support of all ratepayers. It will not impact race, gender identity, national origin, income level, disability, sexual orientation or other existing disparities.

How will data be collected regarding the effectiveness of this program, policy, or product to ensure it is the right solution?

Public Works follows the City's established procurement and public works bidding regulations and policies to bring items forward and then uses contract management best practices to ensure desired outcomes and regulatory compliance.

Describe how this proposal aligns with current City Policies, including the Comprehensive Plan, Sustainability Action Plan, Capital Improvement Program, Neighborhood Master Plans, Council Resolutions, and others?

This work is consistent with annual budget strategies to limit costs and approved projects in the 6-year CIP.

Council Subcommittee Review

n/a

Fiscal Impact

Approved in Current Year Budget?	YES
Total Cost	$ 240,000.00
Current Year Cost	$
Subsequent Year(s) Cost	$

Narrative

This is a routine repair and maintenance service expense that is planned for annually in the Solid Waste Disposal budget. The funds are only utilized as-needed.

Amount		Budget Account
Expense	$ 240,000.00	# 4490-44100-37148-54803-34002
Select	$	#
Select	$	#
Select	$	#
Select	$	#
Select	$	#

Funding Source	Recurring
Funding Source Type	Program Revenue

Is this funding source sustainable for future years, months, etc?

Yes

Expense Occurrence	Recurring

Other budget impacts (revenue generating, match requirements, etc.)

Approvals		Additional Approvals	
Dept Head	BRADBURN, TRACE	**PURCHASING**	PRINCE, THEA
Division Director	FEIST, MARLENE		
Accounting Manager	ALBIN-MOORE, ANGELA		
Legal	FAIRBORN, KATHERINE		
For the Mayor	PICCOLO, MIKE		

Distribution List

Loretta Roberts, lroberts@hydraulicsplusinc.com	mdorgan@spokanecity.org
jsalstrom@spokanecity.org	tprince@spokanecity.org
rrinderle@spokanecity.org	

City Clerk's No. OPR 2026-0921

City of Spokane

PERSONAL SERVICES AGREEMENT

Title: **OFF-SITE REBUILD OF HYDRAULIC AND PNEUMATIC CYLINDERS**

This Agreement is made and entered into by and between the **CITY OF SPOKANE** as ("City"), a Washington municipal corporation, and **HYDRO-TECH GENERATOR REPAIR PLUS, INC., dba HYDRAULICS PLUS, INC**., whose address is 5570 East Broadway Avenue, Spokane, Washington 99212, as ("Company"), individually hereafter referenced as a "Party", and together as the "Parties".

WHEREAS, the purpose of this Agreement is to provide Off-Site Rebuild of Hydraulic and Pneumatic Cylinders with OEM Parts – As-Needed for the Waste to Energy Facility; and

WHEREAS, the Company was selected through RFQ 6514-26,

-- NOW, THEREFORE, in consideration of the terms, conditions, covenants and performance of the Scope of Work contained herein, the City and Company mutually agree as follows:

1. TERM OF AGREEMENT.
The term of this Agreement begins on January 1, 2027, and shall run through December 31, 2028, unless amended by written agreement or terminated earlier under the provisions.

2. TIME OF BEGINNING AND COMPLETION.
The Company shall begin the work outlined in the "Scope of Work" ("Work") on the beginning date, above. The City will acknowledge in writing when the Work is complete. Time limits established under this Agreement shall not be extended because of delays for which the Company is responsible, but may be extended by the City, in writing, for the City's convenience or conditions beyond the Company's control.

3. SCOPE OF WORK.
The General Scope of Work for this Agreement is described in the Bid Response to RFQ 6514-26, which is attached as Exhibit B and made a part of this Agreement. In the event of a conflict or discrepancy in the Agreement documents, this City Personal Services Agreement controls.

The Work is subject to City review and approval. The Company shall confer with the City periodically, and prepare and present information and materials (e.g. detailed outline of completed Work) requested by the City to determine the adequacy of the Work or Company's progress.

4. COMPENSATION / PAYMENT.
Total compensation for Company's services under this Agreement shall not exceed **TWO HUNDRED FORTY THOUSAND AND N0/100 DOLLARS ($240,000.00)**, including sales tax, unless modified by a written amendment to this Agreement.

The Company shall submit its applications for payment to Spokane Solid Waste Disposal, Attn: Michelle, email MDorgan@spokanecity.org. **Payment will be made via direct deposit/ACH** within thirty (30) days after receipt of the Company's application except as provided by state law. If the City objects to all or any portion of the invoice, it shall notify the Company and reserves the right to only pay that portion of the invoice not in dispute. In that event, the parties shall immediately make every effort to settle the disputed amount.

5. TAXES, FEES AND LICENSES.

A. Company shall pay and maintain in current status, all necessary licenses, fees, assessments, permit charges, etc. necessary to conduct the work included under this Agreement. It is the Company's sole responsibility to monitor and determine changes or the enactment of any subsequent requirements for said fees, assessments, or changes and to immediately comply.
B. The cost of any permits, licenses, fees, etc. arising as a result of the projects included in this Agreement shall be included in the project budgets.

6. CITY OF SPOKANE BUSINESS LICENSE.
Section 8.01.070 of the Spokane Municipal Code states that no person may engage in business with the City without first having obtained a valid annual business registration. The Company shall be responsible for contacting the State of Washington Business License Services at www.dor.wa.gov or 360-705-6741 to obtain a business registration. If the Company does not believe it is required to obtain a business registration, it may contact the City's Taxes and Licenses Division at (509) 625-6070 to request an exemption status determination.

Subcontractor: Subcontractor expenses will be reimbursed at the actual cost incurred and may not include a markup. Copies of all Subcontractor invoices that are rebilled to the City are required.

7. SOCIAL EQUITY REQUIREMENTS / NON-DISCRIMINATION.
No individual shall be excluded from participation in, denied the benefit of, subjected to discrimination under, or denied employment in the administration of or in connection with this Agreement because of age, sex, race, color, religion, creed, marital status, familial status, sexual orientation including gender expression or gender identity, national origin, honorably discharged veteran or military status, the presence of any sensory, mental or physical disability, or use of a service animal by a person with disabilities. The Company agrees to comply with, and to require that all subcontractors comply with, federal, state and local nondiscrimination laws, including but not limited to: the Civil Rights Act of 1964, the Rehabilitation Act of 1973, the Age Discrimination in Employment Act, and the American's With Disabilities Act, to the extent those laws are applicable.

8. INDEMNIFICATION.
The Company shall defend, indemnify, and hold the City and its officers and employees harmless from all claims, demands, or suits at law or equity asserted by third parties for bodily injury (including death) and/or property damage which arise from the Company's negligence or willful misconduct under this Agreement, including attorneys' fees and litigation costs; provided that nothing herein shall require a Company to indemnify the City against and hold harmless the City

from claims, demands or suits based solely upon the negligence of the City, its agents, officers, and employees. If a claim or suit is caused by or results from the concurrent negligence of the Company's agents or employees and the City, its agents, officers and employees, this indemnity provision shall be valid and enforceable to the extent of the negligence of the Company, its agents or employees. The Company specifically assumes liability and agrees to defend, indemnity, and hold the City harmless for actions brought by the Company's own employees against the City and, solely for the purpose of this indemnification and defense, the Company specifically waives any immunity under the Washington State industrial insurance law, or Title 51 RCW. The Company recognizes that this waiver was specifically entered into pursuant to the provisions of RCW 4.24.115 and was the subject of mutual negotiation. The indemnity and agreement to defend and hold the City harmless provided for in this section shall survive any termination or expiration of this agreement.

9. INSURANCE.

During the period of the Agreement, the Company shall maintain in force at its own expense, each insurance noted below with companies or through sources approved by the State Insurance Commissioner pursuant to Title 48 RCW:

A. Worker's Compensation Insurance in compliance with RCW 51, which requires subject employers to provide workers' compensation coverage for all their subject workers and Employer's Liability Insurance in the amount of $1,000,000.

B. **General Liability Insurance** on an occurrence basis, with a combined single limit of not less than $1,000,000 each occurrence for bodily injury and property damage. It shall include contractual liability coverage for the indemnity provided under this Agreement. It shall provide that the City, its officers and employees are additional insureds but only with respect to the Company's services to be provided under this Agreement.

i. Acceptable **supplementary Umbrella insurance** coverage combined with Company's General Liability insurance policy must be a minimum of $2,000,000, in order to meet the insurance coverage limits required in this Agreement; and

C. Automobile Liability Insurance with a combined single limit, or the equivalent of not less than $1,000,000 each accident for bodily injury and property damage, including coverage for owned, hired and non-owned vehicles.

There shall be no cancellation, material change, reduction of limits or intent not to renew the insurance coverage(s) without thirty (30) days written notice from the Company or its insurer(s) to the City. As evidence of the insurance coverage(s) required by this Agreement, the Company shall furnish acceptable Certificates of Insurance (COI) upon request by the City. The certificate shall specify the City of Spokane as "Additional Insured" specifically for Company's services under this Agreement, as well as all of the parties who are additional insureds, and include applicable policy endorsements, the thirty (30) day cancellation clause, and the deduction or retention level. The Company shall be financially responsible for all pertinent deductibles, self-insured retentions, and/or self-insurance.

10. DEBARMENT AND SUSPENSION.

The Company has provided its certification that it is in compliance with and shall not contract with individuals or organizations which are debarred, suspended, or otherwise excluded from or ineligible from participation in Federal Assistance Programs under Executive Order 12549 and "Debarment and Suspension", codified at 29 CFR part 98.

11. AUDIT.
The Company and its subcontractor shall maintain for a minimum of three (3) years following final payment all records related to its performance of the Agreement. The Company and its subcontractors shall provide access to authorized City representatives, at reasonable times and in a reasonable manner to inspect and copy any such record. In the event of conflict between this provision and related auditing provisions required under federal law applicable to the Agreement, the federal law shall prevail.

12. KEY PERSONS.
The Company shall not transfer or reassign any individual designated in this Agreement as essential to the Work, nor shall those key persons, or employees of Company identified as to be involved in the Project Work be replaced, removed or withdrawn from the Work without the express written consent of the City, which shall not be unreasonably withheld. If any such individual leaves the Company's employment, the Company shall present to the City one or more individuals with greater or equal qualifications as a replacement, subject to the City's approval, which shall not be unreasonably withheld. The City's approval does not release the Company from its obligations under this Agreement.

13. ASSIGNMENT AND SUBCONTRACTING.
The Company shall not assign or subcontract its obligations under this Agreement without the City's written consent, which may be granted or withheld in the City's sole discretion. Any subcontract made by the Company shall incorporate by reference this Agreement, except as otherwise provided. The Company shall ensure that all subcontractors comply with the obligations and requirements of the subcontract. The City's consent to any assignment or subcontract does not release the Company from liability or any obligation within this Agreement, whether before or after City consent, assignment or subcontract.

14. TERMINATION.
Either party may terminate this Agreement, with or without cause, by ten (10) days written notice to the other party. In the event of such termination, the City shall pay the Company for all work previously authorized and performed prior to the termination date.

15. STANDARD OF PERFORMANCE.
The standard of performance applicable to Company's services will be the degree of skill and diligence normally employed by professional Companies performing the same or similar services at the time the services under this Agreement are performed.

16. OWNERSHIP AND USE OF RECORDS AND DOCUMENTS.
Original documents, drawings, designs, reports, or any other records developed or created under this Agreement shall belong to and become the property of the City. All records submitted by the City to the Company shall be safeguarded by the Company. The Company shall make such data, documents and files available to the City upon the City's request. If the City's use of the Company's records or data is not related to this project, it shall be without liability or legal exposure to the Company.

Under Washington State Law (reference RCW Chapter 42.56, the *Public Records Act* [PRA]) all materials received or created by the City of Spokane are ***public records*** and are available to the public for viewing via the City Clerk's Records (online) or a valid Public Records Request (PRR).

17. ANTI KICK-BACK.
No officer or employee of the City of Spokane, having the power or duty to perform an official act

or action related to this Agreement shall have or acquire any interest in the Agreement, or have solicited, accepted or granted a present or future gift, favor, service or other thing of value from or to any person involved in this Agreement.

18. MISCELLANEOUS PROVISIONS.

A. **Amendments/Modifications**: This Agreement may be modified by the City in writing when necessary, and no modification or Amendment of this Agreement shall be effective unless signed by an authorized representative of each of the parties hereto.

B. The Company, at no expense to the City, shall comply with all laws of the United States and Washington, the Charter and ordinances of the City of Spokane; and rules, regulations, orders and directives of their administrative agencies and officers. Without limiting the generality of this paragraph, the Company shall comply with the requirements of this Section.

C. This Agreement shall be construed and interpreted under the laws of Washington. The venue of any action brought shall be in a court of competent jurisdiction, located in Spokane County, Washington.

D. **Captions**: The titles of sections or subsections are for convenience only and do not define or limit the contents.

E. **Severability**: If any term or provision is determined by a court of competent jurisdiction to be invalid or unenforceable, the remainder of this Agreement shall not be affected, and each term and provision shall be valid and enforceable to the fullest extent permitted by law.

F. **Waiver**: No covenant, term or condition or the breach shall be deemed waived, except by written consent of the party against whom the waiver is claimed, and any waiver of the breach of any covenant, term or condition shall not be deemed a waiver of any preceding or succeeding breach of the same or any other covenant, term of condition. Neither the acceptance by the City of any performance by the Company after the time the same shall have become due nor payment to the Company for any portion of the Work shall constitute a waiver by the City of the breach or default of any covenant, term or condition unless otherwise expressly agreed to by the City in writing.

G. **Entire Agreement**: This document along with any exhibits and all attachments, and subsequently issued addenda, comprises the entire agreement between the City and the Company. If conflict occurs between Agreement documents and applicable laws, codes, ordinances or regulations, the most stringent or legally binding requirement shall govern and be considered a part of this Agreement to afford the City the maximum benefits.

H. **No personal liability**: No officer, agent or authorized employee of the City shall be personally responsible for any liability arising under this Agreement, whether expressed or implied, nor for any statement or representation made or in any connection with this Agreement.

IN WITNESS WHEREOF, in consideration of the terms, conditions and covenants contained, or attached and incorporated and made a part, the parties have executed this Agreement by having legally-binding representatives affix their signatures below.

HYDRO-TECH GENERATOR REPAIR PLUS INC., dba HYDRAULICS PLUS, INC	**CITY OF SPOKANE**
By_____	By_____
Signature Date	Signature Date

Type or Print Name	Type or Print Name
Title	Title
Attest:	Approved as to form:
City Clerk	Assistant City Attorney

Attachments that are part of this Agreement:

Exhibit A – Certificate Regarding debarment
Exhibit B – Company's Bid Response to RFQ 6514-26

26-281a

EXHIBIT A

CERTIFICATION REGARDING DEBARMENT, SUSPENSION, INELIGIBILITY AND VOLUNTARY EXCLUSION

1. The undersigned (i.e., signatory for the Subrecipient / Contractor / Consultant) certifies, to the best of its knowledge and belief, that it and its principals:

   a. Are not presently debarred, suspended, proposed for debarment, declared ineligible, or voluntarily excluded from covered transactions by any federal department or agency;
   b. Have not within a three-year period preceding this contract been convicted or had a civil judgment rendered against them for commission of fraud or a criminal offense in connection with obtaining, attempting to obtain, or performing a public (federal, state, or local) transaction or contract under a public transaction; violation of federal or state antitrust statutes or commission of embezzlement, theft, forgery, bribery, falsification or destruction of records, making false statements, tax evasion, receiving stolen property, making false claims, or obstruction of justice;
   c. Are not presently indicted or otherwise criminally or civilly charged by a government entity (federal, state, or local) with commission of any of the offenses enumerated in paragraph (1)(b) of this certification; and,
   d. Have not within a three-year period preceding this contract had one or more public transactions (federal, state, or local) terminated for cause or default.

2. The undersigned agrees by signing this contract that it shall not knowingly enter into any lower tier covered transaction with a person who is debarred, suspended, declared ineligible, or voluntarily excluded from participation in this covered transaction.

3. The undersigned further agrees by signing this contract that it will include the following clause, without modification, in all lower tier covered transactions and in all solicitations for lower tier covered transactions:

   Certification Regarding Debarment, Suspension, Ineligibility and Voluntary Exclusion – Lower Tier Covered Transactions

   1. The lower tier contractor certified, by signing this contract that neither it nor its principals is presently debarred, suspended, proposed for debarment, declared ineligible, or voluntarily excluded from participation in this transaction by any federal department or agency.

   2. Where the lower tier contractor is unable to certify to any of the statements in this contract, such contractor shall attach an explanation to this contract.

4. I understand that a false statement of this certification may be grounds for termination of the contract.

Name of Subrecipient / Contractor / Consultant (Type or Print)	Program Title (Type or Print)
Name of Certifying Official (Type or Print) Title of Certifying Official (Type or Print)	Signature Date (Type or Print)

EXHIBIT B

Bid Response Summary

Bid Number	**RFQ 6514-26**
Bid Title	**OFF SITE REBUILD OF HYDRAULIC AND PNEUMATIC CYLINDERS WITH OEM PARTS - AS NEEDED**
Bid Base Currency	**USD**
Due Date	**Monday, October 5, 2026 9:00:00 AM [(UTC-08:00) Pacific Time (US & Canada)]**
Bid Status	**Closed to Bidding**
Company	**Hydraulics Plus Inc.**
Submitted By	**Loretta Roberts - Wednesday, September 23, 2026 3:03:05 PM [(UTC-08:00) Pacific Time (US & Canada)]** **lroberts@hydraulicsplusinc.com (509) 536-9464**
Comments	

Question Responses

Group	Reference Number	Question	Response
BACKGROUND			
	#1	The City of Spokane, Solid Waste Disposal, Waste To Energy Facility (COS WTEF), is located at 2900 S. Geiger Blvd, Spokane WA 99224-5400. COS WTEF operates a 24-hour/365 day per year environment and works under aggressive deadlines and schedules that require vendors to provide high service levels.	Understood and Acknowledged
	#2	COS WTEF is initiating this Request for Quote (RFQ) to solicit Bids from vendors who have a proven ability to provide as needed, hydraulic and pneumatic cylinder rebuilding services, with OEM parts only. Vendor to perform services offsite at vendor facility.	Understood and Acknowledged
	#2.1	Vendor must be able to rebuild each of the cylinder types listed on Cylinder Listing, that is located in the “Documents Tab”. The intent is to extend and maximize the functional life of the previously purchased cylinders.	Understood and Acknowledged
	#3	The winning Vendor(s) shall receive a two-year, unit priced contract for a not-to-exceed amount of $200,000.00. Payment would only be made for actual services requested, performed and accepted, in accordance with the current contract unit pricing. Vendor’s prices shall be firm throughout the first year of the contract period, 1/1/2027 through 12/31/2027.	Understood and Acknowledged
SUBMISSION OF BIDS			
	#1	Bid Responses shall be submitted electronically through the City of Spokane’s bidding portal: https://spokane.procureware.com on or before the Due Date and time mentioned above. Hard, e-mailed or faxed copies and/or late quotes shall not be accepted.	Understood and Acknowledged
	#2	The City of Spokane is not responsible for quotes electronically submitted late. It is the responsibility of the Bidder to be sure the quote is electronically submitted sufficiently ahead of time to be received no later than the bid due date and time.	Understood and Acknowledged

	#3	All communication between the Bidder and the City upon receipt of this quote shall be via the “Clarification Tab” within ProcureWare. Any other communication will be considered unofficial and non-binding on the City of Spokane.	Understood and Acknowledged
BIDDERS' REPRESENTATION			
	#1	Each bidder by making its bid represents that it has read and understands the bidding documents and attachments.	I agree and I acknowledge
SUBSTITUTIONS			
	#1	Each bidder represents that its bid is based upon the materials and equipment described in the bidding documents.	Understood and Acknowledged
	#2	No substitution will be considered unless written request has been submitted to the City department representative for approval at least five (5) days prior to the date for receipt of bids. Each request shall include a complete description of the proposed substitute, the name of the material or equipment for which it is to be substituted, manufacturer, warranty, availability of qualified and trained installers, drawings, cuts, performance and test data and any other data or information necessary for a complete evaluation.	Understood and Acknowledged
	#3	If the City department representative approves any proposed substitution, the approval will be set forth in an addendum.	Understood and Acknowledged
INTERPRETATION			
	#1	If the Bidder discovers any errors, discrepancies or omissions in the quote specifications, or has any questions about the specifications, the Bidder must notify Purchasing in writing. Any addenda issued by the Purchaser will be incorporated into the any resulting Contract.	Understood and Acknowledged
WITHDRAWAL OF BIDS			
	#1	Bidders may withdrawal Bid prior to the scheduled bid due date and time. Unless otherwise specified, no Quote may be withdrawn for a minimum of ninety (90) calendar days after the bid due date.	I agree and I acknowledge
EVALUATION OF BIDS			
	#1	Shall be based upon the following criteria, where applicable: A. The price, including sales tax and the effect of discounts. Price may be determined by life cycle costing or total cost quoting, when advantageous to the Purchaser. B. The quality of the items quoted, their conformity to specifications and the purpose for which they are required. C. The Bidder’s ability to provide prompt and efficient service and/or delivery. D. The character, integrity, reputation, judgment, experience and efficiency of the Bidder. E. The quality of performance of previous contracts or services. F. The previous and existing compliance by the Bidder with the laws relating to the contract or services. G. Uniformity or interchangeability. H. Any other information having a bearing on the decision to award Value Blanket Order.	Understood and Acknowledged
BIDDING ERRORS			

	#1	Unit pricing will prevail in the circumstance of unit and extension pricing discrepancies. When, after the tabulation of Bids, a Bidder claims error, and requests to be relieved of award, Bidder will be required to promptly present certified work sheets. The Purchaser will review the work sheets and if the Purchaser is convinced, by clear and convincing evidence, that an honest, mathematically excusable error or critical omission of costs has been made, the Bidder may be relieved of its Bid.	Understood and Acknowledged
REJECTION OF BIDS			
	#1	The Purchaser reserves the right to reject any or all Bids; to waive minor deviations from the specifications, to waive any informality in Bids received, whenever it is in the Purchaser's best interest, and to accept or reject all or part of this Bid at prices shown.	Understood and Acknowledged
EXECUTION OF CONTRACT			
	#1	Within ten (10) days of contract award, the Contractor shall sign and return to the City an executed copy of the contract and approved evidence of insurance unless otherwise mutually agreed by the City and Contractor.	I agree and I acknowledge
AWARD OF CONTRACT			
	#1	Any resulting Contract shall be awarded by City Council, to the Bidder whose Bid is the most favorable to the City, taking into consideration price and the other evaluation factors. INTERLOCAL AND STATE CONTRACTS WHERE APPLICABLE WILL BE CONSIDERED AS A BID. Unsuccessful Bidders will not automatically be notified of Bid results.	Understood and Acknowledged
PAYMENT TERMS			
	#1	Vendor acknowledges that payment shall be made via direct deposit/ACH (except as provided by state law) Net 30 after receipt of the goods/services ordered. A completed ACH application is required before a City order will be issued. If the City objects to all or any portion of an invoice, it shall notify the supplier and reserve the right to pay only that portion of the invoice not in dispute. In that event, all parties shall immediately make every effort to settle the disputed amount.	I agree and I acknowledge
INVOICING			
	#1	Invoices must be submitted to Spokane Solid Waste Disposal within 30 days of performing services. • All Invoices shall include type of services performed. • Invoices shall reference and list OPR #202X-XXXX. • Payment of invoices shall be contingent upon receipt of sufficient detail to permit identification of the services performed and compliance with contract conditions. Original invoices are required and shall not be approved for payment until all services per request have been satisfactorily performed. Invoices shall be emailed to mdorgan@spokanecity.org.	I agree and I acknowledge
INVOICING LABOR HOURS			
	#1	Labor charges that fall less than an hour or between hour marks will be billed in tenth of an hour increments. (i.e. 2 hours, 24 minutes = 2.4 hours). Do not include sales tax in hourly rate.	I agree and I acknowledge

INVOICING MARKUP PERCENTAGE			
	#1	Materials will be marked up based off of the Vendor's base costs before tax. Any invoice in which Vendor's markup percentage has been applied, the Vendor is required to state on the invoice the actual cost the Vendor had incurred prior to Vendor's markup percentage above cost being applied to equate to amount being invoice. Throughout the life of the contract to include any renewals, the City reserves the right to request copies of any invoices that the Vendor had received to verify Vendor's cost incurred, prior to Vendor's mark up being applied.	I agree and I acknowledge
TERMS AND CONDITIONS			
	#1	Bidder acknowledges that they have read and understand the Terms and Conditions Document in the "Documents" tab. If answer is "I don't agree and I don't acknowledge", include requested exception on separate page and title as "Exception to Terms and Conditions", and upload in response #1.1 below. The City will consider and determine if exception will be accepted.	I agree and I acknowledge
	#1.1	EXCEPTIONS to Terms and Conditions: If you took exception above, upload here.	
	#2	ELIGIBILITY FOR CITY CONTRACTS: Section 18.09.050 of the Spokane Municipal Code states that the recipient of a City contract, award or purchase order shall certify that it is not knowingly or intentionally a nuclear weapons producer. The Bidder certifies that his/her firm is not a nuclear weapons producer.	Certifies
PCB CERTIFICATION			
	#1	In accordance with SMC 7.06.172(A), the Bidder certifies that the products bid and to be supplied (to include product packaging) do not contain polychlorinated biphenyls (PCB's). Moreover and consistent with SMC 7.06.172(B), the City of Spokane, at its sole discretion, may require (at no cost to the City) the apparent successful bidder to provide testing data (prior to contract execution or issue of purchase order) from an accredited laboratory or testing facility documenting the proposed products and or product packaging polychlorinated biphenyl levels.	Understood and Acknowledged
	#2	As far as you know has this type product been tested for PCBs by a WA State accredited lab using EPA Method 1668c (or equivalent as updated)?	Yes
	#3	If so were PCBs found at a measurable level?	Yes
	#4	As far as you know has this actual product been tested for PCBs by a WA State accredited lab using EPA Method 1668 (or equivalent as updated)?	Yes
	#5	If so attach the results or note from whom the results can be obtained.	
	#6	Do you have reason to believe the product contains measurable levels of PCBs?	No
	#7	Do you have reason to believe the product packaging contains measurable levels of PCBs?	No

BIDDER INFORMATION			
	#1	Please indicate the appropriate point of contact (including phone number and email) regarding this Bid and placement of orders if awarded. If these actions will not be managed by the same person, please explicitly specify all relevant contacts.	Loretta Roberts 509-536-9464 lroberts@hydraulicsplusinc.com
	#2	Provide the name, phone number, and email address for the person in your Company authorized to sign a contract through the DocuSign process used by the City.	Loretta Roberts
ORGANIZATION			
	#1	Bidder Should Enter If Proposal Is of an Individual, Partnership, Corporation, and Existing Under The Laws of What US State. Enter Information Here	profit corporation
UBI NUMBER			
	#1	The Vendor shall be a Washington State registered at time of Bid submittal. Enter Washington Unified Business Identification Number (WA UBI) Here:	601 983 496
CITY OF SPOKANE BUSINESS REGISTRATION REQUIREMENT			
	#1	Section 8.01.070 of the Spokane Municipal Code states that no person may engage in business with the City without first having obtained a valid annual business registration. The Bidder shall be responsible for contacting the State of Washington Business License Services at www.dor.wa.gov or 1-360-705-6741 to obtain a business registration. If the Bidder does not believe it is required to obtain a business registration, it may contact the City's Taxes and Licenses Division at (509) 625-6070 to request an exemption status determination. Microsoft Word - Business License Exemption Request Form - Rev 03-2025 (https://static.spokanecity.org/documents/business/doingbusiness/business-license-exemption-request-form-2025-05-22.pdf)	Understood and Acknowledged
	#2	City of Spokane Business Registration Number	Business ID #001
PROPRIETARY INFORMATION/PUBLIC DISCLOSURE			

	#1	All materials submitted to the City in responses to this competitive procurement shall become the property of the City. All materials received by the City are public records and are subject to being released pursuant to a valid public records request. Washington state law mandates that all documents used, received, or produced by a governmental entity are presumptively public records, and there are few exemptions. Chapter 41.56 RCW. When responding to this competitive procurement, please consider that what you submit will be a public record. If you believe that some part of your response constitutes legally protected proprietary information, you MUST submit those portions of your response as a separate part of your response, and you MUST label it as “PROPRIETARY INFORMATION.” If a valid public records request is then received by the City for this information, you will be given notice and an opportunity to go to court to obtain an injunction to prevent the City from releasing this part of your response within 10 business days from the date of the notice. If no injunction is obtained, the City is legally required to release the records. The City will neither look for nor honor any claims of “proprietary information” that are not within the separate part of your response.	Understood and Acknowledged
BIDDER PREQUALIFICATION			
	#1	Prior to award of contract or purchase, Bidders shall be required to submit evidence of sufficient facilities, equipment, experience and financial ability to insure completion of the work, unless waived by the COS WTEF.	Understood and Acknowledged
ADDITIONAL SERVICES			
	#1	The City of Spokane reserves the right to purchase additional services at the resulting contract's current unit pricing. Vendor agrees to perform services at the resulting contract's current unit pricing at with the same terms and conditions.	Yes
INSURANCE			
	#1	INSURANCE. During the period of the Agreement, the company shall maintain in force at its own expense, each insurance noted below with companies or through sources approved by the State Insurance Commissioner pursuant to Title 48 RCW:	Understood and Acknowledged
	#2	A. Workers’ Compensation Insurance in compliance with RCW 51, which requires subject employers to provide Worker’s Compensation coverage for all their subject workers and Employers Liability Insurance (Stop Gap) in the amount of $1,000,000. Note: Workers Compensation may not be listed on the COI since WA businesses are required to obtain through L & I. Employers Liability or Stop Gap is separate coverage and can be found under the GL or in the Workers Compensation section on COI. 	Understood and Acknowledged

	#3	B. General Liability Insurance on an occurrence basis, of not less than $1,000,000 each occurrence/$2,000,000 aggregate for bodily injury and property damage. It shall include contractual liability coverage for the indemnity provided under this Agreement. It shall provide that the City, its officers and employees are additional insureds but only with respect to the Company's services to be provided under this Agreement. i. Acceptable supplementary Umbrella insurance coverage combined with Company's General Liability insurance policy must be a minimum of $1,000,000, in order to meet the insurance coverage limits required in this Agreement; and 	Understood and Acknowledged
	#4	C. Automobile Liability Insurance with a combined single limit, or the equivalent of not less than$1,000,000 each accident for bodily injury and property damage, including coverage for owned, hired and non-owned vehicles as applicable.	Understood and Acknowledged
	#5	There shall be no cancellation, material change, reduction of limits or intent not to renew the insurance coverage(s) without thirty (30) days written notice from the Company or its insurer(s) to the City. Except with regard to Professional Liability (when required) and Worker's Compensation Insurance, each of the policies shall endorse the City of Spokane as an "Additional Insured" specifically for Company's services under this Agreement, as well as all of the parties who are additional insureds, and include applicable policy endorsements, the thirty (30) day cancellation clause, and the deduction or retention level. The Company shall be financially responsible for all pertinent deductibles, self-insured retentions, and/or self-insurance. As evidence of the insurance coverage(s) required by this Agreement, the Company shall furnish acceptable Certificates of Insurance (COI) upon request by the City.	Understood and Acknowledged
	#6	Certificate Holder Shall state: City of Spokane, 808 W. Spokane Falls Blvd, Spokane WA 99201	Understood and Acknowledged
MINORITY BUSINESS ENTERPRISE			
	#1	Vendor (is___, is not ___) a Minority Business Enterprise. A Minority Business Enterprise is defined as a "business, privately or publicly owned, at least 51% of which is owned by minority group members." For purpose of this definition, minority group members are Blacks, Hispanics, Asian Americans, American Indian or Alaskan Natives, or Women.	Is
SMALL BUSINESS			
	#1	Vendor (is ___, is not ___) a small business concern. (A small business concern for the purpose of government procurement is a concern, including its affiliates, which is independently owned and operated, is not dominant in the field of operations in which it is bidding on government contracts, and can further qualify under the criteria concerning number of employees, average annual receipts, or other criteria as prescribed by the Small Business Administration).	Is Not
NON-COLLUSION			

	#1	The Bidder certifies that his/her firm has not entered into any agreement of any nature whatsoever to fix, maintain, increase or reduce the prices or competition regarding the items covered by this RFQ	Certifies No Agreement Was Entered
ACCEPTANCE PERIOD			
	#1	Bidders must provide a minimum of ninety (90) calendar days for acceptance by the City from the Bid Due Date.	I agree and I acknowledge
CONTRACT PERIOD			
	#1	Any Contract resulting from this RFQ will be for a two-year period, beginning January 1, 2027, and terminates on December 31, 2028 The Vendor's prices shall be firm throughout the first year, January 1, 2027 to December 31, 2027, with annual pricing adjustments on the anniversary of the award with justification.	I agree and I acknowledge
RENEWAL			
	#1	Contract renewals or extensions shall be initiated at the discretion of the City and subject to mutual agreement. The contract may be extended for three (3) additional one-year contract periods with the total contract period not to exceed five (5) years.	I agree and I acknowledge
GENERAL INSTRUCTIONS			
	#1	The items to be furnished by the Vendor on this bid must be of the latest possible design and production.	Understood and Acknowledged
	#2	Time is of the essence in the performance of this contract after a delivery schedule is established.	Understood and Acknowledged
	#3	Successful Bidder will designate a representative who will be available during regular City business hours to serve as a primary contact for the City in the implementation of this supply agreement.	Understood and Acknowledged
	#4	The City of Spokane reserves the right to accept or reject any variance from the published specifications and to award the Bid in a manner that is most advantageous to the continued efficient operation of the City.	Understood and Acknowledged
	#5	The City reserves the right to accept or reject any part of or all Bids and to accept the Bid(s) deemed to be in the best interest of the City. The City may choose from more than one vendor.	Understood and Acknowledged
	#6	As applicable Safety Data Sheets must be included with Bid.	
	#7	Bidder should be aware that Bids may be rejected if all questions are not completely and correctly answered.	Understood and Acknowledged
SPECIAL INSTRUCTIONS - GENERAL			
	#1	If the products differ from the provisions contained herein, these differences must be explained in detail.	Understood and Acknowledged
	#2	Vendors found to have "overstated" the true ability of their product shall reimburse the City for all costs incurred with remanufacturing or replacement of units until all criteria has been satisfied. These costs shall also include legal, rentals, travel, etc.	I agree and I acknowledge

	#3	The omission of any standard feature described herein shall not void the bidder's responsibility to furnish a complete unit with all standard equipment of the manufacturer's latest model and design. All parts to be furnished shall be new and unused.	Understood and Agreed
	#4	The Vendor guarantees all work, labor and materials for one (1) year following final acceptance of the Work. If any unsatisfactory condition or defect develops within that time, the Vendor shall immediately place the Work in a satisfactory condition, and further repair all damage caused by the condition or defect at its sole expense. This guarantee shall not apply to Work, which has been abused or neglected by the City.	Understood and Agreed
	#5	Federal and State laws governing this product and its final certification must be satisfied	Understood and Agreed
	#6	It shall be the Supplier's responsibility to conform to all Federal Standards for certification.	Understood and Agreed
	#7	If you took exception to above, explain in detail.	
TECHNICAL SPECIFICATIONS			
	#1	Any technical specifications and general provisions listed are the minimum acceptable requirements and failure to comply may be used as a basis for rejection of the Bid.	Understood and Agreed
	#2	Awarded Vendor will be responsible for the furnishing of all labor, supervision, administration, organization, reports, materials, tools, construction equipment, transportation, supplies, parts, consumables materials, and other items of work and costs necessary for the proper for the proper execution and completion of the services described in the RFQ 6514-26 bid document, attachments, and any reference specifications. The apparent silence or omission as to any detail of any work to be done or materials to be furnished and required for the proper performance of the services, shall be regarded as meaning that the best general practice is to prevail, and that material and workmanship of the best quality are to be used, and interpretation of the specifications shall be interpreted on this basis.	Understood and Acknowledged
	#3	Vendor must be able to rebuild each of the cylinder types listed on Cylinder Listing, that is located in the "Documents Tab". The intent is to extend and maximize the functional life of the previously purchased cylinders.	I agree and I acknowledge
	#3.1	Bidder has reviewed the Cylinder Listing, that is located in the "Documents Tab".	I agree and I acknowledge
	#3.2	As part of this request, Bidders MUST submit part listings required to complete a rebuild of EACH cylinder type that is listed on the Cylinder Listing, that is located in the "Documents" Tab. Upload Here, or bidder will be considered non-responsive:	Parts List Waste To Energy.docx
	#4	Bidders must submit cover letters stating qualifications for rebuilding EACH cylinder types listed on Cylinder Listing, to including stating name(s) and address(es) of Original Equipment Manufacturer (OEM) and distributors (if applicable) to be used. Upload Letter.	RFQ_6514-26_Cylinder_Rebuild_Qualifications_Cov

	#5	The COS WTEF Maintenance Supervisor will communicate with awarded Vendor and notify when a cylinder needs rebuild.	Understood and Acknowledged
	#6	Rebuilt Services shall include but not limited to:	Yes
	#6.1	Vendor will be responsible for picking up cylinder(s) from the COS WTEF and transporting to Vendor's offsite facility for rebuild. Vendor agrees to bear all risks of loss, injury or destruction of items.	I agree and I acknowledge
	#6.2	Vendor shall disassemble and inspect cylinder for surface damage	I agree and I acknowledge
	#6.2.1	The Vendor shall notify the COS WTEF via email, the extent of rebuilt needed and the cost thereof, to enable the COST WTEF to make determination if rebuilt cost would exceed 75 percent of a new cylinder.	I agree and I acknowledge
	#6.2.2	Rebuilds shall be accomplished with new OEM Parts; unless Vendor obtains COS WTEF approval, on a case-by-case, contingent upon Vendor advising COS WTEF of delays and availability of OEMS, and making recommendations of parts that are capable of meeting or exceeding the quality of OEM parts without any damage or modification to cylinder.	I agree and I acknowledge
	#6.3	Ensure any parts are re-chromed as needed.	I agree and I acknowledge
	#6.4	Measure parts to ensure clearances are within factory specs.	I agree and I acknowledge
	#6.5	Hone to remove glaze or minor scoring.	I agree and I acknowledge
	#6.6	Replace and assemble parts that damaged or out of tolerance.	I agree and I acknowledge
	#6.7	Perform any welding as required.	I agree and I acknowledge
	#6.8	Pressure test and cycle to factory specs.	I agree and I acknowledge
	#6.9	Paint: Color and type to be determined.	I agree and I acknowledge
	#6.10	Vendor will be responsible for transporting rebuilt cylinder(s) from its offsite facility to the COS WTEF. Vendor agrees to bear all risks of loss, injury or destruction of items.	I agree and I acknowledge
	#6.10.1	REPORTS: Provide an individual detailed report for each cylinder that was rebuilt. The report shall include a copy of the Pressure Test and Cycle to COS WTEF, and list what services were performed, and list all items, parts, material that were replaced. Report shall be provided with the return of rebuild cylinder.	I agree and I acknowledge
	#6.10.2	Upon request of COS WTEF, Vendor shall return damaged or out of spec parts; else Vendor shall be responsible for all associated disposal costs.	I agree and I acknowledge
	#7	Vendor’s standard delivery time after receipt of request for rebuild. Enter number of calendar days that could be expected from day vendor receives request until delivery rebuilt cylinder to Spokane Solid Waste Disposal, Waste To Energy, 2900 S. Geiger Blvd, Spokane WA, 99224-5400.	14-21 days from request depending on p availability and if chroming is required.
	#8	LIQUIDATED DAMAGES. In the event the bidder is awarded the contract and fails to complete the work within the time limit or any agreed upon time extensions, liquidated damages shall be paid to the City of Spokane in the amount of $0.00 per working day until the work is satisfactorily completed.	I agree and I acknowledge
	#9	As applicable, Safety Data Sheets must be included with Bid. Upload Here	

	#10	If you took exception to above, explain in detail.	Hydraulics Plus INC feels that due to the nature of the services requested in this R provide our Hazard Communication Plan adequate and more broad protections wh conjunction with specific MSDS when rec Hazard Communication Plan is detailed b HYDRAULIC'S PLUS, INC. HAZARD COMMUNICATION PLAN COMPANY PC ensure that information about the danger hazardous chemicals used by Hydraulic's known by all employees, the following ha information program has been establishe employees will participate in the Hazard Communication Program. This written pr available in the main office and in the fro MSDS book, which is located on the shel time clock. CONTAINER LABELING: It is responsibility of the designated safety pe area to verify that all containers received clearly labeled as to contents, note the a hazard warning, and list the name and ac manufacturer. The designated safety per ensure that all secondary containers are either an extra copy of the original manuf or labels that have the appropriate hazar Hydraulics Plus INC will review company procedures once a year and update proc required. MATERIAL SAFETY DATA SHE It is the responsibility of any employee wh new (not previously used; no current MSI chemicals to either pick up the MSDS sh vendor at the time of purchase or bring th to the supervisors attention in order to up maintain the MSDS book. New MSDS's v reviewed for any new or significant healtl information, then passed on to the affecte Copies of all MSDS's are kept in a black on the shelf above the time clock. If you a one, immediately contact the supervisor.
PRICING			
	#1	I understand that the awarded Vendor will be responsible for all related Transportation charges, required for pick-up and delivery of cylinder(s) to and from Spokane Solid Waste Disposal, WTEF, Attn: Shipping and Receiving, 2900 S. Geiger Blvd, Spokane WA, 99224-5400.	I agree and I acknowledge
	#2	STARDARD SHIPPING CHARGES FOR PARTS: I understand that the awarded Vendor will be responsible for all related normal shipping charges.	I agree and I acknowledge

	#3	EXPEDITED SHIPPING CHARGES FOR PARTS: Vendor shall seek any expedited shipping approval from COS WTEF. Approved expedited shipping will be prepaid and add; and listed as a separate line item on invoices. The City reserves the right, upon request, to obtain copies of all approved expediated shipping invoices incurred by vendor during the life of the contract, to include any renewals.	I agree and I acknowledge
	#4	Sales Tax: The City of Spokane is not a tax exempt entity and is therefore obligated to pay sales tax under Washington State law. Sales tax should -- not-- be included in bidder's unit pricing. All submissions shall be tabulated by the City who with the applicable sales tax rate whether that tax shall be charged through the Vendor or paid by the City as use tax	I agree and I acknowledge
	#5	The winning Vendor shall receive a two-year unit priced contract, for an annual not to exceed amount of $100,000. Payment would only be made for actual services requested, performed and accepted, in accordance with the current contract unit pricing.	I agree and I acknowledge
	#6	Quantities listed on the Cylinder Listing, that is located in the “Documents" Tab are for reference only. Actual quantities may be more or less. The City cannot guarantee the actual annual quantities that will need to be rebuilt.	I agree and I acknowledge
	#7	Bidder must complete and upload ‘RFQ 6514-26" Pricing Pages (4 pages)' located in the "Documents" tab. Unit Pricing shall not include tax. Upload Here, or bidder will be considered non-responsive:	Pricing Pages (4 Pages) RFQ 6515-26 U
	#7.1	VENDOR'S MARKUP PERCENTAGE will remain unchanged throughout the life of resulting contract, to include any renewals.	I agree and I acknowledge
	#7.2	The Vendor’s prices shall be firm throughout the first year, January 1, 2027 to December 31, 2027.	I agree and I acknowledge
	#7.3	Pricing Adjustments can be requested on the "anniversary of award" (implied 1/1/20xx) with justification support.	I agree and I acknowledge
	#7.4	Adjustments to pricing shall be the result of increases at the manufacturer's level, incurred after contract commencement date, shall not produce a higher profit margin than that on the original Contract. Clearly identify the items impacted by the increase, and be accompanied by documentation acceptable to Spokane City sufficient to justify the requested increase. Spokane City will be the sole judge as to the acceptability of sources. Acceptance of a request will be at the sole discretion of Spokane City.	I agree and I acknowledge
	#7.5	Approved price adjustments shall remain unchanged for at least 12 months thereafter.	I agree and I acknowledge
	#7.6	Retroactive price increase adjustments will not be considered.	I agree and I acknowledge
	#7.7	Failure to reach agreement on a request for an increase in price(s) can, at the sole option of the City, result in the termination of the Contract.	I agree and I acknowledge

	#8	During the life of the contract, to include any renewals, the Vendor realize any declines at the manufacturer's level, or cost reductions, or enter into pricing agreements with other customers providing greater benefits or lower pricing, the Vendor shall immediately request that an amendment to the Contract to provide similar pricing to the City, if the contract with other customers offers similar usage quantities, and similar conditions impacting pricing. The Vendor shall immediately notify the City of any such contracts entered into by the Vendor. Price decreases may be considered and implemented at any time upon mutual consent of the parties.	I agree and I acknowledge
	#9	ADDITIONAL CYLINDER REBUILDS: Should it be realized at a future point in time by the COS WTEF, at a later point(s) in time, during the life of resulting contract, to include any renewals, that additional cylinder(s) that are not listed on the Cylinder Listing, that is located in the "Documents" Tab, need rebuilt, the City reserves the right to have additional cylinder(s) rebuilt via the awarded contract, at the contract's unit pricing at the applicable future point(s) in time, to ensure the City's needs are met.	I agree and I acknowledge
	#10	If you took exception to above, explain in detail.	
ADDITIONAL DOCUMENTS BIDDER WOULD LIKE TO UPLOAD			
	#1	If you have additional information/documents to submit, upload them here.	
	#2	If you have additional information/documents to submit, upload them here.	
	#3	If you have additional information/documents to submit, upload them here.	
	#4	If you have additional information/documents to submit, upload them here.	
	#5	If you have additional information/documents to submit, upload them here.	
	#6	If you have additional information/documents to submit, upload them here.	

These Four (4) Pages Must Be Completed and Uploaded Into ProcureWare Via Pricing Question #7

BID PRICING PAGES

RFQ 6514-26
OFF SITE REBUILD OF HYDRAULIC AND PNEUMATIC CYLINDERS WITH OEM PARTS - AS NEEDED

BIDDER'S DECLARATION.
The undersigned bidder certifies that it has read and understands the specifications for the above services and agrees to comply with all applicable federal, state and local laws and regulations.

Quantities: Quantities listed on the Cylinder Listing, that is located in the "Documents Tab" are for reference only. Actual quantities may be more or less. The City cannot guarantee the actual annual quantities of that will need to be rebuilt.

The winning Vendor shall receive a two-year, 1/1/2027 through 12/31/2029, unit priced contract, for a not to exceed amount of $200,000. Payment would only be made for actual services requested, performed and accepted, in accordance with the current contract unit pricing. Unit Pricing shall be firm throughout the first year, January 1, 2027 to December 31, 2027, with annual pricing adjustments on the anniversary of the award *(implied 1/1/20xx)* with justification. Contract renewals or extensions shall be initiated at the discretion of the City and subject to mutual agreement. The contract may be extended for three (3) additional one-year contract periods with the total contract period not to exceed five (5) years.

BID OFFER. The price(s) listed in this bid proposal is tendered as an offer to furnish all labor, supervision, administration, organization, reports, materials, tools, construction equipment, transportation, supplies, parts, consumables materials, and other items of work and costs necessary for the proper for the proper execution and completion of the services described in the RFQ 6514-26 bid document, attachments, and any reference specifications. The apparent silence or omission as to any detail of any work to be done or materials to be furnished and required for the proper performance of the services, shall be regarded as meaning that the best general practice is to prevail, and that material and workmanship of the best quality are to be used, and interpretation of the specifications shall be interpreted on this basis. The bidder proposes to do the services at the following price:

January 1, 2027 Through December 31, 2027

Unit Pricing shall be firm throughout the first year (1/1/2027 – 12/31/2027) of the two-year contract period (1/1/2027 – 12/31/2029) with annual with annual pricing adjustments on the anniversary of the award (implied 1/1/20xx) with justification. Contract renewals or extensions shall be initiated at the discretion of the City and subject to mutual agreement. The contract may be extended for three (3) additional one-year contract periods with the total contract period not to exceed five (5) years.

ITB 6514-26 Pricing Page
The City shall issue payment in the applicable amount set forth on the Pricing Pages for actual services requested, performed and accepted
VENDOR'S MARKUP PERCENTAGE FOR PARTS: Will remain unchanged throughout the life of resulting two-year contract, to include any renewals. (An example markup calculation on a $200 part having a 15% would equate to a selling price of $235.29 ($200 / 0.85 = $235.29).
ADDITIONAL CYLINDER REBUILDS: Should it be realized at a future point in time by the COS WTEF, at a later point(s) in time, during the life of resulting contract, to include any renewals, that additional cylinder(s) that are not listed on the Cylinder Listing, that is located in the "Documents" tab, need rebuilt, the City reserves the right to have additional cylinder(s) rebuilt via the awarded contract, at the contract's applicable labor rate, based on cylinder type(s) to be rebuilt, at the applicable future point(s) in time, to ensure the City's needs are met.
TRANSPORTATION COST: Vendor will be responsible for all related Transportation charges, required for pick-up and delivery of cylinder(s) to and from Spokane Solid Waste Disposal, Waste To Energy Facility, 2900 S. Geiger Blvd, Spokane WA, 99224-5400.
STANRDARD SHIPPING CHARGES FOR PARTS: Vendor will be responsible for all related normal shipping charges.
EXPEDITATED SHIPPPING CHARGES FOR PARTS: Vendor shall seek any expedited shipping approval from COS WTEF. Approved expedited shipping will be prepaid and add; and listed as a separate line item on invoices. The City reserves the right, upon request, to obtain copies of all approved expediated shipping invoices incurred by vendor during the life of the contract, to include any renewals.
Evaluation: For evaluation purposes, Bidder's OVERALL ESTIMATED TOTAL ANNUAL LABOR COST to rebuild cylinders will be used.,
Comparative Purposes Only: Bidder's Percentage Markup, Re-Chroming Cost Per Square Inch, and Other Costs would not be included in the evaluation unless they appear to be significantly uncompetitive and could result in unnecessarily high cost to the City.

Description					
Example use of Pricing Sheet:	A	B	C= (A x B)	Hourly Rate	(C x Hrly Rate)
Cylinder Type	Estimated Number of Hours To Rebuild Cylinder Type	Annual Est Qty Of Cylinder Type To Be Rebuilt	Annual Estimated Total Labor Hours Required (Bidder's estimated # hours to rebuild cylinder ***times*** Qty of Cylinders to be rebuilt)	Bidder's Hourly Rate (Inclusive of Operating Expense and Profit) based cylinder type	Estimated Total Annual Labor Cost (Annual Estimated Total *Labor* Hours Required ***times*** Bidder's Hrly Rate)
Bimba 10”x24”x1.75”rod	7	2	14	$110.00	$1,540.00
Lehigh (Double rod cylinder) 4”x12”x2”rod	23	15	345	$110.00	$37,950.00
Kone p/n S 23031610, 3.5”x18”x2”rod	34	9	306	$110.00	$33,660.00
Rexroth REO 8”X30”x4”rod	46	4	184	$110.00	$20,240.00
Rexroth: with Tempisonic Sensor; 4"x35”x3”rod	16.25	1	16.25	$110.00	$1,787.50
Lehigh: with Tempisonic Sensor; 4"x35”x3”rod	16.25	1	16.25	$110.00	$1,787.50
Lehigh Model 0364D, 4”x36”x3”rod	14	1	14	$110.00	$1,540.00
Vickers (with Limit Switches; 250 psi, 4”x15”x1”rod)	7	1	7	$110.00	$770.00
			OVERALL ESTIMATED TOTAL ANNUAL LABOR COST:		$99,275.00

Vendor’s Percentage Markup Above Vendor's Cost for Parts.	20 % Markup Above Vendor’s Cost
Re-Chroming Cost per Square Inch	$ 0.90

Other Costs	**No other costs will be allowed if not listed below.**

List any other cost that could be incurred that is not listed above that could be incurred per cylinder rebuild request	
Other Cost Descriptions	**Cost**
Metal if needed for machining parts.	$ 20% over market price at time of request
	$
	$
	$
	$
	$

ADDENDA.

The undersigned acknowledges receipt of addenda number(s) _____ and agrees that their requirements have been included in this bid proposal.

LIQUIDATED DAMAGES.

In the event the bidder is awarded the contract and fails to complete the work within the time limit or any agreed upon time extensions, liquidated damages shall be paid to the City of Spokane in the amount of $0.00 per working day until the work is satisfactorily completed.

Firm Name: Hydraulics Plus INC.

Signature: Loretta Roberts

Printed /Telephone/Email: 509-536-9464 lroberts@hydraulicsplusinc.com

*Please note that the above estimated hours per cylinder are a worse case estimate and true labor hours may be less and will be based on a per case evaluation.

PARTS LIST

BIMBA GATE CYLINDER 10” x 24” x1.75

Seal Kit (Factory)

Barrel

Rod/ Piston Assy.

Rod Bushing

Rod Boot

Rod

Gland

Base OEM Parts

GRATE CYLINDER (LEHIGH)

Seal Kit

Rod Female

Rod Male

Barrel

Gland Bearings (2)

Rod Scrapers (2)

Scraper Retainers (2)

Scraper Spacers (2)

Piston

Rod Seal Cans (2)

Glands (2)

Mount

Tie rods (4)

Nuts (8)

Rods (2)

CRANE GRAPPLE CYLINDER (KONE)

Seal Kit

Barrel

Base

Base Eye

Base Eye Bearing

Port Blocks (2)

Transfer Tube

Fittings (4)

Rod

Rod Eye

Rod Eye Bushing

Grease zerks (3)

Gland

Piston

EXPELLER CYLINDER (REXROTH)

Seal Kit

Barrel

Piston

Rod

Base & Eye

Base Eye Bearing

Gland

Gland Seal Adapter

Rod Bearing

Gland Studs (8)

Gland Nuts (8)

Bolts (24)

Rod Eye

Rod Eye Bushing (2)

Boot

Grease Zerks (3)

RAM FEEDER, TEMPO SONIC CYLINDER (LEHIGH)

Seal Kit

Barrel

Piston

Rod (Factory)

Base

Base Eye Bearing

Gland

Rod Eye

Rod Eye Bearing

Transfer Tube

Bolts (6)

Studs (6)

Nuts (6)

Tempo sonic Sensor (Factory)

RAM FEEDER TEMPO SONIC CYLINDER (REXROTH)

Seal Kit

Barrel

Piston

Rod (Factory)

Base

Base Eye

Base Eye Bearing

Gland

Rod Eye

Rod Eye Bearing

Transfer Tube

Bolts (6)

Studs (6)

Nuts (6)

Tempo Sonic Sensor (Factory)

ARCH BREAKER CYLINDER (LEHIGH)

Seal Kit

Barrel

Piston

Rod

Base With Eye

Base Eye Bearing

Gland

Transfer Tube

Nylon Guide for Transfer Tube

Shroud

Rod End, Shroud Cap

Barrel End, Shroud Cap

Machine Screws (16)

Grease Zerks (2)

BLAST GATE CYLINDER, VICKERS WITH Limit SWITHES (Air)

Base

Gland

Gland Packing Nut

Mount

Piston

Barrel

Studs (4)

Nuts (4)

Sea; Kit (Factory)

Rod Bearing (Factory)

Rod Scraper (Factory)

Barrel (Factory)

All above OEM

HYDRAULICS PLUS INC

5507 East Broadway Ave.• Spokane Valley WA. 99212• 509-536-9464• lroberts@hydrulicsplusinc.com

QUALIFICATIONS / OEM & DISTRIBUTOR COVER LETTER

RFQ 6514-26 – Cylinder Rebuilding Services

September 23, 2026

To: Procurement / Evaluation Committee
Re: RFQ 6514-26 – Rebuilding of Pneumatic and Hydraulic Cylinders

Dear Evaluation Committee:

Hydraulics Plus Inc. Respectfully submits this letter in response to RFQ 6514-26. We are qualified and prepared to inspect, disassemble, clean, measure, repair, rebuild, test, document, and return to service each cylinder type identified in the Cylinder Listing. Our work will be performed in accordance with applicable OEM requirements, accepted hydraulic and pneumatic cylinder repair practices, and the requirements of the solicitation.

Qualifications. Approximately 39 years of experience in industrial hydraulic and pneumatic cylinder repair/rebuilding. Our capabilities include cylinder teardown and inspection; dimensional inspection; tube/honing and rod inspection; rod repair or replacement; gland, piston, bearing and seal replacement; thread and mounting repair; pressure testing; position-sensor/limit-switch verification; and final inspection/documentation. Our shop is equipped with the following relevant equipment: lathes, mills, honing equipment, pressure test stands.

Cylinder types covered by this qualification statement.

OEM / Brand	Cylinder Identification	Application	Annual Estimated Quantity
Bimba	10" x 24" x 1.75" rod, pneumatic, P/N CYL-A-003365	SDA Slide Gate Cylinder	2 more or less
Lehigh	Double-rod 4" x 12" x 2" rod, hydraulic, BN366 0251A	Grate Cylinder	15 more or less
KONE	P/N S 23031610; 3.5" x 18" x 2" rod, hydraulic	Crane Grapple Cylinder	9 more or less
Rexroth	REO, 8" x 30" x 4" rod, hydraulic	Expeller Cylinder Ram	4 more or less
Rexroth	Tempisonic sensor; 4" x 35" x 3" rod; codes shown in listing: 475?3577, CY250B100/ /0-0900A10/01CGUMX, Z 14437, H09067	Ram Feeder	1 or more; facility owns 6, 4 installed and 2 spare
Lehigh	Tempisonic sensor; 4" x 35" x 3" rod; Model BM370; S/N J003735	Ram Feeder	1 or more; facility owns 1 spare
Lehigh	Model 0364D; 4" x 36" x 3" rod, hydraulic	Arch Breaker	1 or more
Vickers / Eaton	Limit switches; 250 psi; 4" x 15" x 1" rod, pneumatic; TE07HAXD / 1FAL8700 / TEO7HAXD1SFAA288	Blast Gate Cylinder	1 or more

OEMs and intended OEM sources.

Our shop performs cylinder rebuilding using the machining, fabrication, inspection, and repair equipment available in-house. Cylinders are disassembled, inspected, measured, cleaned, repaired, and rebuilt as required. We machine rods and other components in our shop when practical. When specialized processing is required, such as re-chroming of cylinder rods, the work is performed by Mountain Plating in St. Maries, Idaho at 90 Borgman LN. 83861

Our normal practice is to repair or manufacture components whenever practical rather than automatically purchasing new OEM replacement parts. We rarely need to purchase OEM parts. If an OEM or other replacement component is required, the City of Spokane may purchase the part directly when doing so provides a lower cost than our procurement source. We will coordinate any such requirement with the City before proceeding.

This repair approach allows us to utilize existing shop capabilities, minimize unnecessary replacement of serviceable components, and provide cost-effective cylinder rebuilding while maintaining the required function and reliability of the repaired cylinder.

Respectfully submitted,

Loretta Roberts
Hydraulics Plus Inc,

Washington State Department of Revenue

Business Lookup

License Information:

New search Back to results

Entity name: HYDRO-TECH GENERATOR REPAIR PLUS, INC.

Business name: HYDRO-TECH GENERATOR REPAIR PLUS, INC.

Entity type: Profit Corporation

UBI #: 601-983-496

Business ID: 001

Location ID: 0001

Location: Active

Location address: 5507 E BROADWAY AVE
SPOKANE VALLEY WA 99212-0909

Mailing address: 5507 E BROADWAY AVE
SPOKANE VALLEY WA 99212-0909

Excise tax and reseller permit status: Click here

Secretary of State information: Click here

Endorsements

Endorsements held at this location	License #	Count	Details	Status	Expiration date	First issuance date
Spokane General Business - Non-Resident				Active	Sep-30-2027	Jan-17-2017
Spokane Valley General Business				Active	Sep-30-2027	Mar-22-2007

Owners and officers on file with the Department of Revenue

Owners and officers	Title
ROBERTS, LORETTA	

Registered Trade Names

Registered trade names	Status	First issued
HYDRAULICS PLUS INC	Active	Oct-25-2017
HYDRAULICS PLUS INC.	Active	Aug-04-2026
HYDRO-TECH GENERATOR REPAIR PLUS, INC.	Active	Jan-21-2000

The Business Lookup information is updated nightly. Search date and time: 10/6/2026 3:15:57 PM

Contact us

How are we doing?
Take our survey!

Don't see what you expected?
Check if your browser is supported

CERTIFICATE OF LIABILITY INSURANCE

DATE (MM/DD/YYYY): 08/18/2026

THIS CERTIFICATE IS ISSUED AS A MATTER OF INFORMATION ONLY AND CONFERS NO RIGHTS UPON THE CERTIFICATE HOLDER. THIS CERTIFICATE DOES NOT AFFIRMATIVELY OR NEGATIVELY AMEND, EXTEND OR ALTER THE COVERAGE AFFORDED BY THE POLICIES BELOW. THIS CERTIFICATE OF INSURANCE DOES NOT CONSTITUTE A CONTRACT BETWEEN THE ISSUING INSURER(S), AUTHORIZED REPRESENTATIVE OR PRODUCER, AND THE CERTIFICATE HOLDER.

IMPORTANT: If the certificate holder is an ADDITIONAL INSURED, the policy(ies) must have ADDITIONAL INSURED provisions or be endorsed. If SUBROGATION IS WAIVED, subject to the terms and conditions of the policy, certain policies may require an endorsement. A statement on this certificate does not confer rights to the certificate holder in lieu of such endorsement(s).

PRODUCER Sentry Insurance 1800 North Point Drive Stevens Point, WI 54481	**CONTACT NAME:** Sentry Customer Service **PHONE (A/C, No, Ext):** 800-473-6879 **FAX (A/C, No):** 800-514-7191 **EMAIL ADDRESS:** businessproducts_direct@sentry.com
	INSURER(S) AFFORDING COVERAGE — **NAIC#**
	INSURER A : Sentry Insurance Company — 24988
INSURED Hydro-Tech Generator Repair DBA Hydraulics Plus Inc 5507 E Broadway Ave Spokane, WA 99212-0909	**INSURER B :**
	INSURER C :
	INSURER D :
	INSURER E :
	INSURER F :

COVERAGES **CERTIFICATE NUMBER:** 4105864 **REVISION NUMBER:**

THIS IS TO CERTIFY THAT THE POLICIES OF INSURANCE LISTED BELOW HAVE BEEN ISSUED TO THE INSURED NAMED ABOVE FOR THE POLICY PERIOD INDICATED. NOTWITHSTANDING ANY REQUIREMENT, TERM OR CONDITION OF ANY CONTRACT OR OTHER DOCUMENT WITH RESPECT TO WHICH THIS CERTIFICATE MAY BE ISSUED OR MAY PERTAIN, THE INSURANCE AFFORDED BY THE POLICIES DESCRIBED HEREIN IS SUBJECT TO ALL THE TERMS, EXCLUSIONS AND CONDITIONS OF SUCH POLICIES. LIMITS SHOWN MAY HAVE BEEN REDUCED BY PAID CLAIMS.

INSR LTR	TYPE OF INSURANCE	ADDL INSR	SUBR WVD	POLICY NUMBER	POLICY EFF (MM/DD/YYYY)	POLICY EXP (MM/DD/YYYY)	LIMITS	
A	X **COMMERCIAL GENERAL LIABILITY** [ ] CLAIMS-MADE [X] OCCUR GEN'L AGGREGATE LIMIT APPLIES PER: [X] POLICY [ ] PRO-JECT [ ] LOC [ ] OTHER:	X		A0087574008	09/08/2026	09/08/2027	EACH OCCURRENCE DAMAGE TO RENTED PREMISES (Ea occurrence) MED EXP (Any one person) PERSONAL & ADV INJURY GENERAL AGGREGATE PRODUCTS - COMP/OP AGG 	$ 1,000,000 $ 500,000 $ 5,000 $ 1,000,000 $ 3,000,000 $ $
A	**AUTOMOBILE LIABILITY** [ ] ANY AUTO [ ] OWNED AUTOS ONLY [X] SCHEDULED AUTOS [X] HIRED AUTOS ONLY [X] NON-OWNED AUTOS ONLY	X		A0087574005	09/08/2026	09/08/2027	COMBINED SINGLE LIMIT (Ea accident) BODILY INJURY (Per person) BODILY INJURY (Per accident) PROPERTY DAMAGE (Per accident) 	$ 1,000,000 $ $ $ $
A	X **UMBRELLA LIAB** [X] OCCUR X **EXCESS LIAB** [ ] CLAIMS-MADE [ ] DED [ ] RETENTION $			A0087574011	09/08/2026	09/08/2027	EACH OCCURRENCE AGGREGATE 	$ 1,000,000 $ 1,000,000 $
	WORKERS COMPENSATION AND EMPLOYERS' LIABILITY Y / N ANY PROPRIETOR/PARTNER/EXECUTIVE OFFICER/MEMBER EXCLUDED? [ ] **(Mandatory in NH)** If yes, describe under DESCRIPTION OF OPERATIONS below	N / A					[ ] PER STATUTE [ ] OTH-ER E.L. EACH ACCIDENT E.L. DISEASE - EA EMPLOYEE E.L. DISEASE - POLICY LIMIT	 $ $ $
A	**Employment Related Practices Liability**		N / A	A0087574009	09/08/2026	09/08/2027	Limit of Insurance Defense Expense Limit of Insurance	$ 100,000 $
A	**Cyber Liability and Data Breach Response**		N / A	A0087574010	09/08/2026	09/08/2027	Policy Aggregate Limit of Liability Retention	$ 50,000 $ 2,500

DESCRIPTION OF OPERATIONS / LOCATIONS / VEHICLES (ACORD 101, Additional Remarks Schedule, may be attached if more space is required)

CERTIFICATE HOLDER

City of Spokane
808 W Spokane Falls Blvd
Spokane, WA 99201-3333

CANCELLATION

SHOULD ANY OF THE ABOVE DESCRIBED POLICIES BE CANCELLED BEFORE THE EXPIRATION DATE THEREOF, NOTICE WILL BE DELIVERED IN ACCORDANCE WITH THE POLICY PROVISIONS.

AUTHORIZED REPRESENTATIVE

John Hoyland

© 1988-2015 ACORD CORPORATION. All rights reserved.
The ACORD name and logo are registered marks of ACORD

ADDITIONAL REMARKS SCHEDULE

AGENCY		NAMED INSURED
Aaron Bradley		Hydro-Tech Generator Repair DBA Hydraulics Plus Inc
POLICY NUMBER		
A0087574008		
CARRIER	**NAIC CODE**	
Sentry Insurance Company	24988	**EFFECTIVE DATE:** 09/08/2026

ADDITIONAL REMARKS

THIS ADDITIONAL REMARKS FORM IS A SCHEDULE TO ACORD FORM,

FORM NUMBER: ACORD 25 **FORM TITLE:** Certificate of Liability Insurance

© 2008 ACORD CORPORATION. All rights reserved.
The ACORD name and logo are registered marks of ACORD

0cedcaa7-d3c3-469b-b405-ecbd2cf70851 00270200443891027380992013333399

THIS ENDORSEMENT CHANGES THE POLICY. PLEASE READ IT CAREFULLY.

ADDITIONAL INSURED - OWNERS, LESSEES OR CONTRACTORS - SCHEDULED PERSON OR ORGANIZATION

This endorsement modifies insurance provided under the following:

COMMERCIAL GENERAL LIABILITY COVERAGE PART

SCHEDULE

Name Of Additional Insured Person(s) Or Organization(s)	Location(s) Of Covered Operations
City of Spokane	multiple locations per contract with City of Spokane Description: pick up cylinders to take to the shop, repair and then deliver back to the location.
Information required to complete this Schedule, if not shown above, will be shown in the Declarations.	

A. Section II - Who Is An Insured is amended to include as an additional insured the person(s) or organization(s) shown in the Schedule, but only with respect to liability for "bodily injury", "property damage" or "personal and advertising injury" caused, in whole or in part, by:

1. Your acts or omissions; or
2. The acts or omissions of those acting on your behalf;

in the performance of your ongoing operations for the additional insured(s) at the location(s) designated above.

However:

1. The insurance afforded to such additional insured only applies to the extent permitted by law; and
2. If coverage provided to the additional insured is required by a contract or agreement, the insurance afforded to such additional insured will not be broader than that which you are required by the contract or agreement to provide for such additional insured.

B. With respect to the insurance afforded to these additional insureds, the following additional exclusions apply:

This insurance does not apply to "bodily injury" or "property damage" occurring after:

1. All work, including materials, parts or equipment furnished in connection with such work, on the project (other than service, maintenance or repairs) to be performed by or on behalf of the additional insured(s) at the location of the covered operations has been completed; or
2. That portion of "your work" out of which the injury or damage arises has been put to its intended use by any person or organization other than another contractor or subcontractor engaged in performing operations for a principal as a part of the same project.

© Insurance Services Office, Inc., 2018

C. With respect to the insurance afforded to these additional insureds, the following is added to **Section III - Limits Of Insurance:**

If coverage provided to the additional insured is required by a contract or agreement, the most we will pay on behalf of the additional insured is the amount of insurance:

1. Required by the contract or agreement; or

2. Available under the applicable limits of insurance;

whichever is less.

This endorsement shall not increase the applicable limits of insurance.

© Insurance Services Office, Inc., 2018

THIS ENDORSEMENT CHANGES THE POLICY. PLEASE READ IT CAREFULLY.

DESIGNATED INSURED FOR COVERED AUTOS LIABILITY COVERAGE

This endorsement modifies insurance provided under the following:

AUTO DEALERS COVERAGE FORM
BUSINESS AUTO COVERAGE FORM
MOTOR CARRIER COVERAGE FORM

With respect to coverage provided by this endorsement, the provisions of the Coverage Form apply unless modified by this endorsement.

This endorsement identifies person(s) or organization(s) who are "insureds" for Covered Autos Liability Coverage under the Who Is An Insured provision of the Coverage Form. This endorsement does not alter coverage provided in the Coverage Form.

This endorsement changes the policy effective on the inception date of the policy unless another date is indicated below.

Named Insured: Hydro-Tech Generator Repair DBA Hydraulics Plus Inc

Endorsement Effective Date: 09/08/2026

SCHEDULE

Name Of Person(s) Or Organization(s):
City of Spokane

Information required to complete this Schedule, if not shown above, will be shown in the Declarations.

Each person or organization shown in the Schedule is an "insured" for Covered Autos Liability Coverage, but only to the extent that person or organization qualifies as an "insured" under the Who Is An Insured provision contained in Paragraph **A.1.** of Section **II** - Covered Autos Liability Coverage in the Business Auto and Motor Carrier Coverage Forms and Paragraph **D.2.** of Section **I** - Covered Autos Coverages of the Auto Dealers Coverage Form.

© Insurance Services Office, Inc., 2011

STATE OF WASHINGTON

Department of Labor & Industries

Certificate of Workers' Compensation Coverage

October 6, 2026

WA UBI No.	601 983 496
L&I Account ID	563,582-02
Legal Business Name	HYDRO TECH GENERATOR REPAIR PLUS INC
Doing Business As	HYDRAULICS PLUS INC
Workers' Comp Premium Status:	Account is current.
Estimated Workers Reported (See Description Below)	Quarter 2 of Year 2026 "1 to 3 Workers"
Account Representative	Employer Services Help Line, (360) 902-4817
Licensed Contractor?	No

What does "Estimated Workers Reported" mean?

Estimated workers reported represents the number of full time position requiring at least 480 hours of work per calendar quarter. A single 480 hour position may be filled by one person, or several part time workers.

Industrial Insurance Information

Employers report and pay premiums each quarter based on hours of employee work already performed, and are liable for premiums found later to be due. **Industrial insurance accounts have no policy periods, cancellation dates, limitations of coverage or waiver of subrogation** (See RCW 51.12.050 and 51.16.190).

Agenda Sheet for City Council:

Committee: PIES **Date:** 11/10/2026

Committee Agenda type: Reports, Contracts & Claims

Council Meeting Date: 12/02/2026

Date Rec'd	11/3/2026		
Clerk's File #	OPR 2026-0922		
Cross Ref #	OPR 2014-0728		
Project #			
Submitting Dept	SOLID WASTE DISPOSAL	**Bid #**	
Contact Name/Phone	TRACE 509-625-6524	**Requisition #**	REVENUE
Contact E-Mail	TBRADBURN@SPOKANECITY.ORG		
Agenda Item Type	Contract Item		
Council Sponsor(s)	KKLITZKE		
Sponsoring at Administrators Request	NO		
Lease? NO	**Grant Related?** NO	**Public Works?** NO	
Agenda Item Name	INTERLOCAL AGREEMENT WITH THE CITY OF AIRWAY HEIGHTS FOR DISPOSAL		

Agenda Wording

Extension of the current Interlocal Agreement (ILA) with Airway Heights for disposal services at the Waste to Energy Facility through December 31, 2026 and a transition to a new interlocal agreement from January 1, 2027 through December 31, 2031. Annual revenue is approximately $800,000.00 ($4,000,000.00 for five year term).

Summary (Background)

The City of Spokane currently offers disposal services for the City of Airway Heights under OPR 2014-0728, which was a seven (7) year ILA with the option of an additional five (5) year extension, that expires on November 16, 2026. This new agreement extends the terms of the existing ILA to December 31, 2026 and transitions to a new five (5) year agreement from January 1, 2027 through December 31, 2031, with the option of an additional five (5) year renewal. The new agreement establishes a per ton disposal price of $103.00 for 2027, $110.00 for 2028 and an annual CPI adjusted rate for 2029-2031.

What impacts would the proposal have on historically excluded communities?

No impacts are identified. Public works services and projects are designed to serve all citizens and businesses. We strive to offer a consistent level of service to all, to distribute public investment throughout the community and to respond to gaps in services identified in various City plans. We recognize the need to maintain affordability and predictability for all solid waste customers and are committed to being financially and environmentally responsible.

How will data be collected, analyzed, and reported concerning the effect of the program/policy by racial, ethnic, gender identity, national origin, income level, disability, sexual orientation, or other existing disparities?

This routine agreement that is designed to manage costs and continue to provide solid waste services in support of all ratepayers. It will not impact race, gender identity, national origin, income level, disability, sexual orientation or other existing disparities.

How will data be collected regarding the effectiveness of this program, policy, or product to ensure it is the right solution?

Public Works follows the City's established procurement and public works bidding regulations and policies to bring items forward and then uses contract management best practices to ensure desired outcomes and regulatory compliance.

Describe how this proposal aligns with current City Policies, including the Comprehensive Plan, Sustainability Action Plan, Capital Improvement Program, Neighborhood Master Plans, Council Resolutions, and others?

This agreement is consistent with annual budget strategies to provide funding needed for capital improvement projects and to provide continued services in support of all ratepayers.

Council Subcommittee Review

n/a

Fiscal Impact

Approved in Current Year Budget?	YES
Total Cost	$
Current Year Cost	$
Subsequent Year(s) Cost	$

Narrative

This interlocal agreement provides hauler revenue to the Waste to Energy Facility.

Amount		Budget Account
Revenue	$ 4,000,000.00 (for 5 year term)	# 4490-44110-37052-34363
Select	$	#
Select	$	#
Select	$	#
Select	$	#
Select	$	#

Funding Source	N/A
Funding Source Type	Select

Is this funding source sustainable for future years, months, etc?

Expense Occurrence	N/A

Other budget impacts (revenue generating, match requirements, etc.)

Revenue Generating

Approvals		Additional Approvals	
Dept Head	BRADBURN, TRACE	**PURCHASING**	PRINCE, THEA
Division Director	FEIST, MARLENE		
Accounting Manager	ALBIN-MOORE, ANGELA		
Legal	FAIRBORN, KATHERINE		
For the Mayor	PICCOLO, MIKE		

Distribution List

Katherine Miller, kmiller@cawh.org	mdorgan@spokanecity.org
jsalstrom@spokanecity.org	tprince@spokanecity.org

City Clerk's No. OPR 2026-0922

INTERLOCAL AGREEMENT
BETWEEN THE CITY OF AIRWAY HEIGHTS AND THE CITY OF SPOKANE FOR DISPOSAL OF SOLID WASTE

This INTERLOCAL AGREEMENT ("Agreement") is made and entered into by and between the CITY OF SPOKANE, a Washington municipal corporation ("Spokane"), and the CITY OF AIRWAY HEIGHTS, a Washington municipal corporation ("Airway Heights"). Spokane and Airway Heights are each a "Party" and collectively the "Parties." The extension provisions in Section 1.A are effective upon execution of this Agreement; all remaining provisions are effective January 1, 2027 ("Effective Date").

RECITALS

WHEREAS, Spokane owns and operates the Waste to Energy Facility located at 2900 S. Geiger Boulevard, Spokane, Washington, for the processing and disposal of municipal solid waste;

WHEREAS, Spokane and Airway Heights have maintained an interlocal disposal relationship under prior agreements and extensions, including City Clerk's No. OPR 2014-0728, with the current extension scheduled to expire November 16, 2026;

WHEREAS, the Parties desire to extend the existing interlocal disposal agreement through December 31, 2026, with the existing disposal rate and other terms remaining in effect through that date;

WHEREAS, Airway Heights desires to continue delivering municipal solid waste collected by Airway Heights or its authorized solid waste collection service provider to Spokane's Waste to Energy Facility, and Spokane desires to continue accepting such waste subject to the terms of this Agreement;

WHEREAS, the Parties intend this Agreement to supersede and replace the prior interlocal disposal agreement and all amendments, extensions, renewals, or addenda effective January 1, 2027;

WHEREAS, the Parties desire to replace the historical rate formula, including the prior landfill closure/post-closure adjustment methodology, with directly negotiated disposal rates for 2027 and 2028 followed by annual CPI-based adjustments beginning in 2029.

NOW, THEREFORE, in consideration of the mutual promises and covenants set forth below, the Parties agree as follows:

SECTION 1. PURPOSE.

A. Transition and Extension of Existing Agreement. Upon execution of this Agreement, the Parties agree to extend the prior interlocal disposal agreement, including City Clerk's No. OPR 2014-0728, and all amendments, extensions, renewals, or addenda thereto through 11:59 p.m. on December 31, 2026. During this extension period, the existing disposal rate and all other terms and conditions of the existing agreement shall remain in full force and effect. At 12:00 a.m. on January 1, 2027, this Agreement shall supersede and replace the existing agreement.

B. This Agreement establishes the terms and conditions under which solid waste collected by Airway Heights, or by an authorized solid waste collection service provider acting on Airway Heights's behalf, may be delivered to Spokane's Waste to Energy Facility for disposal.

C. This Agreement also establishes the treatment of eligible residential self-haul loads originating within Airway Heights and the methodology for adjusting the Airway Heights Disposal Rate.

SECTION 2. DEFINITIONS.

A. "Acceptable Waste" means municipal solid waste that Spokane is authorized and operationally able to receive and process at the WTE under applicable permits, laws, regulations, and facility operating requirements.

B. "Airway Heights" means the City of Airway Heights and, solely for delivery of waste under this Agreement, any solid waste collection service provider authorized by Airway Heights.

C. "Airway Heights Disposal Rate" means the per-ton disposal rate charged for Acceptable Waste delivered by Airway Heights-owned or operated collection vehicles or by an authorized collection service provider acting on Airway Heights's behalf.

D. "Gate Rate" means Spokane's then-current publicly established disposal rate applicable to the type of material delivered to the WTE by self-haul customers.

E. "Hazardous Waste" means dangerous, extremely hazardous, or otherwise regulated waste that Spokane is not authorized to accept as ordinary municipal solid waste.

F. "Non-processible Waste" means waste that Spokane determines cannot be safely or reasonably processed at the WTE under its permits, operating practices, or facility limitations.

G. "Self-Haul" means solid waste delivered directly by members of the public in privately owned or operated vehicles rather than by Airway Heights or Airway Heights's authorized collection service provider.

H. "Solid Waste" means municipal solid waste and other nonhazardous solid waste accepted by Spokane at the WTE, excluding Hazardous Waste and Nonprocessible Waste unless separately approved by Spokane.

I. "WTE" or "Waste to Energy Facility" means Spokane's solid waste facility located at 2900 S. Geiger Boulevard, Spokane, Washington, including the solid waste processing and disposal operations serving the general public.

SECTION 3. DURATION AND TERMINATION.

A. This Agreement shall commence at 12:00 a.m. on January 1, 2027, and shall continue through 11:59 p.m. on December 31, 2031, unless earlier terminated in accordance with this Section.

B. **Renewal.** Upon mutual written agreement of the Parties and approval and execution in accordance with applicable law, this Agreement may be renewed for one (1) additional five-year term. Any renewal must be executed prior to expiration of the then-current term. There is no automatic renewal or extension.

C. Either Party may terminate this Agreement for material breach if the breaching Party fails to cure the breach within thirty (30) days after written notice, or within such longer period as the Parties agree is reasonably necessary to cure.

D. Either Party may terminate this Agreement without cause upon one hundred eighty (180) days' written notice; provided, however, that a termination for convenience shall not become effective before July 1, 2029, unless the Parties mutually agree otherwise in writing.

SECTION 4. DISPOSAL SERVICES.

A. Airway Heights may deliver Acceptable Waste to the WTE using Airway Heights-owned or operated solid waste collection vehicles or an authorized solid waste collection service provider. Once accepted and delivered to the WTE, Spokane shall be responsible for management and processing of the waste in accordance with applicable law and facility requirements.

B. Spokane may inspect, reject, redirect, or require special handling of any load that Spokane reasonably determines contains Hazardous Waste, Non-processible Waste, prohibited material, or material that presents an operational, safety, environmental, or permit concern.

C. **Costs of Unacceptable Waste.** In addition to the Airway Heights Disposal Rate, Airway Heights shall be responsible for reasonable costs incurred by Spokane resulting from prohibited or Non-processible Waste delivered by Airway Heights or its authorized service provider, including costs associated with inspection, testing, special handling, redirection, removal, cleanup, remediation, regulatory response, and disposal.

D. Spokane shall use reasonable efforts to maintain the WTE in good operating condition and to provide disposal capacity for Airway Heights's ordinary municipal solid waste. Nothing in this Agreement guarantees uninterrupted operation during emergencies, outages, force majeure events, permit restrictions, or conditions beyond Spokane's reasonable control.

E. Eligible residential Self-Haul loads originating within Airway Heights may use the WTE subject to Spokane's then-current public acceptance rules, hours, minimum charges, transaction fees, and Gate Rates. Access to household hazardous waste, recycling, yard-waste, or other auxiliary services shall be governed by Spokane's then-current eligibility requirements and operating policies.

F. **Regulatory Cost Adjustment.** If Spokane incurs a material new or increased governmental, environmental, or regulatory compliance cost directly attributable to operation of the WTE, including costs associated with Washington's Climate Commitment Act or a successor program, Spokane may request an equitable adjustment to the Airway Heights Disposal Rate. Spokane shall provide reasonable documentation supporting the adjustment, and the Parties shall meet promptly to determine the appropriate allocation and implementation.

G. Airway Heights use of an authorized solid waste collection service provider shall not relieve Airway Heights of its obligations under this Agreement. Airway Heights shall ensure that each authorized service provider complies with applicable WTE operating, safety, waste-acceptance, and insurance requirements. Airway Heights shall remain responsible for all rates, fees, charges, and other costs incurred by its authorized service provider under this Agreement.

SECTION 5. DISPOSAL RATE, RATE ADJUSTMENTS, BILLING, AND PAYMENT.

A. **Airway Heights Disposal Rate.** The Airway Heights Disposal Rate for Acceptable Waste delivered under this Agreement shall be established as follows:

Effective Period	**Airway Heights Disposal Rate**	**Rate Treatment**
Jan. 1-Dec. 31, 2027	$103.00 per ton	Negotiated transition rate
Jan. 1-Dec. 31, 2028	$110.00 per ton	Negotiated transition rate
Jan. 1, 2029, and each Jan. 1 thereafter	CPI-adjusted	Annual adjustment under Section 5.C

B. **Self-Haul Rate**. Self-Haul customers shall pay Spokane's then-current applicable Gate Rate and any applicable public transaction fee or minimum charge at the time of delivery.

C. **CPI Adjustment Beginning in 2029.** Beginning January 1, 2029, and on each January 1 thereafter during the term, Spokane shall adjust the then-current Airway Heights Disposal Rate to reflect the percentage increase in the United States Department of Labor, Bureau of Labor Statistics, West – Size Class B/C, Consumer Price Index for All Urban Consumers (CPI-U), All Items. The adjustment factor shall be calculated by dividing the August index for the year immediately preceding the adjustment's effective date by the August index for the preceding calendar year. If the index decreases, no rate decrease shall occur. The adjusted rate shall be rounded to the nearest cent per ton.

Illustrative Example. For methodology only, if the applicable CPI increases by 3.00% from the preceding August, the Airway Heights Disposal Rate effective January 1, 2029, would be calculated as follows: $110.00 × 1.0300 = $113.30 per ton. The actual adjustment shall be based on the applicable CPI indices identified above.

D. **Notice of CPI Adjustment.** Spokane shall provide Airway Heights written notice of each annual CPI adjustment as soon as reasonably practicable after publication of the applicable August index and, when practicable, no later than September 30th preceding the January 1 effective date.

E. **Regulatory Cost Reopener.** If Spokane experiences a material new or increased governmental, environmental, or regulatory compliance cost directly attributable to operation of the WTE, including a material cost associated with Washington's Climate Commitment Act or a successor program, Spokane may provide Airway Heights written notice requesting an additional rate adjustment. The notice shall describe the basis for the request and include reasonable supporting information. The Parties shall meet and confer in good faith within thirty (30) days. Any additional adjustment under this subsection must be approved by written amendment to this Agreement.

F. **Taxes and Fees**. The rates stated in this Agreement are disposal rates. Any tax or fee required by law to be separately imposed or stated shall be handled consistent with applicable law and the Parties' then-current billing practice.

G. **Invoicing and Payment.** Spokane shall invoice Airway Heights or its authorized collection service provider for disposal services based on certified scale weights recorded at the WTE. Payment is due within thirty (30) days after the invoice date. Airway Heights shall promptly notify Spokane of any disputed charge and shall timely pay all undisputed amounts.

H. **Billing Questions and Disputes**. The Parties shall work in good faith to resolve billing questions promptly. A dispute concerning an invoice does not excuse timely payment of undisputed amounts.

SECTION 6. AUDIT AND RECORDS.

A. Each Party shall maintain records relating to performance of this Agreement for at least three (3) years after final payment or for any longer period required by applicable law.

B. Upon reasonable notice and during normal business hours, each Party shall provide the other Party reasonable access to records directly related to charges, tonnage, and performance under this Agreement, subject to applicable public records, confidentiality, and retention laws.

C. If a conflict exists between this Section and a mandatory state or federal audit requirement, the mandatory requirement controls.

SECTION 7. LIABILITY AND INDEMNIFICATION.

A. Each Party shall be responsible for the acts and omissions of its own officers, employees, agents, and contractors to the extent provided by law.

B. To the extent a claim, loss, damage, or expense is caused by the concurrent negligence of the Parties, responsibility shall be allocated between the Parties in proportion to their respective degree of fault.

C. Nothing in this Agreement is intended to create liability beyond that imposed by applicable law or to waive any defense, immunity, limitation, or protection available to either Party.

D. The Parties intend this Section to be interpreted consistently with Washington law, including RCW 4.24.115 where applicable.

E. Individually, each Party to this Agreement shall protect, defend, indemnify and save harmless each other Party, its officers, officials, employees and agents from all costs, claims, judgment and/or awards of damages resulting from the negligent acts or omissions of its officers, officials, employees and agents acting with the scope of their employment arising out of or in connection with the performance of the Agreement.

In the event of liability for damages arising out of bodily injury to persons or damages to property caused by or resulting from the concurrent negligence of more than one PARTY, their officers, officials, employees and agents, an individual Party's liability hereunder shall be only to the extent of that Party's negligence.

SECTION 8. INSURANCE.

A. During the term of this Agreement, Each Party or its contracted solid waste collection service provider shall each maintain in force at its own expense, the following insurance coverage or self-insurance:

   i. **Worker's Compensation Insurance** in compliance with RCW 51, which requires subject employers to provide workers' compensation coverage for all their subject workers and Employer's Liability Insurance (Stop Gap) Insurance in the amount of $5,000,000;

ii. **General Liability Insurance** on an occurrence basis, with a combined single limit of not less than $10,000,000 each occurrence for bodily injury and property damage. It shall include contractual liability coverage for the indemnity provided under this Agreement. It shall provide that the City, its officers, and employees are additional insureds, but only with respect to the services contemplated by this Agreement;

iii. **Automobile Liability Insurance** with a combined single limit, or the equivalent, of not less than $5,000,000 each accident for bodily injury and property damage, including coverage for owned, hired and non-owned vehicles; and

iv. **Professional Liability Insurance** with a combined single limit of not less than $5,000,000 each claim, incident or occurrence. This coverage must remain in effect for two (2) years after the Agreement is completed.

v. There shall be no cancellation, material change, reduction of limits or intent not to renew the insurance coverage(s) without providing thirty (30) days written notice from a Party or its insurer(s) to the other Party. Verification of insurance shall be provided upon request. Except with regard to Professional Liability (when required) and Worker's Compensation Insurance, each of the policies shall endorse the City of Spokane as an "Additional Insured" specifically for Airway Heights services under this Contract, as well as all of the parties who are additional insureds, and include applicable policy endorsements, the thirty (30) day cancellation clause, and the deduction or retention level. Airway Heights shall be financially responsible for all pertinent deductibles, self-insured retentions, and/or self-insurance. As evidence of the insurance coverage(s) required by this Agreement, Airway Heights shall furnish acceptable Certificates of Insurance (COI) upon request by the City.

B. Airway Heights shall require any private solid waste collection service provider delivering waste under this Agreement to maintain workers' compensation coverage as required by law and commercial general liability and automobile liability coverage meeting Spokane's then-current risk-management requirements for commercial vehicles accessing the WTE.

SECTION 9. RELATIONSHIP OF THE PARTIES.

The Parties are independent governmental entities. Nothing in this Agreement creates a partnership, joint venture, agency, employment relationship, or separate legal or administrative entity. Neither Party has authority to bind the other except as expressly provided in this Agreement.

SECTION 10. MISCELLANEOUS.

A. **Assignment**. Neither Party may assign or delegate this Agreement, in whole or in part, without the prior written consent of the other Party, except that Airway Heights may use an authorized solid waste collection service provider to perform collection and delivery functions consistent with this Agreement.

B. **Notices**. Notices required under this Agreement shall be in writing and delivered personally, by recognized overnight delivery, by certified mail, or by email with confirmation of receipt to the following offices, or to any successor office designated in writing:

If to Airway Heights	**If to Spokane**
City of Airway Heights Attn: Mayor / City Manager 13120 W 13th Ave Airway Heights, WA 99001 Copy to: Airway Heights City Attorney	City of Spokane Attn: Solid Waste Director 808 W. Spokane Falls Boulevard Spokane, WA 99201 Copy to: Spokane City Attorney 808 W. Spokane Falls Blvd, FL #5

	Spokane, WA 99201

C. **Governing Law and Venue**. This Agreement shall be governed by the laws of the State of Washington. Venue for any court proceeding arising from this Agreement shall be in Spokane County, Washington, unless otherwise required by law.

D. **Dispute Resolution**. Before initiating litigation, the Parties shall first attempt in good faith to resolve any dispute through a meeting of authorized representatives. If the dispute is not resolved, the Parties may pursue any remedy available at law or in equity.

E. **Attorneys' Fees**. Except as otherwise required by law or ordered by a court, each Party shall bear its own attorneys' fees and costs.

F. **Entire Agreement**. This Agreement constitutes the entire agreement between the Parties concerning the subject matter and supersedes prior agreements, negotiations, understandings, and representations concerning the same subject matter.

G. **Third Parties**. This Agreement is for the benefit of the Parties only and does not create any right or benefit in any third party.

H. **Severability**. If any provision of this Agreement is determined to be invalid or unenforceable, the remaining provisions shall remain in effect to the fullest extent permitted by law.

I. **Amendments**. This Agreement may be amended only by a written instrument executed by authorized representatives of both Parties and approved as required by law.

J. **Counterparts and Electronic Signatures**. This Agreement may be executed in counterparts. Electronic and facsimile signatures shall be treated as original signatures to the extent permitted by law.

K. **Authority**. Each person signing this Agreement represents that the person has authority to execute the Agreement on behalf of the Party identified.

L. **Compliance with Laws**. The Parties shall comply with all federal, state, and local laws and regulations applicable to performance of this Agreement.

SECTION 11. INTERLOCAL COOPERATION ACT PROVISIONS.

A. **Purpose**. The purpose of this Agreement is stated in Section 1.

B. **Duration**. The duration of this Agreement is stated in Section 3.

C. **Separate** Entity. No separate legal or administrative entity is created by this Agreement.

D. **Administrator.** For purposes of RCW 39.34.030, the Spokane Solid Waste Director, or designee, shall serve as administrator of this Agreement. The Airway Heights City Administrator, Mayor, or designee shall serve as Airway Heights's administrative liaison. The administrator may coordinate performance, billing, notices, and operational issues but may not amend this Agreement or bind either Party beyond authority otherwise granted by law or this Agreement.

E. **Financing and Budget.** Each Party shall finance its own obligations under this Agreement. Airway Heights shall pay Spokane the rates and charges established in Section 5. No separate joint budget or joint fund is created.

F. **Property**. No joint acquisition of real or personal property is contemplated. Property acquired, held, or used by a Party in performing this Agreement shall remain the property of that Party. Any jointly acquired property must be authorized by a written amendment specifying ownership, custody, and disposition.

G. **Termination and Property Disposition**. Termination is governed by Section 3. Upon termination, each Party retains its own property, records, funds, and other assets, subject to any outstanding payment, record-retention, or other surviving obligations.

H. **Responsibilities of the Parties**. The responsibilities of the Parties are stated throughout this Agreement, including Sections 4 and 5.

I. **Filing / Public Availability**. Before this Agreement enters into force, it shall be filed with the county auditor or listed by subject on a public agency website or other electronically retrievable public source as required by RCW 39.34.040.

J. **Required Governmental Approvals**. This Agreement is subject to approval by the governing bodies of the Parties as required by applicable law. If submission to a state officer or agency is required by RCW 39.34.050, that submission shall occur before the Agreement enters into force.

IN WITNESS WHEREOF, the Parties have executed this Agreement through their duly authorized representatives.

THE CITY OF AIRWAY HEIGHTS	THE CITY OF SPOKANE
_____	_____
Mayor / Authorized Representative	Mayor / Authorized Representative
Date: _____	Date: _____
ATTEST:	**ATTEST:**
_____	_____
City Clerk	City Clerk
APPROVED AS TO FORM:	**APPROVED AS TO FORM:**
_____	_____
City Attorney / Assistant City Attorney	City Attorney / Assistant City Attorney

Agenda Sheet for City Council:

Committee: PIES **Date:** 11/10/2026

Committee Agenda type: Reports, Contracts & Claims

Council Meeting Date: 12/02/2026

Date Rec'd	11/3/2026
Clerk's File #	OPR 2026-0923
Cross Ref #	OPR 2014-0610
Project #	
Bid #	
Requisition #	REVENUE

Submitting Dept	SOLID WASTE DISPOSAL
Contact Name/Phone	TRACE 509-625-6524
Contact E-Mail	TBRADBURN@SPOKANECITY.ORG
Agenda Item Type	Contract Item
Council Sponsor(s)	KKLITZKE
Sponsoring at Administrators Request	NO
Lease? NO	**Grant Related?** NO **Public Works?** NO
Agenda Item Name	INTERLOCAL AGREEMENT WITH THE CITY OF CHENEY FOR DISPOSAL SERVICES

Agenda Wording

Extension of the current Interlocal Agreement (ILA) with the City of Cheney for disposal services at the Waste to Energy Facility through December 31, 2026 and a transition to a new interlocal agreement from January 1, 2027 through December 31, 2031. Annual revenue is approximately $600,000.00 ($3,000,000.00 for five year term).

Summary (Background)

The City of Spokane currently offers disposal services for the City of Cheney under OPR 2014-0610, which was a seven (7) year ILA with the option of an additional five (5) year extension, that expires on November 16, 2026. This new agreement extends the terms of the existing ILA to December 31, 2026 and transitions to a new five (5) year agreement from January 1, 2027 through December 31, 2031, with the option of an additional five (5) year renewal. The new agreement establishes a per ton disposal price of $91.00 for 2027, $97.00 for 2028 and an annual CPI adjusted rate for 2029-2031.

What impacts would the proposal have on historically excluded communities?

No impacts are identified. Public works services and projects are designed to serve all citizens and businesses. We strive to offer a consistent level of service to all, to distribute public investment throughout the community and to respond to gaps in services identified in various City plans. We recognize the need to maintain affordability and predictability for all solid waste customers and are committed to being financially and environmentally responsible.

How will data be collected, analyzed, and reported concerning the effect of the program/policy by racial, ethnic, gender identity, national origin, income level, disability, sexual orientation, or other existing disparities?

This routine agreement is designed to manage costs and continue to provide solid waste services in support of all ratepayers. It will not impact race, gender identity, national origin, income level, disability, sexual orientation or other existing disparities.

How will data be collected regarding the effectiveness of this program, policy, or product to ensure it is the right solution?

Public Works follows the City's established procurement and public works bidding regulations and policies to bring items forward and then uses contract management best practices to ensure desired outcomes and regulatory compliance.

Describe how this proposal aligns with current City Policies, including the Comprehensive Plan, Sustainability Action Plan, Capital Improvement Program, Neighborhood Master Plans, Council Resolutions, and others?

This agreement is consistent with annual budget strategies to provide funding needed for capital improvement projects and to provide continued services in support of all ratepayers.

Council Subcommittee Review

n/a

Fiscal Impact

Approved in Current Year Budget?	YES
Total Cost	$
Current Year Cost	$
Subsequent Year(s) Cost	$

Narrative

This interlocal agreement generates hauler revenue for the Waste to Energy Facility.

Amount		Budget Account
Revenue	$ 3,000,000.00	# 4490-44110-37052-54363
Select	$	#
Select	$	#
Select	$	#
Select	$	#
Select	$	#

Funding Source	N/A
Funding Source Type	Select

Is this funding source sustainable for future years, months, etc?

Yes

Expense Occurrence	N/A

Other budget impacts (revenue generating, match requirements, etc.)

Revenue generating

Approvals		Additional Approvals	
Dept Head	BRADBURN, TRACE	PURCHASING	PRINCE, THEA
Division Director	FEIST, MARLENE		
Accounting Manager	ALBIN-MOORE, ANGELA		
Legal	FAIRBORN, KATHERINE		
For the Mayor	PICCOLO, MIKE		

Distribution List

Dan Ferguson, dferguson@cityofcheney.org	mdorgan@spokanecity.org
jsalstrom@spokanecity.org	tprince@spokanecity.org

INTERLOCAL AGREEMENT
BETWEEN THE CITY OF CHENEY AND THE CITY OF SPOKANE
FOR DISPOSAL OF SOLID WASTE

This INTERLOCAL AGREEMENT ("Agreement") is made and entered into by and between the CITY OF SPOKANE, a Washington municipal corporation ("Spokane"), and the CITY OF CHENEY, a Washington municipal corporation ("Cheney"). Spokane and Cheney are each a "Party" and collectively the "Parties." The extension provisions in Section 1.A are effective upon execution of this Agreement; all remaining provisions are effective January 1, 2027 ("Effective Date").

RECITALS

WHEREAS, Spokane owns and operates the Waste to Energy Facility located at 2900 S. Geiger Boulevard, Spokane, Washington, for the processing and disposal of municipal solid waste;

WHEREAS, Spokane and Cheney have maintained an interlocal disposal relationship under an agreement dated September 12, 2014, and subsequent extensions, with the current extension scheduled to expire November 16, 2026;

WHEREAS, the Parties desire to extend the existing interlocal disposal agreement through December 31, 2026, with the existing disposal rate and other terms remaining in effect through that date;

WHEREAS, Cheney desires to continue delivering municipal solid waste collected by Cheney or its authorized solid waste collection service provider to Spokane's Waste to Energy Facility, and Spokane desires to continue accepting such waste subject to the terms of this Agreement;

WHEREAS, the Parties intend this Agreement to supersede and replace the prior interlocal disposal agreement and all amendments, extensions, renewals, or addenda effective January 1, 2027;

WHEREAS, the Parties have agreed to a two-year transition in Cheney's disposal rate, followed by annual CPI-based adjustments beginning in 2029.

NOW, THEREFORE, in consideration of the mutual promises and covenants set forth below, the Parties agree as follows:

SECTION 1. PURPOSE.

A. **Transition and Extension of Existing Agreement.** Upon execution of this Agreement, the Parties agree to extend the September 12, 2014, interlocal agreement and all amendments, extensions, renewals, or addenda thereto through 11:59 p.m. on December 31, 2026. During this extension period, the existing disposal rate and all other terms and conditions of the existing agreement shall remain in full force and effect. At 12:00 a.m. on January 1, 2027, this Agreement shall supersede and replace the existing agreement.

B. This Agreement establishes the terms and conditions under which solid waste collected by Cheney, or by an authorized solid waste collection service provider acting on Cheney's behalf, may be delivered to Spokane's Waste to Energy Facility for disposal.

C. This Agreement also establishes the treatment of eligible residential self-haul loads originating within Cheney and the methodology for adjusting the Cheney Disposal Rate.

SECTION 2. DEFINITIONS.

A. "Acceptable Waste" means municipal solid waste that Spokane is authorized and operationally able to receive and process at the WTE under applicable permits, laws, regulations, and facility operating requirements.

B. "Cheney" means the City of Cheney and, solely for delivery of waste under this Agreement, any solid waste collection service provider authorized by Cheney.

C. "Cheney Disposal Rate" means the per-ton disposal rate charged for Acceptable Waste delivered by Cheney-owned or operated collection vehicles or by an authorized collection service provider acting on Cheney's behalf.

D. "Gate Rate" means Spokane's then-current publicly established disposal rate applicable to the type of material delivered to the WTE by self-haul customers.

E. "Hazardous Waste" means dangerous, extremely hazardous, or otherwise regulated waste that Spokane is not authorized to accept as ordinary municipal solid waste.

F. "Non-processible Waste" means waste that Spokane determines cannot be safely or reasonably processed at the WTE under its permits, operating practices, or facility limitations.

G. "Self-Haul" means solid waste delivered directly by members of the public in privately owned or operated vehicles rather than by Cheney or Cheney's authorized collection service provider.

H. "Solid Waste" means municipal solid waste and other non-hazardous solid waste accepted by Spokane at the WTE, excluding Hazardous Waste and Non-processible Waste unless separately approved by Spokane.

I. "WTE" or "Waste to Energy Facility" means Spokane's solid waste facility located at 2900 S. Geiger Boulevard, Spokane, Washington, including the solid waste processing and disposal operations serving the general public.

SECTION 3. DURATION AND TERMINATION.

A. This Agreement shall commence at 12:00 a.m. on January 1, 2027, and shall continue through 11:59 p.m. on December 31, 2031, unless earlier terminated in accordance with this Section.

B. **Renewal.** Upon mutual written agreement of the Parties and approval and execution in accordance with applicable law, this Agreement may be renewed for one (1) additional five-year term. Any renewal must be executed prior to expiration of the then-current term. There is no automatic renewal or extension.

C. Either Party may terminate this Agreement for material breach if the breaching Party fails to cure the breach within thirty (30) days after written notice, or within such longer period as the Parties agree is reasonably necessary to cure.

D. Either Party may terminate this Agreement without cause upon one hundred eighty (180) days' written notice; provided, however, that a termination for convenience shall not become effective before July 1, 2029, unless the Parties mutually agree otherwise in writing.

SECTION 4. DISPOSAL SERVICES.

A. Cheney may deliver Acceptable Waste to the WTE using Cheney-owned or operated solid waste collection vehicles or an authorized solid waste collection service provider. Once accepted and delivered to the WTE, Spokane shall be responsible for

management and processing of the waste in accordance with applicable law and facility requirements.

B. Spokane may inspect, reject, redirect, or require special handling of any load that Spokane reasonably determines contains Hazardous Waste, Non-processible Waste, prohibited material, or material that presents an operational, safety, environmental, or permit concern.

C. **Costs of Unacceptable Waste.** In addition to the Cheney Disposal Rate, Cheney shall be responsible for reasonable costs incurred by Spokane resulting from prohibited or Non-processible Waste delivered by Cheney or its authorized service provider, including costs associated with inspection, testing, special handling, redirection, removal, cleanup, remediation, regulatory response, and disposal.

D Spokane shall use reasonable efforts to maintain the WTE in good operating condition and to provide disposal capacity for Cheney's ordinary municipal solid waste. Nothing in this Agreement guarantees uninterrupted operation during emergencies, outages, force majeure events, permit restrictions, or conditions beyond Spokane's reasonable control.

E Eligible residential Self-Haul loads originating within Cheney may use the WTE subject to Spokane's then-current public acceptance rules, hours, minimum charges, transaction fees, and Gate Rates. Access to household hazardous waste, recycling, yard-waste, or other auxiliary services shall be governed by Spokane's then-current eligibility requirements and operating policies.

F. **Regulatory Cost Adjustment.** If Spokane incurs a material new or increased governmental, environmental, or regulatory compliance cost directly attributable to operation of the WTE, including costs associated with Washington’s Climate Commitment Act or a successor program, Spokane may request an equitable adjustment to the Cheney Disposal Rate. Spokane shall provide reasonable documentation supporting the adjustment, and the Parties shall meet promptly to determine the appropriate allocation and implementation.

G. Cheney’s use of an authorized solid waste collection service provider shall not relieve Cheney of its obligations under this Agreement. Cheney shall ensure that each authorized service provider complies with applicable WTE operating, safety, waste-acceptance, and insurance requirements. Cheney shall remain responsible for all

rates, fees, charges, and other costs incurred by its authorized service provider under this Agreement.

SECTION 5. DISPOSAL RATE, RATE ADJUSTMENTS, BILLING, AND PAYMENT.

A. **Cheney Disposal Rate.** The Cheney Disposal Rate for Acceptable Waste delivered under this Agreement shall be established as follows:

Effective Period	Cheney Disposal Rate	Rate Treatment
Jan. 1-Dec. 31, 2027	$91.00 per ton	Negotiated transition rate
Jan. 1-Dec. 31, 2028	$97.00 per ton	Negotiated transition rate
Jan. 1, 2029, and each Jan. 1 thereafter	CPI-adjusted	Annual adjustment under Section 5.C

B. **Self-Haul Rate.** Self-Haul customers shall pay Spokane's then-current applicable Gate Rate and any applicable public transaction fee or minimum charge at the time of delivery.

C. **CPI Adjustment Beginning in 2029.** Beginning January 1, 2029, and on each January 1 thereafter during the term, Spokane shall adjust the then-current Cheney Disposal Rate to reflect the percentage increase in the United States Department of Labor, Bureau of Labor Statistics, West - Size Class B/C, Consumer Price Index for All Urban Consumers (CPI-U), All Items. The adjustment factor shall be calculated by dividing the October index for the just-completed year by the October index for the preceding year. If the index decreases, no rate decrease shall occur. The adjusted rate shall be rounded to the nearest cent per ton.

***Illustrative Example*.** For methodology only, if the applicable CPI increases by 3.00% from the preceding October, the Cheney Disposal Rate effective January 1, 2029 would be calculated as follows: $97.00 x 1.0300 = $99.91 per ton. The actual adjustment shall be based on the applicable CPI indices identified above.

D. **Notice of CPI Adjustment.** Spokane shall provide Cheney written notice of each annual CPI adjustment as soon as reasonably practicable after publication of the applicable October index and, when practicable, no later than December 1 preceding the January 1 effective date.

E. **Regulatory Cost Reopener.** If Spokane experiences a material new or increased governmental, environmental, or regulatory compliance cost directly attributable to operation of the WTE, including a material cost associated with Washington's Climate Commitment Act or a successor program, Spokane may provide Cheney written notice requesting an additional rate adjustment. The notice shall describe the basis for the request and include reasonable supporting information. The Parties shall meet and confer in good faith within thirty (30) days. Any additional adjustment under this subsection must be approved by written amendment to this Agreement.

F. **Taxes and Fees.** The rates stated in this Agreement are disposal rates. Any tax or fee required by law to be separately imposed or stated shall be handled consistent with applicable law and the Parties' then-current billing practice.

G. **Invoicing and Payment.** Spokane shall invoice Cheney or its authorized collection service provider for disposal services based on certified scale weights recorded at the WTE. Payment is due within thirty (30) days after the invoice date. Cheney shall promptly notify Spokane of any disputed charge and shall timely pay all undisputed amounts.

H. **Billing Questions and Disputes.** The Parties shall work in good faith to resolve billing questions promptly. A dispute concerning an invoice does not excuse timely payment of undisputed amounts.

SECTION 6. AUDIT AND RECORDS.

A. Each Party shall maintain records relating to performance of this Agreement for at least three (3) years after final payment or for any longer period required by applicable law.

B. Upon reasonable notice and during normal business hours, each Party shall provide the other Party reasonable access to records directly related to charges, tonnage, and performance under this Agreement, subject to applicable public records, confidentiality, and retention laws.

C. If a conflict exists between this Section and a mandatory state or federal audit requirement, the mandatory requirement controls.

SECTION 7. LIABILITY AND INDEMNIFICATION.

A. Each Party shall be responsible for the acts and omissions of its own officers, employees, agents, and contractors to the extent provided by law.

B. To the extent a claim, loss, damage, or expense is caused by the concurrent negligence of the Parties, responsibility shall be allocated between the Parties in proportion to their respective degree of fault.

C. Nothing in this Agreement is intended to create liability beyond that imposed by applicable law or to waive any defense, immunity, limitation, or protection available to either Party.

D. The Parties intend this Section to be interpreted consistently with Washington law, including RCW 4.24.115 where applicable.

E. Individually, each Party to this Agreement shall protect, defend, indemnify and save harmless each other Party, its officers, officials, employees and agents from all costs, claims, judgment and/or awards of damages resulting from the negligent acts or omissions of its officers, officials, employees and agents acting with the scope of their employment arising out of or in connection with the performance of the Agreement.

In the event of liability for damages arising out of bodily injury to persons or damages to property caused by or resulting from the concurrent negligence of more than one PARTY, their officers, officials, employees and agents, an individual Party's liability hereunder shall be only to the extent of that Party's negligence.

SECTION 8. INSURANCE.

A. During the term of this Agreement, Each Party or its contracted solid waste collection service provider shall each maintain in force at its own expense, the following insurance coverage or self-insurance

   i. **Worker's Compensation Insurance** in compliance with RCW 51, which requires subject employers to provide workers' compensation coverage for all their subject workers and Employer's Liability Insurance (Stop Gap) Insurance in the amount of $5,000,000;

ii. **General Liability Insurance** on an occurrence basis, with a combined single limit of not less than $10,000,000 each occurrence for bodily injury and property damage. It shall include contractual liability coverage for the indemnity provided under this Agreement. It shall provide that the City, its officers, and employees are additional insureds, but only with respect to the services contemplated by this Agreement;

iii. **Automobile Liability Insurance** with a combined single limit, or the equivalent, of not less than $5,000,000 each accident for bodily injury and property damage, including coverage for owned, hired and non-owned vehicles; and

iv. **Professional Liability Insurance** with a combined single limit of not less than $5,000,000 each claim, incident or occurrence. This coverage must remain in effect for two (2) years after the Agreement is completed.

v. There shall be no cancellation, material change, reduction of limits or intent not to renew the insurance coverage(s) without providing thirty (30) days written notice from a Party or its insurer(s) to the other Party. Verification of insurance shall be provided upon request. Except with regard to Professional Liability (when required) and Worker's Compensation Insurance, each of the policies shall endorse the City of Spokane as an "Additional Insured" specifically for Cheney's services under this Contract, as well as all of the parties who are additional insureds, and include applicable policy endorsements, the thirty (30) day cancellation clause, and the deduction or retention level. Cheney shall be financially responsible for all pertinent deductibles, self-insured retentions, and/or self-insurance. As evidence of the insurance coverage(s) required by this Agreement, Cheney shall furnish acceptable Certificates of Insurance (COI) upon request by the City.

B. Cheney shall require any private solid waste collection service provider delivering waste under this Agreement to maintain workers' compensation coverage as required by law and commercial general liability and automobile liability coverage meeting Spokane's then-current risk-management requirements for commercial vehicles accessing the WTE.

SECTION 9. RELATIONSHIP OF THE PARTIES.

The Parties are independent governmental entities. Nothing in this Agreement creates a partnership, joint venture, agency, employment relationship, or separate legal or administrative entity. Neither Party has authority to bind the other except as expressly provided in this Agreement.

SECTION 10. MISCELLANEOUS.

A. **Assignment.** Neither Party may assign or delegate this Agreement, in whole or in part, without the prior written consent of the other Party, except that Cheney may use an authorized solid waste collection service provider to perform collection and delivery functions consistent with this Agreement.

B. **Notices.** Notices required under this Agreement shall be in writing and delivered personally, by recognized overnight delivery, by certified mail, or by email with confirmation of receipt to the following offices, or to any successor office designated in writing:

If to Cheney	**If to Spokane**
City of Cheney Attn: Mayor / City Administrator 609 Second Street Cheney, WA 99004 Copy to: Cheney City Attorney	City of Spokane Attn: Solid Waste Director 808 W. Spokane Falls Boulevard Spokane, WA 99201 Copy to: Spokane City Attorney 808 W. Spokane Falls Blvd, FL #5 Spokane, WA 99201

C. **Governing Law and Venue.** This Agreement shall be governed by the laws of the State of Washington. Venue for any court proceeding arising from this Agreement shall be in Spokane County, Washington, unless otherwise required by law.

D. **Dispute Resolution.** Before initiating litigation, the Parties shall first attempt in good faith to resolve any dispute through a meeting of authorized representatives. If the

dispute is not resolved, the Parties may pursue any remedy available at law or in equity.

E. **Attorneys' Fees.** Except as otherwise required by law or ordered by a court, each Party shall bear its own attorneys' fees and costs.

F. **Entire Agreement.** This Agreement constitutes the entire agreement between the Parties concerning the subject matter and supersedes prior agreements, negotiations, understandings, and representations concerning the same subject matter.

G. **Third Parties.** This Agreement is for the benefit of the Parties only and does not create any right or benefit in any third party.

H. **Severability.** If any provision of this Agreement is determined to be invalid or unenforceable, the remaining provisions shall remain in effect to the fullest extent permitted by law.

I. **Amendments.** This Agreement may be amended only by a written instrument executed by authorized representatives of both Parties and approved as required by law.

J. **Counterparts and Electronic Signatures.** This Agreement may be executed in counterparts. Electronic and facsimile signatures shall be treated as original signatures to the extent permitted by law.

K. **Authority.** Each person signing this Agreement represents that the person has authority to execute the Agreement on behalf of the Party identified.

L. **Compliance with Laws.** The Parties shall comply with all federal, state, and local laws and regulations applicable to performance of this Agreement.

SECTION 11. INTERLOCAL COOPERATION ACT PROVISIONS..

A. **Purpose**. The purpose of this Agreement is stated in Section 1.

B. **Duration**. The duration of this Agreement is stated in Section 3.

C. **Separate Entity**. No separate legal or administrative entity is created by this Agreement.

D. **Administrator**. For purposes of RCW 39.34.030, the Spokane Solid Waste Director, or designee, shall serve as administrator of this Agreement. The Medical Lake City Administrator, Mayor, or designee shall serve as Medical Lake's administrative liaison. The administrator may coordinate performance, billing, notices, and operational issues but may not amend this Agreement or bind either Party beyond authority otherwise granted by law or this Agreement.

E. **Financing and Budget**. Each Party shall finance its own obligations under this Agreement. Medical Lake shall pay Spokane the rates and charges established in Section 5. No separate joint budget or joint fund is created.

F. **Property**. No joint acquisition of real or personal property is contemplated. Property acquired, held, or used by a Party in performing this Agreement shall remain the property of that Party. Any jointly acquired property must be authorized by a written amendment specifying ownership, custody, and disposition.

G. **Termination and Property Disposition**. Termination is governed by Section 3. Upon termination, each Party retains its own property, records, funds, and other assets, subject to any outstanding payment, record-retention, or other surviving obligations.

H. **Responsibilities of the Parties**. The responsibilities of the Parties are stated throughout this Agreement, including Sections 4 and 5.

I. **Filing / Public Availability**. Before this Agreement enters into force, it shall be filed with the Spokane County Auditor or listed by subject on a public agency website or other electronically retrievable public source as required by RCW 39.34.040.

J. **Required Governmental Approvals**. This Agreement is subject to approval by the governing bodies of the Parties as required by applicable law. If submission to a state officer or agency is required by RCW 39.34.050, that submission shall occur before the Agreement enters into force.

IN WITNESS WHEREOF, the Parties have executed this Agreement through their duly authorized representatives.

THE CITY OF CHENEY	**THE CITY OF SPOKANE**
_____	_____
Mayor / Authorized Representative	Mayor / Authorized Representative
Date: _____	Date: _____
ATTEST:	ATTEST:
_____	_____
City Clerk	City Clerk
APPROVED AS TO FORM:	APPROVED AS TO FORM:
_____	_____
City Attorney / Assistant City Attorney	City Attorney / Assistant City Attorney

Docusign Envelope ID: 5D6CDB62-F0F6-8A88-80A6-2EF61D3508E8

City Clerk's No. OPR _____

INTERLOCAL AGREEMENT
BETWEEN THE CITY OF CHENEY AND THE CITY OF SPOKANE
FOR DISPOSAL OF SOLID WASTE

This INTERLOCAL AGREEMENT ("Agreement") is made and entered into by and between the CITY OF SPOKANE, a Washington municipal corporation ("Spokane"), and the CITY OF CHENEY, a Washington municipal corporation ("Cheney"). Spokane and Cheney are each a "Party" and collectively the "Parties." The extension provisions in Section 1.A are effective upon execution of this Agreement; all remaining provisions are effective January 1, 2027 ("Effective Date").

RECITALS

WHEREAS, Spokane owns and operates the Waste to Energy Facility located at 2900 S. Geiger Boulevard, Spokane, Washington, for the processing and disposal of municipal solid waste;

WHEREAS, Spokane and Cheney have maintained an interlocal disposal relationship under an agreement dated September 12, 2014, and subsequent extensions, with the current extension scheduled to expire November 16, 2026;

WHEREAS, the Parties desire to extend the existing interlocal disposal agreement through December 31, 2026, with the existing disposal rate and other terms remaining in effect through that date;

WHEREAS, Cheney desires to continue delivering municipal solid waste collected by Cheney or its authorized solid waste collection service provider to Spokane's Waste to Energy Facility, and Spokane desires to continue accepting such waste subject to the terms of this Agreement;

WHEREAS, the Parties intend this Agreement to supersede and replace the prior interlocal disposal agreement and all amendments, extensions, renewals, or addenda effective January 1, 2027;

WHEREAS, the Parties have agreed to a two-year transition in Cheney's disposal rate, followed by annual CPI-based adjustments beginning in 2029.

Docusign Envelope ID: 5D6CDB62-F0F6-8A88-80A6-2EF61D3508E8

NOW, THEREFORE, in consideration of the mutual promises and covenants set forth below, the Parties agree as follows:

SECTION 1. PURPOSE.

A. **Transition and Extension of Existing Agreement.** Upon execution of this Agreement, the Parties agree to extend the September 12, 2014, interlocal agreement and all amendments, extensions, renewals, or addenda thereto through 11:59 p.m. on December 31, 2026. During this extension period, the existing disposal rate and all other terms and conditions of the existing agreement shall remain in full force and effect. At 12:00 a.m. on January 1, 2027, this Agreement shall supersede and replace the existing agreement.

B. This Agreement establishes the terms and conditions under which solid waste collected by Cheney, or by an authorized solid waste collection service provider acting on Cheney's behalf, may be delivered to Spokane's Waste to Energy Facility for disposal.

C. This Agreement also establishes the treatment of eligible residential self-haul loads originating within Cheney and the methodology for adjusting the Cheney Disposal Rate.

SECTION 2. DEFINITIONS.

A. "Acceptable Waste" means municipal solid waste that Spokane is authorized and operationally able to receive and process at the WTE under applicable permits, laws, regulations, and facility operating requirements.

B. "Cheney" means the City of Cheney and, solely for delivery of waste under this Agreement, any solid waste collection service provider authorized by Cheney.

C. "Cheney Disposal Rate" means the per-ton disposal rate charged for Acceptable Waste delivered by Cheney-owned or operated collection vehicles or by an authorized collection service provider acting on Cheney's behalf.

D. "Gate Rate" means Spokane's then-current publicly established disposal rate applicable to the type of material delivered to the WTE by self-haul customers.

E. "Hazardous Waste" means dangerous, extremely hazardous, or otherwise regulated waste that Spokane is not authorized to accept as ordinary municipal solid waste.

Docusign Envelope ID: 5D6CDB62-F0F6-8A88-80A6-2EF61D3508E8

F. "Non-processible Waste" means waste that Spokane determines cannot be safely or reasonably processed at the WTE under its permits, operating practices, or facility limitations.

G. "Self-Haul" means solid waste delivered directly by members of the public in privately owned or operated vehicles rather than by Cheney or Cheney's authorized collection service provider.

H. "Solid Waste" means municipal solid waste and other non-hazardous solid waste accepted by Spokane at the WTE, excluding Hazardous Waste and Non-processible Waste unless separately approved by Spokane.

I. "WTE" or "Waste to Energy Facility" means Spokane's solid waste facility located at 2900 S. Geiger Boulevard, Spokane, Washington, including the solid waste processing and disposal operations serving the general public.

SECTION 3. DURATION AND TERMINATION.

A. This Agreement shall commence at 12:00 a.m. on January 1, 2027, and shall continue through 11:59 p.m. on December 31, 2031, unless earlier terminated in accordance with this Section.

B. **Renewal.** Upon mutual written agreement of the Parties and approval and execution in accordance with applicable law, this Agreement may be renewed for one (1) additional five-year term. Any renewal must be executed prior to expiration of the then-current term. There is no automatic renewal or extension.

C. Either Party may terminate this Agreement for material breach if the breaching Party fails to cure the breach within thirty (30) days after written notice, or within such longer period as the Parties agree is reasonably necessary to cure.

D. Either Party may terminate this Agreement without cause upon one hundred eighty (180) days' written notice; provided, however, that a termination for convenience shall not become effective before July 1, 2029, unless the Parties mutually agree otherwise in writing.

SECTION 4. DISPOSAL SERVICES.

A. Cheney may deliver Acceptable Waste to the WTE using Cheney-owned or operated solid waste collection vehicles or an authorized solid waste collection service provider. Once accepted and delivered to the WTE, Spokane shall be responsible for

Docusign Envelope ID: 5D6CDB62-F0F6-8A88-80A6-2EF61D3508E8

management and processing of the waste in accordance with applicable law and facility requirements.

B. Spokane may inspect, reject, redirect, or require special handling of any load that Spokane reasonably determines contains Hazardous Waste, Non-processible Waste, prohibited material, or material that presents an operational, safety, environmental, or permit concern.

C. **Costs of Unacceptable Waste.** In addition to the Cheney Disposal Rate, Cheney shall be responsible for reasonable costs incurred by Spokane resulting from prohibited or Non-processible Waste delivered by Cheney or its authorized service provider, including costs associated with inspection, testing, special handling, redirection, removal, cleanup, remediation, regulatory response, and disposal.

D Spokane shall use reasonable efforts to maintain the WTE in good operating condition and to provide disposal capacity for Cheney's ordinary municipal solid waste. Nothing in this Agreement guarantees uninterrupted operation during emergencies, outages, force majeure events, permit restrictions, or conditions beyond Spokane's reasonable control.

E Eligible residential Self-Haul loads originating within Cheney may use the WTE subject to Spokane's then-current public acceptance rules, hours, minimum charges, transaction fees, and Gate Rates. Access to household hazardous waste, recycling, yard-waste, or other auxiliary services shall be governed by Spokane's then-current eligibility requirements and operating policies.

F. **Regulatory Cost Adjustment.** If Spokane incurs a material new or increased governmental, environmental, or regulatory compliance cost directly attributable to operation of the WTE, including costs associated with Washington's Climate Commitment Act or a successor program, Spokane may request an equitable adjustment to the Cheney Disposal Rate. Spokane shall provide reasonable documentation supporting the adjustment, and the Parties shall meet promptly to determine the appropriate allocation and implementation.

G. Cheney's use of an authorized solid waste collection service provider shall not relieve Cheney of its obligations under this Agreement. Cheney shall ensure that each authorized service provider complies with applicable WTE operating, safety, waste-acceptance, and insurance requirements. Cheney shall remain responsible for all

Docusign Envelope ID: 5D6CDB62-F0F6-8A88-80A6-2EF61D3508E8

rates, fees, charges, and other costs incurred by its authorized service provider under this Agreement.

SECTION 5. DISPOSAL RATE, RATE ADJUSTMENTS, BILLING, AND PAYMENT.

A. **Cheney Disposal Rate.** The Cheney Disposal Rate for Acceptable Waste delivered under this Agreement shall be established as follows:

Effective Period	Cheney Disposal Rate	Rate Treatment
Jan. 1-Dec. 31, 2027	$91.00 per ton	Negotiated transition rate
Jan. 1-Dec. 31, 2028	$97.00 per ton	Negotiated transition rate
Jan. 1, 2029, and each Jan. 1 thereafter	CPI-adjusted	Annual adjustment under Section 5.C

B. **Self-Haul Rate.** Self-Haul customers shall pay Spokane's then-current applicable Gate Rate and any applicable public transaction fee or minimum charge at the time of delivery.

C. **CPI Adjustment Beginning in 2029.** Beginning January 1, 2029, and on each January 1 thereafter during the term, Spokane shall adjust the then-current Cheney Disposal Rate to reflect the percentage increase in the United States Department of Labor, Bureau of Labor Statistics, West - Size Class B/C, Consumer Price Index for All Urban Consumers (CPI-U), All Items. The adjustment factor shall be calculated by dividing the October index for the just-completed year by the October index for the preceding year. If the index decreases, no rate decrease shall occur. The adjusted rate shall be rounded to the nearest cent per ton.

Illustrative Example. For methodology only, if the applicable CPI increases by 3.00% from the preceding October, the Cheney Disposal Rate effective January 1, 2029 would be calculated as follows: $97.00 x 1.0300 = $99.91 per ton. The actual adjustment shall be based on the applicable CPI indices identified above.

Docusign Envelope ID: 5D6CDB62-F0F6-8A88-80A6-2EF61D3508E8

D. **Notice of CPI Adjustment.** Spokane shall provide Cheney written notice of each annual CPI adjustment as soon as reasonably practicable after publication of the applicable October index and, when practicable, no later than December 1 preceding the January 1 effective date.

E. **Regulatory Cost Reopener.** If Spokane experiences a material new or increased governmental, environmental, or regulatory compliance cost directly attributable to operation of the WTE, including a material cost associated with Washington's Climate Commitment Act or a successor program, Spokane may provide Cheney written notice requesting an additional rate adjustment. The notice shall describe the basis for the request and include reasonable supporting information. The Parties shall meet and confer in good faith within thirty (30) days. Any additional adjustment under this subsection must be approved by written amendment to this Agreement.

F. **Taxes and Fees.** The rates stated in this Agreement are disposal rates. Any tax or fee required by law to be separately imposed or stated shall be handled consistent with applicable law and the Parties' then-current billing practice.

G. **Invoicing and Payment.** Spokane shall invoice Cheney or its authorized collection service provider for disposal services based on certified scale weights recorded at the WTE. Payment is due within thirty (30) days after the invoice date. Cheney shall promptly notify Spokane of any disputed charge and shall timely pay all undisputed amounts.

H. **Billing Questions and Disputes.** The Parties shall work in good faith to resolve billing questions promptly. A dispute concerning an invoice does not excuse timely payment of undisputed amounts.

SECTION 6. AUDIT AND RECORDS.

A. Each Party shall maintain records relating to performance of this Agreement for at least three (3) years after final payment or for any longer period required by applicable law.

B. Upon reasonable notice and during normal business hours, each Party shall provide the other Party reasonable access to records directly related to charges, tonnage, and performance under this Agreement, subject to applicable public records, confidentiality, and retention laws.

Docusign Envelope ID: 5D6CDB62-F0F6-8A88-80A6-2EF61D3508E8

C. If a conflict exists between this Section and a mandatory state or federal audit requirement, the mandatory requirement controls.

SECTION 7. LIABILITY AND INDEMNIFICATION.

A. Each Party shall be responsible for the acts and omissions of its own officers, employees, agents, and contractors to the extent provided by law.

B. To the extent a claim, loss, damage, or expense is caused by the concurrent negligence of the Parties, responsibility shall be allocated between the Parties in proportion to their respective degree of fault.

C. Nothing in this Agreement is intended to create liability beyond that imposed by applicable law or to waive any defense, immunity, limitation, or protection available to either Party.

D. The Parties intend this Section to be interpreted consistently with Washington law, including RCW 4.24.115 where applicable.

E. Individually, each Party to this Agreement shall protect, defend, indemnify and save harmless each other Party, its officers, officials, employees and agents from all costs, claims, judgment and/or awards of damages resulting from the negligent acts or omissions of its officers, officials, employees and agents acting with the scope of their employment arising out of or in connection with the performance of the Agreement.

In the event of liability for damages arising out of bodily injury to persons or damages to property caused by or resulting from the concurrent negligence of more than one PARTY, their officers, officials, employees and agents, an individual Party's liability hereunder shall be only to the extent of that Party's negligence.

SECTION 8. INSURANCE.

A. During the term of this Agreement, Each Party or its contracted solid waste collection service provider shall each maintain in force at its own expense, the following insurance coverage or self-insurance

   i. **Worker's Compensation Insurance** in compliance with RCW 51, which requires subject employers to provide workers' compensation coverage for all their subject workers and Employer's Liability Insurance (Stop Gap) Insurance in the amount of $5,000,000;

Docusign Envelope ID: 5D6CDB62-F0F6-8A88-80A6-2EF61D3508E8

ii. **General Liability Insurance** on an occurrence basis, with a combined single limit of not less than $10,000,000 each occurrence for bodily injury and property damage. It shall include contractual liability coverage for the indemnity provided under this Agreement. It shall provide that the City, its officers, and employees are additional insureds, but only with respect to the services contemplated by this Agreement;

iii. **Automobile Liability Insurance** with a combined single limit, or the equivalent, of not less than $5,000,000 each accident for bodily injury and property damage, including coverage for owned, hired and non-owned vehicles; and

iv. **Professional Liability Insurance** with a combined single limit of not less than $5,000,000 each claim, incident or occurrence. This coverage must remain in effect for two (2) years after the Agreement is completed.

v. There shall be no cancellation, material change, reduction of limits or intent not to renew the insurance coverage(s) without providing thirty (30) days written notice from a Party or its insurer(s) to the other Party. Verification of insurance shall be provided upon request. Except with regard to Professional Liability (when required) and Worker's Compensation Insurance, each of the policies shall endorse the City of Spokane as an "Additional Insured" specifically for Cheney's services under this Contract, as well as all of the parties who are additional insureds, and include applicable policy endorsements, the thirty (30) day cancellation clause, and the deduction or retention level. Cheney shall be financially responsible for all pertinent deductibles, self-insured retentions, and/or self-insurance. As evidence of the insurance coverage(s) required by this Agreement, Cheney shall furnish acceptable Certificates of Insurance (COI) upon request by the City.

B. Cheney shall require any private solid waste collection service provider delivering waste under this Agreement to maintain workers' compensation coverage as required by law and commercial general liability and automobile liability coverage meeting Spokane's then-current risk-management requirements for commercial vehicles accessing the WTE.

Docusign Envelope ID: 5D6CDB62-F0F6-8A88-80A6-2EF61D3508E8

SECTION 9. RELATIONSHIP OF THE PARTIES.

The Parties are independent governmental entities. Nothing in this Agreement creates a partnership, joint venture, agency, employment relationship, or separate legal or administrative entity. Neither Party has authority to bind the other except as expressly provided in this Agreement.

SECTION 10. MISCELLANEOUS.

A. **Assignment.** Neither Party may assign or delegate this Agreement, in whole or in part, without the prior written consent of the other Party, except that Cheney may use an authorized solid waste collection service provider to perform collection and delivery functions consistent with this Agreement.

B. **Notices.** Notices required under this Agreement shall be in writing and delivered personally, by recognized overnight delivery, by certified mail, or by email with confirmation of receipt to the following offices, or to any successor office designated in writing:

If to Cheney	**If to Spokane**
City of Cheney Attn: Mayor / City Administrator 609 Second Street Cheney, WA 99004 Copy to: Cheney City Attorney	City of Spokane Attn: Solid Waste Director 808 W. Spokane Falls Boulevard Spokane, WA 99201 Copy to: Spokane City Attorney 808 W. Spokane Falls Blvd, FL #5 Spokane, WA 99201

C. **Governing Law and Venue.** This Agreement shall be governed by the laws of the State of Washington. Venue for any court proceeding arising from this Agreement shall be in Spokane County, Washington, unless otherwise required by law.

D. **Dispute Resolution.** Before initiating litigation, the Parties shall first attempt in good faith to resolve any dispute through a meeting of authorized representatives. If the

Docusign Envelope ID: 5D6CDB62-F0F6-8A88-80A6-2EF61D3508E8

dispute is not resolved, the Parties may pursue any remedy available at law or in equity.

E. **Attorneys' Fees.** Except as otherwise required by law or ordered by a court, each Party shall bear its own attorneys' fees and costs.

F. **Entire Agreement.** This Agreement constitutes the entire agreement between the Parties concerning the subject matter and supersedes prior agreements, negotiations, understandings, and representations concerning the same subject matter.

G. **Third Parties.** This Agreement is for the benefit of the Parties only and does not create any right or benefit in any third party.

H. **Severability.** If any provision of this Agreement is determined to be invalid or unenforceable, the remaining provisions shall remain in effect to the fullest extent permitted by law.

I. **Amendments.** This Agreement may be amended only by a written instrument executed by authorized representatives of both Parties and approved as required by law.

J. **Counterparts and Electronic Signatures.** This Agreement may be executed in counterparts. Electronic and facsimile signatures shall be treated as original signatures to the extent permitted by law.

K. **Authority.** Each person signing this Agreement represents that the person has authority to execute the Agreement on behalf of the Party identified.

L. **Compliance with Laws.** The Parties shall comply with all federal, state, and local laws and regulations applicable to performance of this Agreement.

SECTION 11. INTERLOCAL COOPERATION ACT PROVISIONS..

A. **Purpose**. The purpose of this Agreement is stated in Section 1.

B. **Duration**. The duration of this Agreement is stated in Section 3.

C. **Separate Entity**. No separate legal or administrative entity is created by this Agreement.

Docusign Envelope ID: 5D6CDB62-F0F6-8A88-80A6-2EF61D3508E8

D. **Administrator**. For purposes of RCW 39.34.030, the Spokane Solid Waste Director, or designee, shall serve as administrator of this Agreement. The Medical Lake City Administrator, Mayor, or designee shall serve as Medical Lake's administrative liaison. The administrator may coordinate performance, billing, notices, and operational issues but may not amend this Agreement or bind either Party beyond authority otherwise granted by law or this Agreement.

E. **Financing and Budget**. Each Party shall finance its own obligations under this Agreement. Medical Lake shall pay Spokane the rates and charges established in Section 5. No separate joint budget or joint fund is created.

F. **Property**. No joint acquisition of real or personal property is contemplated. Property acquired, held, or used by a Party in performing this Agreement shall remain the property of that Party. Any jointly acquired property must be authorized by a written amendment specifying ownership, custody, and disposition.

G. **Termination and Property Disposition**. Termination is governed by Section 3. Upon termination, each Party retains its own property, records, funds, and other assets, subject to any outstanding payment, record-retention, or other surviving obligations.

H. **Responsibilities of the Parties**. The responsibilities of the Parties are stated throughout this Agreement, including Sections 4 and 5.

I. **Filing / Public Availability**. Before this Agreement enters into force, it shall be filed with the Spokane County Auditor or listed by subject on a public agency website or other electronically retrievable public source as required by RCW 39.34.040.

J. **Required Governmental Approvals**. This Agreement is subject to approval by the governing bodies of the Parties as required by applicable law. If submission to a state officer or agency is required by RCW 39.34.050, that submission shall occur before the Agreement enters into force.

IN WITNESS WHEREOF, the Parties have executed this Agreement through their duly authorized representatives.

Docusign Envelope ID: 5D6CDB62-F0F6-8A88-80A6-2EF61D3508E8

THE CITY OF CHENEY

Signed by:
Elsa Martin
E226EF0A6EC940D...

Mayor / Authorized Representative

Date: October 27, 2026

ATTEST:

Signed by:
Shellie Klinkenberg
BBE0A6E4802C4E5...

City Clerk

APPROVED AS TO FORM:

Signed by:
Mike Kapaun
0CC00752FDE34D4...

City Attorney / Assistant City Attorney

THE CITY OF SPOKANE

Mayor / Authorized Representative

Date: _____

ATTEST:

City Clerk

APPROVED AS TO FORM:

City Attorney / Assistant City Attorney

Agenda Sheet for City Council:

Committee: PIES **Date:** 11/10/2026

Committee Agenda type: Reports, Contracts & Claims

Council Meeting Date: 12/02/2026

Date Rec'd	11/3/2026		
Clerk's File #	OPR 2026-0924		
Cross Ref #	OPR 2014-0727		
Project #			
Submitting Dept	SOLID WASTE DISPOSAL	**Bid #**	
Contact Name/Phone	TRACE 509-625-6524	**Requisition #**	REVENUE
Contact E-Mail	TBRADBURN@SPOKANECITY.ORG		
Agenda Item Type	Contract Item		
Council Sponsor(s)	KKLITZKE		
Sponsoring at Administrators Request	NO		
Lease? NO	**Grant Related?** NO	**Public Works?** NO	
Agenda Item Name	INTERLOCAL AGREEMENT WITH CITY OF MEDICAL LAKE FOR DISPOSAL		

Agenda Wording

Extension of the current Interlocal Agreement (ILA) with the City of Medical Lake for disposal services at the Waste to Energy Facility through December 31, 2026 and a transition to a new interlocal agreement from January 1, 2027 through December 31, 2031. Annual revenue is approximately $240,000.00 ($1,200,000.00 for five year term).

Summary (Background)

The City of Spokane currently offers disposal services for the City of Cheney under OPR 2014-0727, which was a seven (7) year ILA with the option of an additional five (5) year extension, that expires on November 16, 2026. This new agreement extends the terms of the existing ILA to December 31, 2026 and transitions to a new five (5) year agreement from January 1, 2027 through December 31, 2031, with the option of an additional five (5) year renewal. The new agreement establishes a per ton disposal price of $104.00 for 2027, $111.00 for 2028 and an annual CPI adjusted rate for 2029-2031.

What impacts would the proposal have on historically excluded communities?

No impacts are identified. Public works services and projects are designed to serve all citizens and businesses. We strive to offer a consistent level of service to all, to distribute public investment throughout the community and to respond to gaps in services identified in various City plans. We recognize the need to maintain affordability and predictability for all solid waste customers and are committed to being financially and environmentally responsible.

How will data be collected, analyzed, and reported concerning the effect of the program/policy by racial, ethnic, gender identity, national origin, income level, disability, sexual orientation, or other existing disparities?

This agreement is designed to manage costs and continue to provide solid waste services in support of all ratepayers. It will not impact race, gender identity, national origin, income level, disability, sexual orientation or other existing disparities.

How will data be collected regarding the effectiveness of this program, policy, or product to ensure it is the right solution?

Public Works follows the City's established procurement and public works bidding regulations and policies to bring items forward and then uses contract management best practices to ensure desired outcomes and regulatory compliance.

Describe how this proposal aligns with current City Policies, including the Comprehensive Plan, Sustainability Action Plan, Capital Improvement Program, Neighborhood Master Plans, Council Resolutions, and others?

This agreement is consistent with annual budget strategies to provide funding needed for capital improvement projects and to provide continued services in support of all ratepayers.

Council Subcommittee Review

n/a

Fiscal Impact

Approved in Current Year Budget?	YES
Total Cost	$
Current Year Cost	$
Subsequent Year(s) Cost	$

Narrative

This agreement generates hauler revenue for the Waste to Energy Facility.

Amount		Budget Account
Revenue	$ 1,200,000.00	# 4490-44110-37052-34363
Select	$	#
Select	$	#
Select	$	#
Select	$	#
Select	$	#

Funding Source	N/A
Funding Source Type	Select

Is this funding source sustainable for future years, months, etc?

Expense Occurrence	N/A

Other budget impacts (revenue generating, match requirements, etc.)

Revenue Generating

Approvals		Additional Approvals	
Dept Head	BRADBURN, TRACE	PURCHASING	PRINCE, THEA
Division Director	FEIST, MARLENE		
Accounting Manager	ALBIN-MOORE, ANGELA		
Legal	FAIRBORN, KATHERINE		
For the Mayor	PICCOLO, MIKE		

Distribution List

Scott Duncan, sduncan@medical-lake.org	mdorgan@spokanecity.org
jsalstrom@spokanecity.org	tprince@spokanecity.org

City Clerk's No. OPR 2026-0924

AMENDED AND RESTATED INTERLOCAL AGREEMENT BETWEEN THE CITY OF MEDICAL LAKE AND THE CITY OF SPOKANE FOR DISPOSAL OF SOLID WASTE

This AMENDED AND RESTATED INTERLOCAL AGREEMENT ("Agreement") is made and entered into by and between the CITY OF SPOKANE, a Washington municipal corporation ("Spokane"), and the CITY OF MEDICAL LAKE, a Washington municipal corporation ("Medical Lake"). Spokane and Medical Lake are each a "Party" and collectively the "Parties."

RECITALS

WHEREAS, Spokane owns and operates the Waste to Energy Facility located at 2900 S. Geiger Boulevard, Spokane, Washington, for the processing and disposal of municipal solid waste; and

WHEREAS, Spokane and Medical Lake have maintained an interlocal disposal relationship under prior agreements and extensions, including City Clerk's No. OPR 2014-0727, with the current extension scheduled to expire November 16, 2026 (“Existing ILDA”); and

WHEREAS, the Parties desire to extend the Existing ILDA through December 31, 2026, with the existing disposal rate and other terms remaining in effect through that date; and

WHEREAS, Medical Lake desires to continue delivering municipal solid waste collected by Medical Lake or its authorized solid waste collection service provider to Spokane's Waste to Energy Facility, and Spokane desires to continue accepting such waste subject to the terms of this Agreement; and

WHEREAS, the Parties intend this Agreement to supersede and replace the Existing ILDA and all amendments, extensions, renewals, or addenda ; and

WHEREAS, the Parties have agreed to directly negotiate disposal rates for 2027 and 2028, followed by annual CPI-based adjustments beginning in 2029.

NOW, THEREFORE, in consideration of the mutual promises and covenants set forth below, the Parties agree as follows:

SECTION 1. PURPOSE.

A. Upon execution of this Agreement, the Parties agree to extend all terms and conditions of the Existing ILDA, including City Clerk's No. OPR 2014-0727, and all amendments, extensions, renewals, or addenda thereto through 11:59 p.m. on December 31, 2026. During this extension period, the existing disposal rate and all other terms and conditions of the Existing ILDA shall remain in full force and effect. At 12:00 a.m. on January 1, 2027, this Agreement shall commence and replace the Existing ILDA.

B. This Agreement establishes the terms and conditions under which solid waste collected by Medical Lake, or by an authorized solid waste collection service provider acting on Medical Lake's behalf, may be delivered to Spokane's Waste to Energy Facility for disposal.

C. This Agreement also establishes the treatment of eligible residential self-haul loads originating within Medical Lake and the methodology for adjusting the Medical Lake Disposal Rate.

SECTION 2. DEFINITIONS.

A. "Acceptable Waste" means municipal solid waste that Spokane is authorized and operationally able to receive and process at the WTE under applicable permits, laws, regulations, and facility operating requirements.

B. "Medical Lake" means the City of Medical Lake and, solely for delivery of waste under this Agreement, any solid waste collection service provider authorized by Medical Lake.

C. "Medical Lake Disposal Rate" means the per-ton disposal rate charged for Acceptable Waste delivered by Medical Lake-owned or operated collection vehicles or by an authorized collection service provider acting on Medical Lake's behalf, and is distinct from the Gate Rate, below.

D. "Gate Rate" means Spokane's then-current publicly established disposal rate applicable to the type of material delivered to the WTE by Self-Haul customers, defined below.

E. "Hazardous Waste" means dangerous, extremely hazardous, or otherwise regulated waste that Spokane is not authorized to accept as ordinary municipal solid waste.

F. "Non-processible Waste" means waste that Spokane determines cannot be safely or reasonably processed at the WTE under its permits, operating practices, or facility limitations.

G. "Self-Haul" means solid waste delivered directly by members of the public in privately owned or operated vehicles rather than by Medical Lake or Medical Lake's authorized collection service provider.

H. "Solid Waste" means municipal solid waste and other nonhazardous solid waste accepted by Spokane at the WTE, excluding Hazardous Waste and Non-processible Waste unless separately approved by Spokane.

I. "WTE" or "Waste to Energy Facility" means Spokane's solid waste facility located at 2900 S. Geiger Boulevard, Spokane, Washington, including the solid waste processing and disposal operations serving the general public.

SECTION 3. DURATION AND TERMINATION.

A. This Agreement shall commence upon signature of all Parties and shall continue through 11:59 p.m. on December 31, 2031, unless earlier terminated in accordance with this Section.

B. **Renewal.** Upon mutual written agreement of the Parties and approval and execution in accordance with applicable law, this Agreement may be renewed for one (1) additional five-year term. Any renewal must be executed prior to expiration of the then-current term. There is no automatic renewal or extension.

C. Either Party may terminate this Agreement for material breach if the breaching Party fails to cure the breach within thirty (30) days after written notice, or within such longer period as the Parties agree is reasonably necessary to cure.

D. Either Party may terminate this Agreement without cause upon one hundred eighty (180) days' written notice; provided, however, that a termination for convenience shall not become effective before July 1, 2029, unless the Parties mutually agree otherwise in writing.

SECTION 4. DISPOSAL SERVICES.

A. Medical Lake may deliver Acceptable Waste to the WTE using Medical Lake-owned or operated solid waste collection vehicles or an authorized solid waste collection service provider. Once accepted and delivered to the WTE, Spokane shall be responsible for management and processing of the waste in accordance with applicable law and facility requirements.

B. Spokane may inspect, reject, redirect, or require special handling of any load that Spokane reasonably determines contains Hazardous Waste, Non-processible Waste, prohibited material, or material that presents an operational, safety, environmental, or permit concern.

C. **Costs of Unacceptable Waste.** In addition to the Medical Lake Disposal Rate, Medical Lake shall be responsible for reasonable costs incurred by Spokane resulting from prohibited or Non-processible Waste delivered by Medical Lake or its authorized service provider, including costs associated with inspection, testing, special handling, redirection, removal, cleanup, remediation, regulatory response, and disposal.

D. Spokane shall use reasonable efforts to maintain the WTE in good operating condition and to provide disposal capacity for Medical Lake's ordinary municipal solid waste. Nothing in this Agreement guarantees uninterrupted operation during emergencies, outages, force majeure events, permit restrictions, or conditions beyond Spokane's reasonable control.

E. Eligible residential Self-Haul loads originating within Medical Lake may use the WTE subject to Spokane's then-current public acceptance rules, hours, minimum charges, transaction fees, and Gate Rates. Access to household hazardous waste, recycling, yard-waste, or other auxiliary services shall be governed by Spokane's then-current eligibility requirements and operating policies.

F. **Regulatory Cost Adjustment.** If Spokane incurs a material new or increased governmental, environmental, or regulatory compliance cost directly attributable to operation of the WTE, including costs associated with Washington's Climate Commitment Act or a successor program, Spokane may request an equitable adjustment to the Medical Lake Disposal Rate. Spokane shall provide reasonable documentation supporting the adjustment, and the Parties shall meet promptly to determine the appropriate allocation and implementation.

G. Medical Lake's use of an authorized solid waste collection service provider shall not relieve Medical Lake of its obligations under this Agreement. Medical Lake shall ensure that each authorized service provider complies with applicable WTE operating, safety, waste-acceptance, and insurance requirements. Medical Lake shall remain responsible for all rates, fees, charges, and other costs incurred by its authorized service provider under this Agreement.

SECTION 5. DISPOSAL RATE, RATE ADJUSTMENTS, BILLING, AND PAYMENT.

A. **Medical Lake Disposal Rate**. The Medical Lake Disposal Rate for Acceptable Waste delivered under this Agreement shall be established as follows:

Effective Period	**Medical Lake Disposal Rate**	**Rate Treatment**
Jan. 1-Dec. 31, 2027	$104.00 per ton	Negotiated transition rate
Jan. 1-Dec. 31, 2028	$111.00 per ton	Negotiated transition rate
Jan. 1, 2029, and each Jan. 1 thereafter	CPI-adjusted	Annual adjustment under Section 5.C

B. **Self-Haul Rate**. Self-Haul customers shall pay Spokane's then-current applicable Gate Rate and any applicable public transaction fee or minimum charge at the time of delivery.

C. **CPI Adjustment**: **Beginning in 2029**. Beginning January 1, 2029, and on each January 1 thereafter during the term, Spokane shall adjust the then-current Medical Lake Disposal Rate to reflect the percentage increase in the United States Department of Labor, Bureau of Labor Statistics, West - Size Class B/C, Consumer Price Index for All Urban Consumers (CPI-U), All Items. The adjustment factor shall be calculated by dividing the October index for the just-completed year by the October index for the preceding year. If the index decreases, no rate decrease shall occur. The adjusted rate shall be rounded to the nearest cent per ton.

Illustrative Example. For methodology only, if the applicable CPI increases by 3.00% from the preceding October, the Medical Lake Disposal Rate effective January 1, 2029, would be calculated as follows: $111.00 x 1.0300 = $114.33 per ton. The actual adjustment shall be based on the applicable CPI indices identified above.

D. **Notice of CPI Adjustment.** Spokane shall provide Medical Lake written notice of each annual CPI adjustment as soon as reasonably practicable after publication of the applicable October index and, when practicable, no later than December 1 preceding the January 1 effective date.

E. **Regulatory Cost Reopener**. If Spokane experiences a material new or increased governmental, environmental, or regulatory compliance cost directly attributable to operation of the WTE, including a material cost associated with Washington's Climate Commitment Act or a successor program, Spokane may provide Medical Lake written notice requesting an additional rate adjustment. The notice shall describe the basis for the request and include reasonable supporting information. The Parties shall meet and confer in good faith within thirty (30) days. Any additional adjustment under this subsection must be approved by written amendment to this Agreement.

F. **Taxes and Fees.** The rates stated in this Agreement are disposal rates. Any tax or fee required by law to be separately imposed or stated shall be handled consistent with applicable law and the Parties' then-current billing practice.

G. **Invoicing and Payment**. Spokane shall invoice Medical Lake or its authorized collection service provider for disposal services based on certified scale weights recorded at the WTE. Payment is due within thirty (30) days after the invoice date. Medical Lake shall promptly notify Spokane of any disputed charge and shall timely pay all undisputed amounts.

H. **Billing Questions and Disputes.** The Parties shall work in good faith to resolve billing questions promptly. A dispute concerning an invoice does not excuse timely payment of undisputed amounts.

SECTION 6. AUDIT AND RECORDS.

A. Each Party shall maintain records relating to performance of this Agreement for at least three (3) years after final payment or for any longer period required by applicable law.

B. Upon reasonable notice and during normal business hours, each Party shall provide the other Party reasonable access to records directly related to charges, tonnage, and performance under this Agreement, subject to applicable public records, confidentiality, and retention laws.

C. If a conflict exists between this Section and a mandatory state or federal audit requirement, the mandatory requirement controls.

SECTION 7. LIABILITY AND INDEMNIFICATION.

A. Each Party shall be responsible for the acts and omissions of its own officers, employees, agents, and contractors to the extent provided by law.

B. To the extent a claim, loss, damage, or expense is caused by the concurrent negligence of the Parties, responsibility shall be allocated between the Parties in proportion to their respective degree of fault.

C. Nothing in this Agreement is intended to create liability beyond that imposed by applicable law or to waive any defense, immunity, limitation, or protection available to either Party.

D. The Parties intend this Section to be interpreted consistently with Washington law, including RCW 4.24.115 where applicable.

E. Individually, each Party to this Agreement shall protect, defend, indemnify and save harmless each other Party, its officers, officials, employees and agents from all costs, claims, judgment and/or awards of damages resulting from the negligent acts or omissions of its officers, officials, employees and agents acting with the scope of their employment arising out of or in connection with the performance of the Agreement.

In the event of liability for damages arising out of bodily injury to persons or damages to property caused by or resulting from the concurrent negligence of more than one PARTY, their officers, officials, employees and agents, an individual Party's liability hereunder shall be only to the extent of that Party's negligence.

SECTION 8. INSURANCE.

A. During the term of this Agreement, Each Party or its contracted solid waste collection service provider shall each maintain in force at its own expense, the following insurance coverage or self-insurance:

   i. **Worker's Compensation Insurance** in compliance with RCW 51, which requires subject employers to provide workers' compensation coverage for all their subject workers and Employer's Liability Insurance (Stop Gap) Insurance in the amount of $5,000,000;

   ii. **General Liability Insurance** on an occurrence basis, with a combined single limit of not less than $10,000,000 each occurrence for bodily injury and property damage. It shall include contractual liability coverage for the indemnity provided under this Agreement. It shall provide that the City, its officers, and employees are additional insureds, but only with respect to the services contemplated by this Agreement;

   iii. **Automobile Liability Insurance** with a combined single limit, or the equivalent, of not less than $5,000,000 each accident for bodily injury and property damage, including coverage for owned, hired and non-owned vehicles; and

iv. **Professional Liability Insurance** with a combined single limit of not less than $5,000,000 each claim, incident or occurrence. This coverage must remain in effect for two (2) years after the Agreement is completed.

v. There shall be no cancellation, material change, reduction of limits or intent not to renew the insurance coverage(s) without providing thirty (30) days written notice from a Party or its insurer(s) to the other Party. Verification of insurance shall be provided upon request. Except with regard to Professional Liability (when required) and Worker's Compensation Insurance, each of the policies shall endorse the City of Spokane as an "Additional Insured" specifically for Medical Lake's services under this Contract, as well as all of the parties who are additional insureds, and include applicable policy endorsements, the thirty (30) day cancellation clause, and the deduction or retention level. Medical Lake shall be financially responsible for all pertinent deductibles, self-insured retentions, and/or self-insurance. As evidence of the insurance coverage(s) required by this Agreement, Medical Lake shall furnish acceptable Certificates of Insurance (COI) upon request by the City.

B. Medical Lake shall require any private solid waste collection service provider delivering waste under this Agreement to maintain workers' compensation coverage as required by law and commercial general liability and automobile liability coverage meeting Spokane's then-current risk-management requirements for commercial vehicles accessing the WTE.

SECTION 9. RELATIONSHIP OF THE PARTIES.

The Parties are independent governmental entities. Nothing in this Agreement creates a partnership, joint venture, agency, employment relationship, or separate legal or administrative entity. Neither Party has authority to bind the other except as expressly provided in this Agreement.

SECTION 10. MISCELLANEOUS.

A. **Assignment**. Neither Party may assign or delegate this Agreement, in whole or in part, without the prior written consent of the other Party, except that Medical Lake may use an authorized solid waste collection service provider to perform collection and delivery functions consistent with this Agreement.

B. **Notices**. Notices required under this Agreement shall be in writing and delivered personally, by recognized overnight delivery, by certified mail, or by email with confirmation of receipt to the following offices, or to any successor office designated in writing:

If to Medical Lake	**If to Spokane**
City of Medical Lake Attn: Mayor / City Administrator P.O. Box 369 Medical Lake, WA 99022-0369 Copy to: Medical Lake City Attorney	City of Spokane Attn: Solid Waste Director 808 W. Spokane Falls Boulevard Spokane, WA 99201 Copy to: Spokane City Attorney 808 W. Spokane Falls Blvd, Fl. #5 Spokane, WA 99201

C. **Governing Law and Venue.** This Agreement shall be governed by the laws of the State of Washington. Venue for any court proceeding arising from this Agreement shall be in Spokane County, Washington, unless otherwise required by law.

D. **Dispute Resolution**. Before initiating litigation, the Parties shall first attempt in good faith to resolve any dispute through a meeting of authorized representatives. If the dispute is not resolved, the Parties may pursue any remedy available at law or in equity.

E. **Attorneys' Fees**. Except as otherwise required by law or ordered by a court, each Party shall bear its own attorneys' fees and costs.

F. **Entire Agreement.** This Agreement constitutes the entire agreement between the Parties concerning the subject matter and supersedes prior agreements, negotiations, understandings, and representations concerning the same subject matter.

G. **Third Parties**. This Agreement is for the benefit of the Parties only and does not create any right or benefit in any third party.

H. **Severability**. If any provision of this Agreement is determined to be invalid or unenforceable, the remaining provisions shall remain in effect to the fullest extent permitted by law.

I. **Amendments**. This Agreement may be amended only by a written instrument executed by authorized representatives of both Parties and approved as required by law.

J. **Counterparts and Electronic Signatures**. This Agreement may be executed in counterparts. Electronic and facsimile signatures shall be treated as original signatures to the extent permitted by law.

K. **Authority**. Each person signing this Agreement represents that the person has authority to execute the Agreement on behalf of the Party identified.

L. **Compliance with Laws**. The Parties shall comply with all federal, state, and local laws and regulations applicable to performance of this Agreement.

SECTION 11. INTERLOCAL COOPERATION ACT PROVISIONS.

A. **Purpose**. The purpose of this Agreement is stated in Section 1.

B. **Duration**. The duration of this Agreement is stated in Section 3.

C. **Separate Entity**. No separate legal or administrative entity is created by this Agreement.

D. **Administrator**. For purposes of RCW 39.34.030, the Spokane Solid Waste Director, or designee, shall serve as administrator of this Agreement. The Medical Lake City Administrator, Mayor, or designee shall serve as Medical Lake's administrative liaison. The administrator may coordinate performance, billing, notices, and operational issues but may not amend this Agreement or bind either Party beyond authority otherwise granted by law or this Agreement.

E. **Financing and Budget**. Each Party shall finance its own obligations under this Agreement. Medical Lake shall pay Spokane the rates and charges established in Section 5. No separate joint budget or joint fund is created.

F. **Property**. No joint acquisition of real or personal property is contemplated. Property acquired, held, or used by a Party in performing this Agreement shall remain the property of that Party. Any jointly acquired property must be authorized by a written amendment specifying ownership, custody, and disposition.

G. **Termination and Property Disposition**. Termination is governed by Section 3. Upon termination, each Party retains its own property, records, funds, and other assets, subject to any outstanding payment, record-retention, or other surviving obligations.

H. **Responsibilities of the Parties**. The responsibilities of the Parties are stated throughout this Agreement, including Sections 4 and 5.

I. **Filing / Public Availability**. Before this Agreement enters into force, it shall be filed with the Spokane County Auditor or listed by subject on a public agency website or other electronically retrievable public source as required by RCW 39.34.040.

J. **Required Governmental Approvals**. This Agreement is subject to approval by the governing bodies of the Parties as required by applicable law. If submission to a state officer or agency is required by RCW 39.34.050, that submission shall occur before the Agreement enters into force.

IN WITNESS WHEREOF, the Parties have executed this Agreement through their duly authorized representatives.

THE CITY OF MEDICAL LAKE	**THE CITY OF SPOKANE**
_____	_____
Mayor / Authorized Representative	Mayor / Authorized Representative
Date: _____	Date: _____

ATTEST:

_____
City Clerk

APPROVED AS TO FORM:

_____
City Attorney / Assistant City Attorney

ATTEST:

_____
City Clerk

APPROVED AS TO FORM:

_____
City Attorney / Assistant City Attorney

Agenda Sheet for City Council:

Committee: PIES **Date:** 11/10/2026

Committee Agenda type: Discussion

Council Meeting Date: 12/02/2026

Date Rec'd	11/4/2026		
Clerk's File #	OPR 2026-0925		
Cross Ref #			
Project #			
Submitting Dept	WATER & HYDROELECTRIC SERVICES	**Bid #**	RFQ 6636-26
Contact Name/Phone	REINER 509-625-7821	**Requisition #**	
Contact E-Mail	RHERSHAW@SPOKANECITY.ORG		
Agenda Item Type	Purchase w/o Contract		
Council Sponsor(s)	KKLITZKE BWILKERSON ZZAPPONE		
Sponsoring at Administrators Request	NO		
Lease? NO	**Grant Related?** NO	**Public Works?** NO	
Agenda Item Name	CLA-VALVE CONTROL PARTS ORDER		

Agenda Wording

Purchase from HD Fowler (Spokane Valley, WA) of Cla-Valve parts for Repair and Maintenance of Pressure Reducing Valves installed in the City of Spokane Water System

Summary (Background)

City of Spokane water department has installed Cla-Valve's for over 32 years in the city's system. Currently we have over 100 PRV Cla-Valves in the system. Buying Cla-Valve parts for repair and maintenance offsets the cost of replacing the Cla-Valves with another manufacturer.

What impacts would the proposal have on historically excluded communities?

Public works services and projects are designed to serve all citizens and businesses. We strive to offer a consistent level of service to all, to distribute public investment throughout the community and to respond to gaps in services identified in various City plans. We recognize the need to maintain affordability and predictability for utility customers and we are committed to delivering work that is both financially and environmentally responsible.

How will data be collected, analyzed, and reported concerning the effect of the program/policy by racial, ethnic, gender identity, national origin, income level, disability, sexual orientation, or other existing disparities?

N/A

How will data be collected regarding the effectiveness of this program, policy, or product to ensure it is the right solution?

Public Works follows the City's established procurement and public works bidding regulations and policies to bring items forward, and then uses contract management best practices to ensure desired outcomes and regulatory compliance.

Describe how this proposal aligns with current City Policies, including the Comprehensive Plan, Sustainability Action Plan, Capital Improvement Program, Neighborhood Master Plans, Council Resolutions, and others?

This work is consistent with annual budget strategies to limit costs and approved projects in the 6-year CIP.

Council Subcommittee Review

Fiscal Impact

Approved in Current Year Budget?	YES
Total Cost	$ 211,536.00 Plus Tax
Current Year Cost	$ 211,536.00 Plus Tax
Subsequent Year(s) Cost	$

Narrative

Reliability of Cla-Valves over other manufactures have proven cost effective, in both low maintenance, and longevity.

Amount		Budget Account
Expense	$ 211,536.00 Plus Tax	# 4100-42440-34148-53210-99999
Select	$	#
Select	$	#
Select	$	#
Select	$	#
Select	$	#

Funding Source	One-Time
Funding Source Type	Program Revenue

Is this funding source sustainable for future years, months, etc?

4100-42440-34148-53210-99999

Expense Occurrence	N/A

Other budget impacts (revenue generating, match requirements, etc.)

Approvals		Additional Approvals	
Dept Head	HOPKINS, LEON	PURCHASING	PRINCE, THEA
Division Director	FEIST, MARLENE		
Accounting Manager	ALBIN-MOORE, ANGELA		
Legal	FAIRBORN, KATHERINE		
For the Mayor	PICCOLO, MIKE		

Distribution List

Josh Alderman josha@hdfowler.com	rhershaw@spokanecity.org
lhopkins@spokanecity.org	csasser@spokanecity.org
rrpenaluna@spokanecity.org	nrussell@spokanecity.org
tprince@spokanecity.org	tlester@spokanecity.org

Committee Agenda Sheet
Public Infrastructure, Environment & Sustainability Committee

Committee Date	11-10-26 12-8-26
Submitting Department	Water & Hydroelectric Services
Contact Name	Reiner Hershaw
Contact Email & Phone	rhershaw@spokanecity.org 509-625-7821
Council Sponsor(s)	Klitzke, Wilkerson, Zappone
Select Agenda Item Type	☒ Consent ☐ Discussion Time Requested:
Agenda Item Name	Cla-Valve Control Parts Order
Proposed Council Action	☐ Approval to proceed to Legislative Agenda ☐ Information Only
Summary (Background) *use the Fiscal Impact box below for relevant financial information	**Summary (Background)** City of Spokane water department has installed Cla-Valve's for over 32 years in the city's system. Currently we have over 100 PRV Cla-Valves in the system. Buying Cla-Valve parts for repair and maintenance offsets the cost of replacing the Cla-Valves with another manufacturer.

Fiscal Impact

Approved in current year budget? ☒ Yes ☐ No ☐ N/A

Total Cost: $211,536.00 Plus Tax

Current year cost: $211,536.00 Plus Tax

Subsequent year(s) cost: Zero

Narrative: : Reliability of Cla-Valves over other manufactures have proven cost effective, in both low maintenance, and longevity.

Funding Source ☒ One-time ☐ Recurring ☐ N/A

Specify funding source: Program revenue

Is this funding source sustainable for future years, months, etc? 4100-42440-34148-53210-99999

Expense Occurrence ☐ One-time ☐ Recurring ☐ N/A

Other budget impacts: (revenue generating, match requirements, etc.)

Operations Impacts (If N/A, please give a brief description as to why)

- What impacts would the proposal have on historically excluded communities?
  Public works services and projects are designed to serve all citizens and businesses. We strive to offer a consistent level of service to all, to distribute public investment throughout the community and to respond to gaps in services identified in various City plans. We recognize the need to maintain affordability and predictability for utility customers and we are committed to delivering work that is both financially and environmentally responsible.

- How will data be collected, analyzed, and reported concerning the effect of the program/policy by racial, ethnic, gender identity, national origin, income level, disability, sexual orientation, or other existing disparities?
  N/A
- How will data be collected regarding the effectiveness of this program, policy, or product to ensure it is the right solution?
  Public Works follows the City's established procurement and public works bidding regulations and policies to bring items forward, and then uses contract management best practices to ensure desired outcomes and regulatory compliance.
- Describe how this proposal aligns with current City Policies, including the Comprehensive Plan, Sustainability Action Plan, Capital Improvement Program, Neighborhood Master Plans, Council Resolutions, and others?
  This work is consistent with annual budget strategies to limit costs and approved projects in the 6-year CIP.

Council Subcommittee Review

- Please provide a summary of council subcommittee review. If not reviewed by a council subcommittee, please explain why not.

Bid Response Summary

Bid Number RFQ 6636-26
Bid Title Cla-Val control valve parts order
Bid Base Currency USD
Due Date Tuesday, November 3, 2026 12:30:00 PM [(UTC-08:00) Pacific Time (US & Canada)]
Bid Status Closed to Bidding
Company H D FOWLER CO
Submitted By JOSH ALDERMAN - Tuesday, November 3, 2026 10:46:45 AM [(UTC-08:00) Pacific Time (US & Canada)]
JOSHA@HDFOWLER.COM 5095688400
Comments

Question Responses

Group	Reference Number	Question	Response
Contact			
	1	Indicate the appropriate point of contact (phone number and email) regarding this quote and placement of order if awarded. If these actions will not be managed by the same person, explicitly specify all relevant contacts.	Josh Alderman
Order Placement/Approval			
	1	This purchase is subject to City Council approval. Approval is anticipated early in November 2026. The City assumes no obligation to purchase until the purchase is approved by Council and a City purchase order is issued.	Understood and Agreed
Award of Contract			
	1	Award of contract or purchase, when made, will be to the Bidder whose Quote/Bid is the most favorable to the Purchaser, taking into consideration price and the other evaluation factors. INTERLOCAL AND STATE CONTRACTS WHERE APPLICABLE WILL BE CONSIDERED AS A QUOTE/BID. Any order resulting from award will be submitted by Purchasing. Unsuccessful Bidders will not automatically be notified of Quote/Bid results.	I agree and acknowledge
General			
	1	Acceptable product makes/models, where specified, must be adhered to. In the absence of specified acceptable products, the listed technical specifications in each product category represent the minimum qualifications for acceptable product. The make/model of products bid may be required at bid submission; if so, the field will be indicated required on the 'Pricing' tab.	Understood and Agreed
	3	Quoted lead times will be considered in award determinations for each category and may supersede lowest unit cost. Where lead times are the same or similar, the lowest responsive, responsible bidder shall prevail.	Understood and Agreed
Product - CLA-VAL Control parts			
	1 REBUILD ASSEMBLIES	Rebuild Assemblies sizes 2"-10"	Understood and Agreed
	2 REPAIR KITS	Repair Kits sizes 2" to 12", shall be stainless steel	Understood and Agreed
	3 Cla-Val Body 100-01 - class 150	Ductile iron body, all stainless-steel internals (seat, trim, internals etc.)	I acknowledge and agree
	4	Additional Parts - Y Strainers, Position indicators, CV flow Control, CRD Springs, CRL-60, CRD 30-300 PSI, Pump control repair Kit.	Understood and Agreed
	4.1	Y-Strainer X44A is 3/8", bronze with stainless steel screen.	I acknowledge
	4.2	Acknowledge that you have read through the Cla-val strainer document in the documents tab, for X44A Y-Strainer	I acknowledge
	5	Delivery time shall be a consideration of awarding this contract. Supplier agrees to deliver release orders in full to the City's warehouse within the specified number of business days ARO (actual number of days must be specified to be determined 'responsive' to this request). This timeline shall be held standard throughout the term of any resulting value blanket and will be used by City personnel to plan restocking orders. If quoting different lead times, please clearly indicate:	45-55 business days

Delivery			
	1	All freight expenses shall be the indicated in your bid response. Pricing on this quote is understood to include all fees associated with delivery of all products.	Understood and Agreed
	2	All product shall be ordered/delivered FOB: Destination to 914 E. North Foothills Dr. Spokane, WA 99207.	Understood and Agreed
	3	Partial deliveries shall be accepted, and any delivery delays must be communicated to the City employee who placed the order *before* the anticipated delivery date. Supplier is responsible for ensuring all deliveries meet promised timelines and for any resulting expenses, such as expedited freight costs. Any stock on hand the city requests be sent by receipt of order, any addition items must be delivered no later than June 1st 2027	Understood and Agreed
	4	Individual items are to be packaged in separate boxes clearly marked as to the type and quantity of enclosed item. Boxed items are to be delivered on pallets.	Understood and Agreed
	5	Whenever possible, product shall be delivered on Tuesdays, Wednesdays, or Thursdays. When delivery dates are specified, the supplier shall make every possible effort to deliver on the requested date or at least on the preferred delivery days in the same week. If product with a specific delivery date will be delayed more than one (1) week, supplier shall be responsible for communicating an updated delivery date to the Purchaser.	Understood and Agreed
	6	The Purchaser's Warehouse is open for deliveries between the hours of 8:00am and 3:00pm on all regular business days (closed weekends).	Understood and Agreed
Additional Items			
	1	The City of Spokane reserves the right to purchase additional items at the quoted price. Supplier agrees to sell at the same price, terms, and conditions.	No
Payment Terms			
	1	Supplier agrees payment shall be made via direct deposit/ACH (except as provided by state law or if paid by credit card) according to net30 terms after receipt of goods ordered. A completed ACH application is required (if not already on file) before a City order will be issued. If the City objects to all or any portion of an invoice, it shall notify the supplier and reserve the right to pay only that portion of the invoice not in dispute. In that event, all parties shall immediate make every effort to settle the disputed amount.	Understood and Agreed
	2	Supplier agrees to accept Visa credit card payment at no additional fee.	No
Sales Tax			
	1	The City of Spokane is not a tax exempt entity and is therefore obligated to pay sales tax under Washington State law. Sales tax should not be included in respondent’s pricing. All submissions shall be tabulated with the applicable sales tax rate whether that tax shall be charged through the supplier or paid by the City as use tax.	Understood and Agreed
Proprietary Information/Public Disclosure			
	1	Materials submitted in response to this competitive procurement shall become the property of the City. All received Proposals shall remain confidential until the award of contract recommendation has been filed with the applicable Council Committee or the City Clerk for City Council action. Thereafter, the Proposals shall be deemed public records as defined in RCW 42.56, “Public Records.” Any information in the Proposal that the Proposer desires to claim as proprietary and thus exempt from disclosure under the provisions of existing state law, shall be clearly designated. Each page claimed to be exempt from disclosure must be clearly identified by the word “Confidential” printed on it. Marking the entire Proposal exempt from disclosure will not be honored. The City will consider a Proposer’s request for exemption from disclosure; however, the City will make a decision predicated upon state law and regulations. If any information is marked as proprietary in the Proposal, it will not be made available until the affected Proposer has been given an opportunity to seek a court injunction against the requested disclosure.	I acknowledge and agree
Interlocal Purchase Agreements			

	1	The City of Spokane has entered into Interlocal Purchase Agreements with other public agencies pursuant to chapter 39.34 RCW. In submitting a response, the Proposer agrees to provide its services to other public agencies at the same contracted price, terms and conditions it is providing to the City of Spokane, contingent upon the Firm's review and approval at the time of a requested contract. . The Firm's right to refuse to enter into a contract with another public agency at the time of request shall be absolute.	I acknowledge and agree
Business Registration Requirement			
	1	Section 8.01.070 of the Spokane Municipal Code states that no person may engage in business with the City without first having obtained and being the holder of a valid annual business registration or temporary business registration as provided in this chapter. The supplier shall be responsible for contacting the State of Washington Business License Services at http://bls.dor.wa.gov or 1-800-451-7985 to obtain a business registration. If the supplier does not believe it is required to obtain a business registration, it may contact the City's Taxes and Licenses Division at 509-625-6070 to request an exemption status determination.	Understood and Agreed
	2	Supplier's Business Registration No.	1790116679
Polychlorinated Biphenyls (PCBs)			
	1	In accordance with SMC 7.06.172(A), respondent certifies the products quoted and to be supplied (to include product packaging) do not contain polychlorinated biphenyls (PCBs). Moreover and consistent with SMC 7.06.172(B), the City of Spokane, at its sole discretion, may require (at no cost to the City) the apparent successful respondent to provide testing data (prior to contract execution or issue of purchase order) from an accredited laboratory or testing facility documenting the proposed products and or product packaging polychlorinated biphenyl levels.	Understood and Agreed
	2	As far as you know, has this product type been tested for PCBs by a WA State accredited lab using EPA Method 1668c (or equivalent as updated)?	No
	3	If so, were PCBs found at a measurable level?	
	4	As far as you know, has this actual product been tested for PCBs by a WA State accredited lab using EPA Method 1668 (or equivalent as updated)?	No
	5	If so, note from whom the results can be obtained.	
	6	Do you have reason to believe the product contains measurable levels of PCBs?	No
	7	Do you have reason to believe the product packaging contains measurable levels of PCBs?	No
Terms & Conditions			
	1	Submission of a bid constitutes acceptance of the Terms & Conditions of this request in accordance with the document so named in the 'Documents' tab.	Understood and Agreed

Pricing Responses

Group	Reference Number	Description	Type	Unit Of Measure	Quantity	Symbol	Title	Unit Price	Ext Base Price	Comment	Make/Model
Product - CLA-VAL Control parts											
	1. CLA-VAL BODY	2" Cla-Val body 100-01-Ductile iron body, stainless steel seat, stainless steel internals, stainless steel trim, threaded ends, class 150 (all stainless steel internals)	Base	Each	2.00	$	USD	$1,582.00	$3,164.00		CLA-VAL 100-01KC, THREADED

	2. CLA-VAL BODY	6" Cla-Val Body 100-01 -Ductile iron body, stainless steel seat, stainless steel internals, stainless steel trim, flanged ends, class 150 (all stainless steel internals)	Base	Each	2.00	$	USD	$13,190.00	$26,380.00		CLA-VAL 100-01KC 150# FLANGED
	3. CLA-VAL BODY	12" Cla-Val Body 100-01- Ductile iron body, stainless steel seat, stainless steel internals, stainless steel trim, flanged ends, class 150 (all stainless steel internals)	Base	Each	1.00	$	USD	$38,230.00	$38,230.00		
	4.	6" and above restrictor fitting 3/8" thread by 3/8" pushback (push connect fittings are for poly pipe)	Base	Each	20.00	$	USD	$93.00	$1,860.00		
	5.	6" and below restrictor fitting 3/8" thread by 3/8" pushback (push connect fittings for poly pipe)	Base	Each	20.00	$	USD	$93.00	$1,860.00		
	6.	CVS-1 (shuttle valve 3/8)	Base	Each	3.00	$	USD	$415.00	$1,245.00		
	7.	cv speed control 3/8"	Base	Each	20.00	$	USD	$337.00	$6,740.00		
	8. x102 flow limiter	x102f flow limiter 4"	Base	Each	1.00	$	USD	$2,120.00	$2,120.00		
	9. x102f flow limiter	x102f flow limiter 8"	Base	Each	1.00	$	USD	$2,250.00	$2,250.00		
	10. x102 flow limiter	x102f flow limiter 10"	Base	Each	1.00	$	USD	$3,615.00	$3,615.00		
	11. x102 flow limiter	x102f flow limiter 12"	Base	Each	1.00	$	USD	$3,615.00	$3,615.00		
	12.	csm-11-a2-2 solenoid control	Base	Each	1.00	$	USD	$2,280.00	$2,280.00		
	13.	csm-11-a2-2 (4way module)	Base	Each	1.00	$	USD	$2,280.00	$2,280.00		
	14.	hytrol 100-01-1072f (reverse flow)	Base	Each	3.00	$	USD	$395.00	$1,185.00		
	15.	Hytrol 100-01-1072f rebuild kit	Base	Each	5.00	$	USD	$305.00	$1,525.00		
	16.	cra (3/8")	Base	Each	3.00	$	USD	$845.00	$2,535.00		
	17.	cra rebuild kit	Base	Each	10.00	$	USD	$239.00	$2,390.00		
	18.	crl60 20-200psi	Base	Each	2.00	$	USD	$799.00	$1,598.00		

	19.	crl60 100-300psi (stock number 20861201j)	Base	Each	1.00	$	USD	$1,086.00	$1,086.00	
	20.	CRL60 100-300psi springs	Base	Each	5.00	$	USD	$115.00	$575.00	
	21.	crl rebuild kits	Base	Each	15.00	$	USD	$165.00	$2,475.00	
	22.	cdc-1 (check valve 3/8")	Base	Each	5.00	$	USD	$159.00	$795.00	
	23.	csc-1 (swing check 3/4")	Base	Each	5.00	$	USD	$202.00	$1,010.00	
	24.	x42n-2 (strainer and needle valve assembly	Base	Each	5.00	$	USD	$310.00	$1,550.00	
	25.	x43 ("Y" pattern strainer)	Base	Each	15.00	$	USD	$131.00	$1,965.00	
	26.	x43n-3 (strainer and needle valve assembly)	Base	Each	5.00	$	USD	$342.00	$1,710.00	no bid, more info needed
	27.	cvc flow check control (210-03)	Base	Each	1.00	$	USD	$1,110.00	$1,110.00	
	28.	81-01 check valve (210-03)	Base	Each	1.00	$	USD	$453.00	$453.00	
	29.	x58b 3/8" restriction tube assembly	Base	Each	3.00	$	USD	$0.0001	$0.00	no bid, more info needed
	30. CRD Springs	2-30psi - part#81594e	Base	Each	10.00	$	USD	$54.00	$540.00	
	31. CRD Springs	15-75psi-part#71884b	Base	Each	10.00	$	USD	$60.00	$600.00	
	32. CRD Springs	30-300psi-part#71885j	Base	Each	10.00	$	USD	$64.00	$640.00	
	33. CRD Springs	crd spring guide-part#71881h	Base	Each	20.00	$	USD	$22.00	$440.00	
	34. CRD Springs	crd Belleville washer-part#7055007e	Base	Each	20.00	$	USD	$4.50	$90.00	
	35. CRD Springs	diaphragm washer-part#71891g	Base	Each	20.00	$	USD	$12.00	$240.00	
	36. REPAIR KITS	6” pump control rebuild kit for 60-73, part #20957465f	Base	Each	5.00	$	USD	$500.00	$2,500.00	
	37. REPAIR KITS	2” repair kit-part#21176608k	Base	Each	10.00	$	USD	$241.00	$2,410.00	
	38. REPAIR KITS	3” repair kit-part#21176604d	Base	Each	10.00	$	USD	$292.00	$2,920.00	
	39. REPAIR KITS	4” repair kit-part#21176605c	Base	Each	10.00	$	USD	$455.00	$4,550.00	
	40. REPAIR KITS	6” repair kit-part#21176606b	Base	Each	10.00	$	USD	$639.00	$6,390.00	
	41. REPAIR KITS	8” repair kit-part#21176607a	Base	Each	10.00	$	USD	$889.00	$8,890.00	
	42. REPAIR KITS	10” repair kit-part#21176610f	Base	Each	10.00	$	USD	$1,360.00	$13,600.00	
	43. REPAIR KITS	12” repair kit-part#21176611e	Base	Each	3.00	$	USD	$1,675.00	$5,025.00	

	44. REBUILD ASSEMBLY	2”-part#21176618h	Base	Each	2.00	$	USD	$605.00	$1,210.00	
	45. REBUILD ASSEMBLY	3”-part#21176620d	Base	Each	2.00	$	USD	$1,360.00	$2,720.00	
	46. REBUILD ASSEMBLY	4”-part#21176621c	Base	Each	2.00	$	USD	$1,520.00	$3,040.00	
	47. REBUILD ASSEMBLY	6”-part#21176622b	Base	Each	2.00	$	USD	$2,390.00	$4,780.00	
	48. REBUILD ASSEMBLY	8”-part#21176623a	Base	Each	2.00	$	USD	$3,905.00	$7,810.00	
	49. 100-01 STAINLESS STEEL VALVE SEAT	2”	Base	Each	2.00	$	USD	$360.00	$720.00	
	50. 100-01 STAINLESS STEEL VALVE SEAT	3”	Base	Each	2.00	$	USD	$600.00	$1,200.00	
	51. 100-01 STAINLESS STEEL VALVE SEAT	4”	Base	Each	2.00	$	USD	$805.00	$1,610.00	
	52. 100-01 STAINLESS STEEL VALVE SEAT	6”	Base	Each	2.00	$	USD	$1,175.00	$2,350.00	
	53. 100-01 STAINLESS STEEL VALVE SEAT	8”	Base	Each	2.00	$	USD	$1,565.00	$3,130.00	
	54. 100-01 STAINLESS STEEL VALVE SEAT	10”	Base	Each	2.00	$	USD	$2,645.00	$5,290.00	
	55. 100-01 STAINLESS STEEL VALVE SEAT	12”	Base	Each	1.00	$	USD	$3,605.00	$3,605.00	
	56. STAINLESS STEEL VALVE SEAT O-RING	2"	Base	Each	5.00	$	USD	$2.50	$12.50	

	57. STAINLESS STEEL VALVE SEAT O-RING	3"		Base	Each	5.00	$	USD	$2.50	$12.50	
	58. STAINLESS STEEL VALVE SEAT O-RING	4"		Base	Each	5.00	$	USD	$3.50	$17.50	
	59. STAINLESS STEEL VALVE SEAT O-RING	6"		Base	Each	5.00	$	USD	$6.00	$30.00	
	60. STAINLESS STEEL VALVE SEAT O-RING	8"		Base	Each	5.00	$	USD	$7.00	$35.00	
	61. STAINLESS STEEL VALVE SEAT O-RING	10"		Base	Each	5.00	$	USD	$12.50	$62.50	
	62. STAINLESS STEEL VALVE SEAT O-RING	12"		Base	Each	5.00	$	USD	$15.00	$75.00	
	63. VALVE SEAT REMOVAL TOOLS	2"		Base	Each	1.00	$	USD	$1,210.00	$1,210.00	
	64. VALVE SEAT REMOVAL TOOLS	3"		Base	Each	1.00	$	USD	$1,720.00	$1,720.00	
	65. VALVE SEAT REMOVAL TOOLS	4"		Base	Each	1.00	$	USD	$2,130.00	$2,130.00	
	66. VALVE SEAT REMOVAL TOOLS	6"		Base	Each	1.00	$	USD	$2,330.00	$2,330.00	
	67. VALVE SEAT REMOVAL TOOLS	8"		Base	Each	1.00	$	USD	$0.0001	$0.00	no bid, not available
	68. VALVE SEAT REMOVAL TOOLS	10"		Base	Each	1.00	$	USD	$0.0001	$0.00	no bid, not available

	69. VALVE SEAT REMOVAL TOOLS	12"	Base	Each	1.00	$	USD	$0.0001	$0.00	no bid, not available
	70	Freight/Delivery Fee	Base	LS	1.00	$	USD	$0.0001	$0.00	Full Freight Allowed
Total Base Bid	$211,536.00									

RFQ 6636-26

Reference Number	Description	UOM	Quantity	H D FOWLER CO	CONSOLIDATED SUPPLY	Ferguson Waterworks
ARO				44-55	55	50
1. CLA-VAL BODY	2" Cla-Val body 100-01-Ductile iron body, stainless steel seat, stainless steel internals, stainless steel trim, threaded ends, class 150 (all stainless steel	Each	2	$3,164.00	$3,132.66	$3,284.90
2. CLA-VAL BODY	6" Cla-Val Body 100-01 -Ductile iron body, stainless steel seat, stainless steel internals, stainless steel trim, flanged ends, class 150 (all	Each	2	$26,380.00	$26,653.08	$27,034.20
3. CLA-VAL BODY	12" Cla-Val Body 100-01-Ductile iron body, stainless steel seat, stainless steel internals, stainless steel trim, flanged ends, class 150 (all	Each	1	$38,230.00	$38,624.49	$38,419.78
4	6" and above restrictor fitting 3/8" thread by 3/8" pushback (push connect fittings are for poly pipe)	Each	20	$1,860.00	$1,936.20	$1,983.80
5	6" and below restrictor fitting 3/8" thread by 3/8" pushback (push connect fittings for poly pipe)	Each	20	$1,860.00	$1,936.20	$1,983.80
6	CVS-1 (shuttle valve 3/8)	Each	3	$1,245.00	$1,256.25	$1,314.54
7	cv speed control 3/8"	Each	20	$6,740.00	$6,896.00	$7,215.80
8. x102 flow limiter	x102f flow limiter 4"	Each	1	$2,120.00	$2,122.68	$2,244.31
9. x102f flow limiter	x102f flow limiter 8"	Each	1	$2,250.00	$2,251.55	$2,380.56
10. x102 flow limiter	x102f flow limiter 10"	Each	1	$3,615.00	$3,614.44	$3,821.54
11. x102 flow limiter	x102f flow limiter 12"	Each	1	$3,615.00	$3,614.44	$3,821.54
12	csm-11-a2-2 solenoid control	Each	1	$2,280.00	$2,234.03	$2,362.03

13	csm-11-a2-2 (4way module)	Each	1	$2,280.00	$2,234.03	$2,362.03
14	hytrol 100-01-1072f (reverse flow)	Each	3	$1,185.00	$1,187.52	$1,242.60
15	Hytrol 100-01-1072f rebuild kit	Each	5	$1,525.00	$1,536.50	$1,607.75
16	cra (3/8")	Each	3	$2,535.00	$2,593.77	$2,714.10
17	cra rebuild kit	Each	10	$2,390.00	$2,406.30	$2,517.90
18	crl60 20-200psi	Each	2	$1,598.00	$1,585.42	$1,658.98
19	crl60 100-300psi (stock number 20861201j)	Each	1	$1,086.00	$1,087.63	$1,149.95
20	CRL60 100-300psi springs	Each	5	$575.00	$572.95	$599.50
21	crl rebuild kits	Each	15	$2,475.00	$2,515.65	$2,632.35
22	cdc-1 (check valve 3/8")	Each	5	$795.00	$786.50	$822.95
23	csc-1 (swing check 3/4")	Each	5	$1,010.00	$1,000.00	$1,046.40
24	x42n-2 (strainer and needle valve assembly	Each	5	$1,550.00	$1,557.30	$1,629.55
25	x43 ("Y" pattern strainer)	Each	15	$1,965.00	$1,968.75	$2,060.10
26	x43n-3 (strainer and needle valve assembly)	Each	5	$1,710.00	$1,729.20	$1,809.40
27	cvc flow check control (210-03)	Each	1	$1,110.00	$1,111.34	$1,175.02
28	81-01 check valve (210-03)	Each	1	$453.00	$448.96	$469.79
29	x58b 3/8" restriction tube assembly	Each	3	$0.00	$0.00	$0.00

30. CRD Springs	2-30psi -part#81594e	Each	10	$540.00	$553.20	$582.40
31. CRD Springs	15-75psi-part#71884b	Each	10	$600.00	$606.40	$638.40
32. CRD Springs	30-300psi-part#71885j	Each	10	$640.00	$649.00	$683.20
33. CRD Springs	crd spring guide-part#71881h	Each	20	$440.00	$446.80	$470.40
34. CRD Springs	crd Belleville washer-part#7055007e	Each	20	$90.00	$89.00	$89.60
35. CRD Springs	diaphragm washer-part#71891g	Each	20	$240.00	$212.80	$224.00
36. REPAIR KITS	6” pump control rebuild kit for 60-73, part #20957465f	Each	5	$2,500.00	$2,505.25	$2,525.25
37. REPAIR KITS	2” repair kit-part#21176608k	Each	10	$2,410.00	$2,406.30	$2,517.90
38. REPAIR KITS	3” repair kit-part#21176604d	Each	10	$2,920.00	$2,958.40	$3,095.60
39. REPAIR KITS	4” repair kit-part#21176605c	Each	10	$4,550.00	$4,645.90	$4,861.40
40. REPAIR KITS	6” repair kit-part#21176606b	Each	10	$6,390.00	$6,541.70	$6,845.20
41. REPAIR KITS	8” repair kit-part#21176607a	Each	10	$8,890.00	$9,166.70	$9,592.00
42. REPAIR KITS	10” repair kit-part#21176610f	Each	10	$13,600.00	$13,866.00	$14,122.50
43. REPAIR KITS	12” repair kit-part#21176611e	Each	3	$5,025.00	$5,137.14	$5,431.47
44. REBUILD ASSEMBLY	2”-part#21176618h	Each	2	$1,210.00	$1,216.68	$1,273.12
45. REBUILD ASSEMBLY	3”-part#21176620d	Each	2	$2,720.00	$2,707.22	$2,862.34
46. REBUILD ASSEMBLY	4”-part#21176621c	Each	2	$3,040.00	$3,072.18	$3,248.20

47. REBUILD ASSEMBLY	6”-part#21176622b	Each	2	$4,780.00	$4,841.20	$5,118.64
48. REBUILD ASSEMBLY	8”-part#21176623a	Each	2	$7,810.00	$7,985.58	$8,133.30
49. 100-01 STAINLESS STEEL VALVE SEAT	2”	Each	2	$720.00	$722.92	$756.46
50. 100-01 STAINLESS STEEL VALVE SEAT	3”	Each	2	$1,200.00	$1,214.60	$1,270.94
51. 100-01 STAINLESS STEEL VALVE SEAT	4”	Each	2	$1,610.00	$1,656.26	$1,079.10
52. 100-01 STAINLESS STEEL VALVE SEAT	6”	Each	2	$2,350.00	$2,395.88	$2,533.16
53. 100-01 STAINLESS STEEL VALVE SEAT	8”	Each	2	$3,130.00	$3,169.08	$3,350.66
54. 100-01 STAINLESS STEEL VALVE SEAT	10”	Each	2	$5,290.00	$5,404.14	$5,713.78
55. 100-01 STAINLESS STEEL VALVE SEAT	12”	Each	1	$3,605.00	$3,701.04	$3,769.50
56. STAINLESS STEEL VALVE SEAT O-RING	2"	Each	5	$12.50	$11.15	$15.00
57. STAINLESS STEEL VALVE SEAT O-RING	3"	Each	5	$12.50	$11.15	$15.00
58. STAINLESS STEEL VALVE SEAT O-RING	4"	Each	5	$17.50	$16.70	$22.50
59. STAINLESS STEEL VALVE SEAT O-RING	6"	Each	5	$30.00	$27.80	$37.50
60. STAINLESS STEEL VALVE SEAT O-RING	8"	Each	5	$35.00	$33.35	$45.00
61. STAINLESS STEEL VALVE SEAT O-RING	10"	Each	5	$62.50	$63.85	$90.00
62. STAINLESS STEEL VALVE SEAT O-RING	12"	Each	5	$75.00	$74.50	$105.00
63. VALVE SEAT REMOVAL TOOLS	2"	Each	1	$1,210.00	$1,201.04	$1,269.85

64. VALVE SEAT REMOVAL TOOLS	3"	Each	1	$1,720.00	$1,724.75	$1,823.57
65. VALVE SEAT REMOVAL TOOLS	4"	Each	1	$2,130.00	$2,154.64	$2,278.10
66. VALVE SEAT REMOVAL TOOLS	6"	Each	1	$2,330.00	$2,358.77	$2,493.92
67. VALVE SEAT REMOVAL TOOLS	8"	Each	1	$0.00	$0.00	$0.00
68. VALVE SEAT REMOVAL TOOLS	10"	Each	1	$0.00	$0.00	$0.00
69. VALVE SEAT REMOVAL TOOLS	12"	Each	1	$0.00	$0.00	$0.00
70	Freight/Delivery Fee	LS	1	$0.00	$0.00	$0.00
Total Extended				$211,536.00	$214,142.91	$220,349.13

License Information:

New search Back to results

Entity name: HD FOWLER COMPANY

Business name: HD FOWLER COMPANY

Entity type: Profit Corporation

UBI #: 179-016-679

Business ID: 001

Location ID: 0009

Location: Active

Location address: 410 N PARK RD
SPOKANE VALLEY WA 99212-1126

Mailing address: 410 N PARK RD
SPOKANE VALLEY WA 99212-1126

Excise tax and reseller permit status: Click here

Secretary of State information: Click here

Endorsements

Endorsements held at this loca	License #	Count	Details	Status	Expiration date	First issuance d
Minor Work Permit				Active	Oct-31-2027	Jun-22-2022
Spokane General Business - Non-Resident				Active	Oct-31-2027	Oct-23-2013
Spokane Valley General Business				Active	Oct-31-2027	Nov-07-2022

Owners and officers on file with the Department of Revenue

Owners and officers	Title
ANTONELLI, CATHERINE	
BAY, MELISSA	
FOWLER, JAMES	

Registered Trade Names

Registered trade names	Status	First issued
HD FOWLER COMPANY	Active	Jan-17-2018

View Additional Locations

The Business Lookup information is updated nightly. Search date and time: 11/3/2026 3:38:03 PM

Contact us

How are we doing?
Take our survey!

Don't see what you expected?
Check if your browser is supported

BRAND NAME OR STANDARDIZATION JUSTIFICATION - OVER $5,000

A brand name description is defined as:
A title, term, symbol design or any combination used to describe a product by a unique identifier and its producer.

Standardization is defined as:
The adoption of a single product or group of products to be used by different entities or all parts of one organization, (Nash, Schooner & O'Brien, 1998)

The agency understands that:

1. Use of brand name descriptions and standardization is the least preferred type of specification as it limits competition and potentially equivalent products are not considered for award.

2. Procurements of items for which the City has established a standard of designating a brand name manufacturer or by pre-approving via testing shall be competitively bid if there is more than one supplier of the item.

THE REQUESTER PROVIDES THE FOLLOWING JUSTIFICATION FOR REQUIRING:

- [X] Brand Name Justification
- [ ] Standardization Justification

What product are you standardizing:
CLA-VALVE Pressure Reducing Valves (PRV's) that are already in use in the City of Spokane Water System

This brand name or standardization is necessary because (Check all that apply):

- [X] Interchangeability
- [ ] Expertise
- [X] Compatibility
- [X] Maintenance
- [ ] Regulation/Law
- [X] Uniformity
- [ ] Prior Functionality Testing
- [ ] Other - _____
- [ ] Other - _____

Describe the reasons above.	Current Cla-Valves in the system are reliable and have shown minimal wear after years of use, but still need maintenance form time to time.

Describe the process that the department used to verify or test that this was the only suitable solution. Attached additional sheets if necessary.	City of Spokane water department has installed Cla-Valves for over 30 years in the city's system. Currently we have over 100 PRV Cla-Valves in the system. Buying Cla-Valve parts for repair and maintenance offsets the cost of replacing the Cla-Valves with another manufacturer.
How was performance effectiveness demonstrated? Include existing conditions, prior history, and equipment longevity or durability.	Reliability of Cla-Valves over other manufacurers have proven cost effective, in boht low maintenance and longevity
If the standardization or brand name is not approved, what is the consequence to the agency? For example, additional costs or expenses that could be incurred?	Cla-Valves currently intalled in the city system would start failing and over pressurizing high pressure areas causing water hammers, that would damage water mains, equipment, and houses. We cant use other manufacurers parts in Cla-Valve bodies to repair them. We would then have to start replacing PVR's at higher costs, compared to repairing them.
What are the associated risks of non-standardization?	With more maintanence cost, along with more parts to inventory for repari of multiple different PRV's
List any additional facts supporting the standardization or brand name justification.	With more than 100 Cla-Valve PRV's already installed in the city system, it would not be cost effective to change to another brand.

STATEMENT OF NEED AND CERTIFICATION:

My department's recommendation for brand name or standardization is based upon an objective review of the product/service required and appears to be in the best interest of the City of Spokane. I know of no conflict of interest on my part or personal involvement in any way with this request. No gratuities, favors of compromising action have taken place. Neither has my personal familiarity with particular brands, types of equipment, materials or firms been a deciding influence in this request.

I hereby certify that this justification is accurate and complete to the best of my knowledge and belief.

Ryan Penaluna 23/10/24

Signature (Requestor) Date

Printed Name: Title:

DEPARTMENT DIRECTOR

Based upon the above, I authorize the brand name or standardization of the goods or services specified.

Loren Searl 24/10/24

Signature Date

Printed Name:

PURCHASING

Based upon the above, I authorize the brand name or standardization of the goods or services specified.

Jason Nechanicky (Oct 23, 2024 17:38 PDT) 24/10/23

Signature Date

Note: If additional space is required, use additional sheets of paper and submit with this completed form.

Brand Name or Standardization Justification Form v2

Final Audit Report 2024-10-24

Created:	2024-10-23
By:	Tanya Lester (tlester@spokanecity.org)
Status:	Signed
Transaction ID:	CBJCHBCAABAApzDyy-5SNxTKI3QXhsTF81GEcCeKD_IE

"Brand Name or Standardization Justification Form v2" History

Document created by Tanya Lester (tlester@spokanecity.org)
2024-10-23 - 10:38:33 PM GMT

Document emailed to Ryan Penaluna (rrpenaluna@spokanecity.org) for signature
2024-10-23 - 10:38:38 PM GMT

Document emailed to Loren Searl (lsearl@spokanecity.org) for signature
2024-10-23 - 10:38:38 PM GMT

Document emailed to Jason Nechanicky (jnechanicky@spokanecity.org) for signature
2024-10-23 - 10:38:38 PM GMT

Email viewed by Ryan Penaluna (rrpenaluna@spokanecity.org)
2024-10-23 - 10:44:43 PM GMT

Document e-signed by Ryan Penaluna (rrpenaluna@spokanecity.org)
Signature Date: 2024-10-23 - 10:47:03 PM GMT - Time Source: server

Email viewed by Jason Nechanicky (jnechanicky@spokanecity.org)
2024-10-24 - 0:38:01 AM GMT

Document e-signed by Jason Nechanicky (jnechanicky@spokanecity.org)
Signature Date: 2024-10-24 - 0:38:32 AM GMT - Time Source: server

Email viewed by Loren Searl (lsearl@spokanecity.org)
2024-10-24 - 9:14:09 PM GMT

Document e-signed by Loren Searl (lsearl@spokanecity.org)
Signature Date: 2024-10-24 - 9:16:07 PM GMT - Time Source: server

Agreement completed.

2024-10-24 - 9:16:07 PM GMT

Adobe Acrobat Sign

Agenda Sheet for City Council:

Committee: PIES **Date:** 11/10/2026

Committee Agenda type: Discussion

Council Meeting Date: 12/02/2026

Date Rec'd	11/4/2026		
Clerk's File #	OPR 2026-0926		
Cross Ref #			
Project #			
Submitting Dept	WATER & HYDROELECTRIC SERVICES	**Bid #**	RFQ 6629-26
Contact Name/Phone	REINER 509-625-7821	**Requisition #**	VALUE BLANKET
Contact E-Mail	RHERSHAW@SPOKANECITY.ORG		
Agenda Item Type	Purchase w/o Contract		
Council Sponsor(s)	KKLITZKE BWILKERSON ZZAPPONE		
Sponsoring at Administrators Request	NO		
Lease? NO	**Grant Related?** NO	**Public Works?** NO	
Agenda Item Name	PRECAST CONCRETE PRODUCTS VALUE BLANKET		

Agenda Wording

Five-year value blanket order with CDA Redi Mix & Precast, Inc. (Coeur d'Alene, ID) for precast concrete products to be ordered by the Water & Hydroelectric Services and Wastewater Maintenance departments on an as-needed basis.

Summary (Background)

RFQ #6629-26 was issued to 125 contacts via the City's electronic bidding portal on 10/6/2026. Three (3) quotes were received by the closing deadline on 10/30/2026. Award is recommended to CDA Redi Mix & Precast, Inc as the low-responsive, responsible bidder. This value blanket will be valid for a five-year term with no renewal options. Total term spend is estimated at $250,000.00 plus tax; total compensation shall be based on the unit prices accepted and the volume purchased by the City.

What impacts would the proposal have on historically excluded communities?

Public works services and projects are designed to serve all citizens and businesses. We strive to offer a consistent level of service to all, to distribute public investment throughout the community and to respond to gaps in services identified in various City plans. We recognize the need to maintain affordability and predictability for utility customers and we are committed to delivering work that is both financially and environmentally responsible.

How will data be collected, analyzed, and reported concerning the effect of the program/policy by racial, ethnic, gender identity, national origin, income level, disability, sexual orientation, or other existing disparities?

N/A

How will data be collected regarding the effectiveness of this program, policy, or product to ensure it is the right solution?

Public Works follows the City's established procurement and public works bidding regulations and policies to bring items forward, and then uses contract management best practices to ensure desired outcomes and regulatory compliance.

Describe how this proposal aligns with current City Policies, including the Comprehensive Plan, Sustainability Action Plan, Capital Improvement Program, Neighborhood Master Plans, Council Resolutions, and others?

This work is consistent with annual budget strategies to limit costs and approved projects in the 6-year CIP.

Council Subcommittee Review

Fiscal Impact

Approved in Current Year Budget?	YES
Total Cost	$ 250,000.00
Current Year Cost	$
Subsequent Year(s) Cost	$

Narrative

Award recommended to CDA Redi Mix & Precast, Inc (Coeur d'Alene, ID) as low responsive, responsible bidder. Five -year value blanket with total spend at $250,000.00 plus tax

Amount		Budget Account
Expense	$ 250,000.00	# VARIOUS
Select	$	#
Select	$	#
Select	$	#
Select	$	#
Select	$	#

Funding Source	One-Time
Funding Source Type	Program Revenue

Is this funding source sustainable for future years, months, etc?

Water and Wastewater Maintenance Warehouse Inventory Budgets

Expense Occurrence	One-Time

Other budget impacts (revenue generating, match requirements, etc.)

Water and Wastewater Maintenance Warehouse Inventory Budgets

Approvals		Additional Approvals	
Dept Head	HOPKINS, LEON	PURCHASING	PRINCE, THEA
Division Director	FEIST, MARLENE		
Accounting Manager	ALBIN-MOORE, ANGELA		
Legal	FAIRBORN, KATHERINE		
For the Mayor	PICCOLO, MIKE		

Distribution List

Sam sams@cdaprecast.com	rhershaw@spokanecity.org
csasser@spokanecity.org	rrpenaluna@spokanecity.org
nrussell@spokanecity.org	tprince@spokanecity.org
tlester@spokanecity.org	

Committee Agenda Sheet
Public Infrastructure, Environment & Sustainability Committee

Committee Date	11-10-26 12-8-26
Submitting Department	Water & Hydroelectric Services and Wastewater Maintenance
Contact Name	Reiner Hershaw and Raylene Gennett
Contact Email & Phone	rhershaw@spokanecity.org 509-625-7821 rgennett@spokanecity.org 509-625-7901
Council Sponsor(s)	Klitzke, Wilkerson, Zappone
Select Agenda Item Type	☒ Consent ☐ Discussion Time Requested:
Agenda Item Name	PRECAST CONCRETE PRODUCTS VALUE BLANKET
Proposed Council Action	☒ Approval to proceed to Legislative Agenda ☐ Information Only
Summary (Background) *use the Fiscal Impact box below for relevant financial information	**Summary (Background)** RFQ #6629-26 was issued to 125 contacts via the City's electronic bidding portal on 10/6/2026. Three (3) quotes were received by the closing deadline on 10/30/2026. Award is recommended to CDA Redi Mix & Precast, Inc as the low-responsive, responsible bidder. This value blanket will be valid for a five-year term with no renewal options. Total term spend is estimated at $250,000.00 plus tax; total compensation shall be based on the unit prices accepted and the volume purchased by the City.

Fiscal Impact

Approved in current year budget? ☒ Yes ☐ No ☐ N/A

Total Cost: 250,000.00

Current year cost:

Subsequent year(s) cost:

Narrative: Award recommended to CDA Redi Mix & Precast, Inc (Coeur d'Alene, ID) as low responsive, responsible bidder. Five -year value blanket with total spend at $250,000.00 plus tax

Funding Source ☒ One-time ☐ Recurring ☐ N/A

Specify funding source: Program revenue

Is this funding source sustainable for future years, months, etc? Click or tap here to enter text.

Expense Occurrence ☒ One-time ☐ Recurring ☐ N/A

Other budget impacts: Water and Wastewater Maintenance Warehouse Inventory Budgets.

Operations Impacts (If N/A, please give a brief description as to why)

- What impacts would the proposal have on historically excluded communities?
  Public works services and projects are designed to serve all citizens and businesses. We strive to offer a consistent level of service to all, to distribute public investment throughout the community and to respond to gaps in services identified in various City plans. We recognize the need to maintain affordability and predictability for utility customers and we are committed to delivering work that is both financially and environmentally responsible.

- How will data be collected, analyzed, and reported concerning the effect of the program/policy by racial, ethnic, gender identity, national origin, income level, disability, sexual orientation, or other existing disparities?
  N/A
- How will data be collected regarding the effectiveness of this program, policy, or product to ensure it is the right solution?
  Public Works follows the City's established procurement and public works bidding regulations and policies to bring items forward, and then uses contract management best practices to ensure desired outcomes and regulatory compliance.
- Describe how this proposal aligns with current City Policies, including the Comprehensive Plan, Sustainability Action Plan, Capital Improvement Program, Neighborhood Master Plans, Council Resolutions, and others?
  This work is consistent with annual budget strategies to limit costs and approved projects in the 6-year CIP.

Council Subcommittee Review

- Please provide a summary of council subcommittee review. If not reviewed by a council subcommittee, please explain why not.

Bid Response Summary

Bid Number	**RFQ 6629-26**
Bid Title	**Precast Concrete Products - Value Blanket**
Bid Base Currency	**USD**
Due Date	**Friday, October 30, 2026 3:30:00 PM [(UTC-08:00) Pacific Time (US & Canada)]**
Bid Status	**Closed to Bidding**
Company	**CDA Precast LLC**
Submitted By	**Sam Swanson - Thursday, October 29, 2026 3:09:30 PM [(UTC-08:00) Pacific Time (US & Canada)]** **sams@cdaprecast.com 208 916 1708**
Comments	

Question Responses

Group	Reference Number	Question	Response
Default Item Group			
	ADDENDA	Bidder acknowledges receipt of _____ addenda and agrees that their requirements have been included in this bid proposal.	yes
Contact			
	1	Please indicate the appropriate point of contact (including phone number and email) regarding this quote and placement of order if awarded. If these actions will not be managed by the same person, please explicitly specify all relevant contacts.	Sam Swanson 208 916 1708 Sams@cdaprecast.com
Value Blanket Terms			
	1	This product shall be awarded on a five (5) year value blanket order or orders. The quantities provided represent an annual usage estimate and payment shall be made only for release orders placed, received, and accepted.	Understood and Agreed
	2	Product will be ordered off the value blanket on an as-needed basis with no guarantee of quantities.	Understood and Agreed

	3	Pricing as quoted shall be firm for placement of orders for one (1) year from the date of order placement. Thereafter, the supplier may propose updated pricing on a annual basis, firm for any orders placed for the following year, subject to City acceptance. Price increases requested by the supplier shall be accompanied with sufficient justification from the product manufacturer. During the contract period and any renewals thereof, price decreases at the manufacturer's and wholesaler's levels shall be reflected in a price reduction to the City retroactive to the supplier's effective date. The supplier may request cost increases only upon annual provision of pricing or upon the City's invitation for renewal. The supplier's prices shall otherwise remain firm throughout the contract period with no provision for increases unless specific provisions are proposed and agreed upon.	Understood and Agreed
	4	The City reserves the right to inquire at any time for sufficient justification of the supplier's current pricing.	Understood and Agreed
Product			
	1	All product must meet City of Spokane specifications and applicable AWWA standards.	Understood and Agreed
	2	All 'Riser Rings' must fully comply with City Standard Plan A-8 (attached in the 'Documents' tab). The cast iron and concrete cone section are *NOT* required.	Understood and Agreed
	3	All 'Meter Box' products must fully comply with City Meter Cone & Rings drawing specifications (attached in the 'Documents' tab).	Understood and Agreed
	4	Meter Box Half Ring and Riser Ring product shall be ordered by the pallet. One pallet of product shall constitute the minimum order quantity.	Understood and Agreed
	5	Pallet quantity of #B3640-4x36 - Concrete Meter Box Half Ring, 4" x 36":	73
	6	Pallet quantity of #B3636-1 - Concrete Riser Ring, 1" x 36":	40
	7	Pallet quantity of #B3636-2 - Concrete Riser Ring, 2" x 36":	36
	8	Pallet quantity of #B3636-3 - Concrete Riser Ring, 3" x 36":	38
	9	Pallet quantity of #B3636-4 - Concrete Riser Ring, 4" x 36":	40
	10	Pallet quantities shall not be adjusted without notification to and consent from the City of Spokane.	Understood and Agreed
Delivery			
	1	All freight expenses shall be the responsibility of the winning supplier. Unit pricing on this quote is understood to include delivery to the FOB point.	Understood and Agreed

	2	All product shall be ordered/delivered FOB: Destination to 914 E. North Foothills Dr. Spokane, WA 99207 *or* 909 E. Sprague Ave. Spokane, WA 99202.	Understood and Agreed
	3	The FOB locations are open for deliveries Monday through Friday between the hours of 8:00am and 3:00pm.	Understood and Agreed
	4	Partial deliveries shall be accepted and any delivery delays must be communicated to the City employee who placed the order *before* the anticipated delivery date. Supplier is responsible for ensuring all deliveries meet promised timelines and for any resulting expenses, such as expedited freight costs.	Understood and Agreed
	5	Product herein quoted shall be delivered in full within the following number of business days ARO:	7
	6	An order of four (4) meter box rings, a meter box bottom ring, and a meter box cone shall constitute a 'full meter box assembly' and shall be delivered palletized, stacked with the meter box bottom ring on the bottom, the meter box rings in the middle, and the meter box cone on the top, unless otherwise specified by the City. Supplier shall be responsible for ensuring no damage occurs in transit.	Understood and Agreed
Sales Tax			
	1	The City of Spokane is not a tax-exempt entity and is therefore obligated to pay sales tax under Washington State law. Sales tax should not be included in respondent’s pricing. All submissions shall be tabulated with the applicable sales tax rate whether that tax shall be charged through the supplier or paid by the City as use tax.	Understood and Agreed
Payment Terms			
	1	Payment shall be made via direct deposit/ACH (except as provided by state law or if paid by credit card) according to net30 terms after receipt of goods ordered. A completed ACH application is required (if not already on file) before a City order will be issued. If the City objects to all or any portion of an invoice, it shall notify the supplier and reserve the right to pay only that portion of the invoice not in dispute. In that event, all parties shall immediate make every effort to settle the disputed amount.	Understood and Agreed
Business Registration Requirement			

	1	Section 8.01.070 of the Spokane Municipal Code states that no person may engage in business with the City without first having obtained and being the holder of a valid annual business registration or temporary business registration as provided in this chapter. The supplier shall be responsible for contacting the State of Washington Business License Services at http://bls.dor.wa.gov or 1-800-451-7985 to obtain a business registration. If the supplier does not believe it is required to obtain a business registration, it may contact the City's Taxes and Licenses Division at 509-625-6070 to request an exemption status determination.	Understood and Agreed
	2	Supplier's Business Registration No.	412556863
Polychlorinated Biphenyls (PCBs)			
	1	In accordance with SMC 7.06.172(A), the respondent certifies that the products quoted and to be supplied (to include product packaging) do not contain polychlorinated biphenyls (PCBs). Moreover and consistent with SMC 7.06.172(B), the City of Spokane, at its sole discretion, may require (at no cost to the City) the apparent successful respondent to provide testing data (prior to contract execution or issue of purchase order) from an accredited laboratory or testing facility documenting the proposed products and or product packaging polychlorinated biphenyl levels.	Understood and Agreed
	2	As far as you know, has this product type been tested for PCBs by a WA State accredited lab using EPA Method 1668c (or equivalent as updated)?	No
	3	If so, were PCBs found at a measurable level?	No
	4	As far as you know, has this actual product been tested for PCBs by a WA State accredited lab using EPA Method 1668 (or equivalent as updated)?	No
	5	If so, note from whom the results can be obtained.	
	6	Do you have reason to believe the product contains measurable levels of PCBs?	No
	7	Do you have reason to believe the product packaging contains measurable levels of PCBs?	No
Terms & Conditions			
	1	Submission of a response to this request constitutes acceptance of the Terms & Conditions so named in the 'Documents' tab.	Understood and Agreed

Pricing Responses

Group	Reference Number	Description	Type	Unit Of Measure	Quantity	Symbol	Title	Unit Price	Ext Base Price	Comment
Product										

	City #B3638-9x36	Concrete Meter Box Ring, 9" x 36"	Base	Each	288.00	$	USD	$80.00	$23,040.00	
	City #B3638-Bttm	Concrete Meter Box Bottom Ring	Base	Each	72.00	$	USD	$80.00	$5,760.00	
	City #B3639-11x36	Concrete Meter Box Cone, 11" x 36"	Base	Each	80.00	$	USD	$80.00	$6,400.00	
	City #B3640-4x36	Concrete Meter Box Half Ring, 4" x 36"	Base	Each	12.00	$	USD	$77.00	$924.00	
	City #B3636-1	Concrete Riser Ring, 1" x 36"	Base	Each	1.00	$	USD	$40.00	$40.00	
	City #B3636-2	Concrete Riser Ring, 2" x 36"	Base	Each	106.00	$	USD	$36.00	$3,816.00	
	City #B3636-3	Concrete Riser Ring, 3" x 36"	Base	Each	90.00	$	USD	$38.00	$3,420.00	
	City #B3636-4	Concrete Riser Ring, 4" x 36"	Base	Each	45.00	$	USD	$40.00	$1,800.00	
Total Base Bid	$45,200.00									

RFQ 6629-26 Precase Value blanket						
Reference Number	**Description**	**UOM**	**QTY**	**CDA Precast LLC**	**White Block Company, Inc**	**Spilker Precast**
ARO				**7 days**	**15 days**	**20 days**
City #B3638-9x36	Concrete Meter Box Ring, 9" x 36"	Each	288	$23,040.00	$26,124.48	$39,643.20
City #B3638-Bttm	Concrete Meter Box Bottom Ring	Each	72	$5,760.00	$7,464.96	$10,290.24
City #B3639-11x36	Concrete Meter Box Cone, 11" x 36"	Each	80	$6,400.00	$8,294.40	$17,121.60
City #B3640-4x36	Concrete Meter Box Half Ring, 4" x 36"	Each	12	$924.00	$1,088.52	$1,739.76
City #B3636-1	Concrete Riser Ring, 1" x 36"	Each	1	$40.00	$0.00	$73.86
City #B3636-2	Concrete Riser Ring, 2" x 36"	Each	106	$3,816.00	$4,770.00	$6,922.86
City #B3636-3	Concrete Riser Ring, 3" x 36"	Each	90	$3,420.00	$4,365.00	$6,823.80
City #B3636-4	Concrete Riser Ring, 4" x 36"	Each	45	$1,800.00	$2,745.00	$4,099.95
Product				$45,200.00	$54,852.36	$86,715.27

License Information:

New search Back to results

Entity name: CDA PRECAST, LLC

Business name: CDA PRECAST, LLC

Entity type: Limited Liability Company

UBI #: 606-037-095

Business ID: 001

Location ID: 0001

Location: Active

Location address: 6399 W BEDROCK RD
POST FALLS ID 83854-4328

Mailing address: 6399 W BEDROCK RD
POST FALLS ID 83854-4328

Excise tax and reseller permit status: Click here

Secretary of State information: Click here

Endorsements

Endorsements held at this loca	License #	Count	Details	Status	Expiration date	First issuance d
Liberty Lake General Business - Non-Resident				Active	Feb-28-2027	Feb-13-2026
Spokane General Business - Non-Resident				Active	Feb-28-2027	Feb-11-2026
Spokane Valley General Business - Non-Resident				Active	Feb-28-2027	Feb-12-2026

Owners and officers on file with the Department of Revenue

Owners and officers	Title
IRVINE, RYDER	Member
IRVINE, SHARON	Member

Registered Trade Names

Registered trade names	Status	First issued
CDA PRECAST, LLC	Active	Feb-11-2026

The Business Lookup information is updated nightly. Search date and time: 11/3/2026 8:05:00 AM

Contact us

How are we doing?
Take our survey!

Don't see what you expected?
Check if your browser is supported

Agenda Sheet for City Council:

Committee: PIES **Date:** 11/10/2026

Committee Agenda type: Reports, Contracts & Claims

Council Meeting Date: 12/02/2026

Date Rec'd	11/3/2026		
Clerk's File #	OPR 2026-0927		
Cross Ref #			
Project #	2026060		
Submitting Dept	INTEGRATED CAPITAL	**Bid #**	
Contact Name/Phone	LORENA 6894	**Requisition #**	
Contact E-Mail	LCROUCHER@SPOKANECITY.ORG		
Agenda Item Type	Contract Item		
Council Sponsor(s)	KKLITZKE		
Sponsoring at Administrators Request	NO		
Lease? NO	**Grant Related?** YES	**Public Works?** NO	
Agenda Item Name	ECOLOGY WATER QUALITY COLUMBIA RIVER BASIN GRANT (WQCRBR-2527-		

Agenda Wording

Grant Agreement between the City and the State of Washington Department of Ecology for a Spokane River Toxics Reduction Grant (WQCRBR-2527-Spokan-00011) for Baseline PFAS Fate and Transport Study in City of Spokane's Wastewater System.

Summary (Background)

This is a new contract for a grant agreement with the Washington State Department of Ecology. The City of Spokane received notice of award for Ecology's Spokane Basin Subaward Funding Program for Fiscal Year 2027 (SFY27) for a project grant to perform a baseline per- and polyfluoroalkyl substances (PFAS) within the City's wastewater system. The City received $214,000 through the funding program to initiate the sampling study.

What impacts would the proposal have on historically excluded communities?

Public works services and projects are designed to serve all citizens and businesses. We strive to offer a consistent level of service to all, distribute public investment throughout the community, and respond to gaps in services identified in various City plans.

How will data be collected, analyzed, and reported concerning the effect of the program/policy by racial, ethnic, gender identity, national origin, income level, disability, sexual orientation, or other existing disparities?

n/a

How will data be collected regarding the effectiveness of this program, policy, or product to ensure it is the right solution?

Public Works follows the City's established procurement and public works bidding regulations and policies to bring items forward and then uses contract management best practices to ensure desired outcomes and regulatory compliance.

Describe how this proposal aligns with current City Policies, including the Comprehensive Plan, Sustainability Action Plan, Capital Improvement Program, Neighborhood Master Plans, Council Resolutions, and others?

This work is consistent with annual budget strategies to limit costs and approved projects in the 6-year CIP.

Council Subcommittee Review

n/a

Fiscal Impact

Approved in Current Year Budget?	YES
Total Cost	$ 214,000
Current Year Cost	$ 214,000
Subsequent Year(s) Cost	$ 0

Narrative

This item is for a grant awarded to the City by the Department of Ecology.

Amount		Budget Account
Revenue	$ 214,000	# Various
Select	$	#
Select	$	#
Select	$	#
Select	$	#
Select	$	#

Funding Source	One-Time
Funding Source Type	Grant

Is this funding source sustainable for future years, months, etc?

No, this project work is based on availability of grant funding only.

Expense Occurrence	One-Time

Other budget impacts (revenue generating, match requirements, etc.)

n/a

Approvals		Additional Approvals	
Dept Head	PICANCO, KEVIN	ACCOUNTING -	BROWN, SKYLER
Division Director	FEIST, MARLENE		
Accounting Manager	ALBIN-MOORE, ANGELA		
Legal	FAIRBORN, KATHERINE		
For the Mayor	PICCOLO, MIKE		

Distribution List

Jon Kenning, jon.kenning@ecy.wa.gov	icmaccounting@spokanecity.org
tax&licenses@spokanecity.org	lcroucher@spokanecity.org
kpicanco@spokanecity.org	eraea@spokanecity.org

Agreement No. WQCRBR-2527-Spokan-00011

WATER QUALITY COLUMBIA RIVER BASIN RESTORATION AGREEMENT

BETWEEN

THE STATE OF WASHINGTON DEPARTMENT OF ECOLOGY

AND

CITY OF SPOKANE

This is a binding Agreement entered into by and between the state of Washington, Department of Ecology, hereinafter referred to as "ECOLOGY," and City of Spokane, hereinafter referred to as the "RECIPIENT," to carry out with the provided funds activities described herein.

GENERAL INFORMATION

Project Title:	Baseline PFAS Fate and Transport Study in COS Wastewater System
Total Cost:	$214,000.00
Total Eligible Cost:	$214,000.00
Ecology Share:	$214,000.00
Recipient Share:	$0.00
The Effective Date of this Agreement is:	06/01/2026
The Expiration Date of this Agreement is no later than:	06/30/2027
Project Type:	Columbia River

Project Short Description:
This project will characterize the presence, transport, and fate of per- and polyfluoroalkyl substances (PFAS) within the City of Spokane's wastewater system to establish a baseline understanding of system-wide concentrations. Sampling will include domestic, commercial, and industrial sources within the collection system; influent, effluent, biosolids, and septage at the Riverside Park Water Reclamation Facility (RPWRF); and soils from past and future biosolids land application sites.

Project Long Description:
Per- and polyfluoroalkyl substances (PFAS) are a large group of synthetic compounds that have emerged as contaminants of increasing regulatory, scientific, and public health concern (CECs). Known for their persistence, resistance to degradation, and ability to bioaccumulate, PFAS are often referred to as "forever chemicals." Their mobility in water and soils, combined with potential links to adverse human health and ecological effects, underscores the urgency of developing strategies to monitor and manage their presence in the

environment.

Municipal wastewater systems play an important role in the PFAS cycle. Because of their widespread use in industrial processes, commercial products, and households, PFAS often enter wastewater collection systems through diverse sources. Wastewater treatment plants are therefore not only recipients of PFAS but also potential redistribution points, releasing them through effluent, concentrating them in biosolids, and introducing them into soils via land application practices. This interconnectedness means that understanding PFAS pathways within a city's wastewater infrastructure is critical for protecting downstream water quality - including that of the Spokane River -safeguarding agricultural soils, and supporting regulatory compliance.

This project seeks to establish a baseline understanding of PFAS within the City of Spokane's wastewater system. Through two quarterly monitoring events, we will begin to characterize PFAS concentrations and distribution in domestic, commercial, and industrial inputs to the collection system. In addition, we will evaluate influent, effluent, biosolids, and septage streams at the City's Riverside Park Water Reclamation Facility (RPWRF), as well as soils at historical and future biosolids land application sites. Together, this data will provide a clearer picture of the presence, transport, and fate of PFAS throughout Spokane's wastewater and biosolids management systems.

The results of this study will provide a critical foundation for decision-making. By identifying potential sources and quantifying PFAS loads at key points within the system, the City will be positioned to make informed choices around regulatory compliance, treatment and mitigation strategies, and long-term management of biosolids and land application programs. These actions will help reduce the risk of PFAS entering the Spokane River, contributing to improved water quality for people, fish, and wildlife. Moreover, this project will generate valuable data to support regional and national discussions on PFAS, contributing to a growing body of knowledge that will guide future policy, technology development, and public health protections.

Ultimately, this effort represents an important step toward proactive environmental stewardship. By advancing Spokane's understanding of PFAS within its wastewater system, the project will help ensure that the City is equipped to address emerging regulatory requirements, protect community health, and safeguard the lower Spokane River both now and in the future.

Overall Goal:
The goal of this project is to establish a comprehensive baseline understanding of PFAS occurrence, transport, and fate within the City of Spokane's wastewater system in order to inform regulatory compliance, guide mitigation strategies, and support the long-term protection of public health and environmental resources.

RECIPIENT INFORMATION

Organization Name: City of Spokane

Federal Tax ID: 91-6001280
UEI Number: PDNCLY8MYJN3

Mailing Address: 808 W Spokane Falls Blvd
Spokane, WA 99201

Physical Address: 808 W Spokane Falls Blvd
Spokane, Washington 99201

Organization Email: mpapich@spokanecity.org
Organization Fax: (509) 343-5760

Contacts

Project Manager	Lorena Croucher Associate Engineer 808 W Spokane Falls Blvd Spokane, Washington 99201 Email: lcroucher@spokanecity.org Phone: (509) 625-6310
Billing Contact	Kathleen Keck Senior Accountant 808 W Spokane Falls Blvd Spokane, Washington 99201 Email: kkeck@spokanecity.org Phone: (509) 625-6075
Authorized Signatory	Marlene C Feist Public Works Director 808 W Spokane Falls Blvd Spokane, Washington 99201 Email: mfeist@spokanecity.org Phone: (509) 625-6310

ECOLOGY INFORMATION

Mailing Address: Department of Ecology
Water Quality
PO BOX 47600
Olympia, WA 98504-7600

Physical Address: Water Quality
300 Desmond Drive SE
Lacey, WA 98503

Contacts

Project Manager	Cheyenne Brown 4601 N Monroe Street Spokane, Washington 99205-1295 Email: CHEY461@ecy.wa.gov Phone: (509) 999-0682
Financial Manager	Cheyenne Brown 4601 N Monroe Street Spokane, Washington 99205-1295 Email: CHEY461@ecy.wa.gov Phone: (509) 999-0682

AUTHORIZING SIGNATURES

RECIPIENT agrees to furnish the necessary personnel, equipment, materials, services, and otherwise do all things necessary for or incidental to the performance of work as set forth in this Agreement.

RECIPIENT acknowledges that they had the opportunity to review the entire Agreement, including all the terms and conditions of this Agreement, Scope of Work, attachments, and incorporated or referenced documents, as well as all applicable laws, statutes, rules, regulations, and guidelines mentioned in this Agreement. Furthermore, the RECIPIENT has read, understood, and accepts all requirements contained within this Agreement.

This Agreement contains the entire understanding between the parties, and there are no other understandings or representations other than as set forth, or incorporated by reference, herein.

No subsequent modifications or amendments to this agreement will be of any force or effect unless in writing, signed by authorized representatives of the RECIPIENT and ECOLOGY and made a part of this agreement. ECOLOGY and RECIPIENT may change their respective staff contacts without the concurrence of either party.

This Agreement shall be subject to the written approval of Ecology's authorized representative and shall not be binding until so approved.

The signatories to this Agreement represent that they have the authority to execute this Agreement and bind their respective organizations to this Agreement.

IN WITNESS WHEREOF: the parties hereto, having read this Agreement in its entirety, including all attachments, do agree in each and every particular and have thus set their hands hereunto.

Washington State
Department of Ecology

By: _____

Jon Kenning, PhD Date

Water Quality

Program Manager

Template Approved to Form by
Attorney General's Office

City of Spokane

By: _____

Marlene C Feist Date

Public Works Director

SCOPE OF WORK

Task Number: 1 **Task Cost:** $17,000.00

Task Title: Project Development

Task Description:

1.1 QUALITY ASSURANCE PROJECT PLAN (QAPP) DEVELOPMENT

Work related to data collection or analysis may not begin until the Quality Assurance Project Plan (QAPP) is approved by the Washington State Department of Ecology's Program Quality Coordinator (QC) or the QC provides written documentation that a QAPP is not required.

Project work should not begin until the Quality Assurance Project Plan (QAPP) has Quality Assurance approval. At contract start, the RECIPIENT must work with the QC to ensure the project meets quality assurance requirements per the contract terms and conditions.

The RECIPIENT is also required to conduct and document an annual review of the approved QAPP with ECOLOGY for projects exceeding one year in duration. For any changes prior to the annual review the RECIPIENT must contact the QC to confirm required documentation. Changes may include but are not limited to new sampling sites, extended timeline, updated methods, and changes to analysis.

1.2 CULTURAL RESOURCES REVIEW

The RECIPIENT will comply with Section 106 cultural resources review requirements that involve any project site disturbance.

To initiate cultural resources, review the RECIPIENT will:

1. Complete and submit an Ecology Cultural Resources Review Form, and or a cultural resources report completed by a licensed professional to ECOLOGY.
2. Complete and submit an Ecology Inadvertent Discovery Plan (IDP) to ECOLOGY. The RECIPIENT will ensure that all contractors and subcontractors have a copy of the completed IDP prior to and while working on-site.

The RECIPIENT will complete all cultural resource review requirements as described in this agreement and the Final Determination by ECOLOGY prior to any site disturbing work.

*Cultural Resources Review may take up to 45-60 days to complete.

Task Goal Statement:

The RECIPIENT will develop a plan for project implementation and monitoring (if required) to support the successful completion of the PROJECT.

Task Expected Outcome:

The RECIPIENT will produce and submit to ECOLOGY a QAPP (if required) prior to commencement of the PROJECT. RECIPIENT will complete project factsheets before the end of the project.

Recipient Task Coordinator: Jeff Donovan

Project Development

Deliverables

Number	Description	Due Date
1.1	Copy of signed QAPP or QAPP waiver documentation. Upload to EAGL and notify PM and FM.	09/11/2026
1.2	An ECOLOGY Cultural Resources Review Waiver or ECOLOGY Final Determination and IDP.	09/11/2026

SCOPE OF WORK

Task Number: 2 **Task Cost:** $0.00

Task Title: Project Administration and Reporting

Task Description:
Task 2 describes the project administrative and reporting requirements. The RECIPIENT will refer to and comply with all underlying state and federal terms and conditions.

2.1 PROGRESS REPORTS/PAYMENT REQUESTS (PRPR)
The RECIPIENT will complete quarterly payment request and progress reports (PRPR) in EAGL (Ecology Administration of Grants and Loans). The RECIPIENT will maintain project records, submit requests for reimbursement with corresponding backup documentation, and fully complete progress reports. Quarterly reporting periods are:
Quarter 1 reporting period: January 1 – March 31; due April 30
Quarter 2 reporting period: April 1 – June 30; due July 30
Quarter 3 reporting period: July 1 – September 30; due October 30
Quarter 4 reporting period: October 1 – December 31; due January 30

Progress reports shall include:
- A description of:
  - Work completed for each task/subtask during the reporting period, including what deliverables were completed and submitted during the reporting period.
  - Total allowable spending by task.
  - Status for ongoing project tasks.
  - Challenges affecting task-specific or overall project completion date(s), scope of work, or costs.
- Evidence of satisfactory completion of all reporting requirements.

The RECIPIENT will submit invoices at least quarterly, but no more frequently than monthly.

2.2 RECIPIENT CLOSE OUT REPORT (RCOR) IN EAGL
At the conclusion of the project, the RECIPIENT will complete the Recipient Close Out Report (RCOR) in EAGL. The RCOR Form will include project accomplishments, challenges, and all relevant project information.

2.3 EIM DATA REPORTING
The RECIPIENT collects any physical, chemical, or environmental data (e.g., dissolved oxygen, water temperature, salinity, turbidity, pH, phosphorous, total nitrogen, E. coli or enterococci, and other biological and habitat data), then the RECIPIENT's QAPP will specify data to be reported.

The RECIPIENT will submit all environmental data to ECOLOGY's Environmental Informational Management System (EIM). The RECIPIENT must confirm with ECOLOGY that complete and correct data was successfully uploaded, find instructions at
https://ecology.wa.gov/Research-Data/Data-resources/Environmental-Information-Management-database

2.4 CONTRACTS AND SUBAWARDS
The RECIPIENT may execute one or more subcontracts (professional services agreements). Selection of subcontractor

by RECIPIENT must comply with applicable provisions of 2 CFR Part 200 and the EPA Subaward Policy, which may be found at https://www.epa.gov/grants/grants-policy-issuance-gpi-16-01-epa-subaward-policy-epa-assistance-agreement-recipients. A meeting(s) may be held to clarify the scope, schedule, and deliverables. The RECIPIENT and subcontractor will execute the contract and hold a kick-off meeting.

Task Goal Statement:
Properly managed and fully documented project that meets ECOLOGY's grant or loan administrative requirements.

Task Expected Outcome:
* Timely and complete submittal of requests for reimbursement, quarterly progress reports, EAGL closeout report, and final project report.
* Properly maintained project documentation

Recipient Task Coordinator: Jeff Donovan

Project Administration and Reporting

Deliverables

Number	Description	Due Date
2.1	Quarterly Progress Reporting	05/14/2027
2.2	Recipient Close Out Report Completed in EAGL	
2.3	EIM Data Reporting	
2.4	Copy(s) of final consultant contract(s) subawards. Upload to EAGL and notify PM and FM.	

SCOPE OF WORK

Task Number: 3 **Task Cost:** $110,000.00

Task Title: Field Sampling and Lab Analysis

Task Description:
Task 3 describes the sampling and analytical lab testing associated with two quarterly sampling events.

3.1 FIELD SAMPLING
The RECIPIENT will complete two quarterly PFAS sampling events in accordance with the sampling plan identified in the QAPP. The QAPP will include elements for a detailed sampling plan, with an overview and summary of sampling locations as well as criteria and justification for the selection of those sampling locations, a basic summary of sampling methodology for each site, as well as proposed times and dates, or criteria for selection of time and dates (i.e., if certain environmental conditions are necessary for sampling at certain sites) of sampling. Sampling locations will be strategically and spatially spread throughout the system to be able to accurately characterize PFAS throughout the City's wastewater system.

Potential sampling locations may include:
- Collection System (Domestic/Commercial)
- Collection System (Interceptor)
- Prioritized Sources (Industrial)
- Septic Receiving Station
- RPWRF Influent and Effluent
- Historical Biosolids Land Application Sites
- Biosolids (prior to land application)
- Farm Soils (prior to land application
- Targeted Stormwater MS4 outfalls

Given the expedited schedule associated with this funding source, the RECIPIENT proposes to conduct two quarterly sampling events using the requested funds. However, the Sampling Plan developed under Task 3.1 will be structured to encompass a full year of sampling to support a comprehensive characterization that reflects seasonal variability. Should additional funding become available, the RECIPIENT would seek to implement a subsequent phase of sampling to capture the remaining two quarterly periods.

3.2 ANALYTICAL TESTING
The RECIPIENT will utilize a third-party laboratory to analyze the collected PFAS samples. The laboratory (to be identified) will be expected to utilize EPA Method 1633A to analyze all samples.

Task Goal Statement:
The goal of this task is to implement systemwide PFAS sampling in accordance with the approved QAPP to begin the process of generating comprehensive data on PFAS occurrence and variability within the City's wastewater system. Initial efforts will focus on completing two quarterly sampling events under the available funding, while maintaining a framework that supports a full year of seasonal characterization should additional funding become available.

Task Expected Outcome:

The RECIPIENT will collect system-wide samples for two quarterly sampling events and send said samples to a 3rd party laboratory for analytical testing. The resulting analytical dataset will be the critical first step for developing the mass balance and PFAS Characterization Study framework proposed under Task 4.

Recipient Task Coordinator: Lorena Croucher

Field Sampling and Lab Analysis

Deliverables

Number	Description	Due Date
3.1	Quarterly Summary of System Wide Sampling Events	06/04/2027
3.2	Copy of Analytical Testing Results (3rd Party Lab TBD)	

SCOPE OF WORK

Task Number: 4 **Task Cost:** $87,000.00

Task Title: Wastewater System PFAS Characterization Study

Task Description:
Task 4 describes the reporting needs associated with the PFAS sampling events.

4.1 DEVELOP PFAS CHARACTERIZATION STUDY REPORT
Develop a report that summarizes the results of the two quarterly sampling events identified in Task 3.
The RECIPIENT will develop an interim report that communicates the results of the systemwide PFAS Characterization Study conducted across the City's wastewater collection system, the Riverside Park Water Reclamation Facility (RPWRF), and associated biosolids management and land application areas. The report will synthesize sampling results, analytical findings, and data interpretation to support informed decision making and future planning.
Given the limited dataset that will be generated through the initial two quarters of sampling, there may not be enough data to fully inform the larger study goals laid out in the overview section of this SOW. Given these constraints, sampling and analysis in future quarters is envisioned which would build enough baseline data to inform those objectives, should funding be available. The interim report will include the initial understanding of the following components, where possible:
- Collection System Baseline Characterization: Summary of PFAS occurrence, concentration ranges, and spatial patterns across representative wastewater streams and identified source areas within the collection system.
- RPWRF Mass Balance Assessment: Evaluation of PFAS fate and transport through the treatment process, including influent, effluent, and biosolids pathways.
- Biosolids and Land Application Site Characterization: Assessment of PFAS concentrations in biosolids and representative farm land application locations.
- Implications for Human Health and the Environment: Discussion of findings in the context of population based human health considerations, regulatory benchmarks, and potential exposure pathways relevant to the service area and receiving communities.
- Recommendations: Identification of potential mitigation strategies, data gaps, and priorities for additional monitoring or study.

The report will focus on geographic areas served by the City's wastewater system, including urban and industrial areas contributing to the collection system and rural agricultural areas where biosolids are managed and applied. Findings will be presented in a clear, accessible manner to support transparency and understanding among technical staff, decision-makers, and the broader community.

The final report will serve as a key project deliverable and a foundational resource for future PFAS management, regulatory coordination, and community engagement.

The RECIPIENT anticipates utilizing a consultant to complete this task via an MRSC roster selection process to select the consultant.

Task Goal Statement:
The goal of this task is to produce a clear, comprehensive, and technically defensible summary report that characterizes

PFAS sampling data collected to date. Over time, and as additional data is collected, the report is intended to inform decision-making around future PFAS management actions available to the City.

Task Expected Outcome:
Summary report of PFAS sampling events conducted to date, including characterization observations and recommended next steps.

Recipient Task Coordinator: Lorena Croucher

Wastewater System PFAS Characterization Study

Deliverables

Number	Description	Due Date
4.1	Wastewater System PFAS Characterization Study	

SCOPE OF WORK

Task Number: 5 **Task Cost:** $

Task Title: Broader Impacts and Communication

Task Description:
The recipient will communicate project outcomes, lessons learned, and recommendations.

5.1 BROADER IMPACTS
This subtask should note work product, focus audience, method, purpose of communication.

The RECIPIENT will present updates, initial results and findings, barriers or challenges, and potential next steps, at monthly SRTAC meetings.

5.2 DRAFT FINAL REPORT
The RECIPIENT will complete a Draft Final Report. The Draft Final Report will summarize methods, results, lessons learned, recommendations for future work, and a map (as applicable showing sample site locations, draft plans etc.). The final report will also include ….

ECY will have 30 days to review the draft Final Report and provide feedback.

5.3 FINAL REPORT
The RECIPIENT will complete a final report that incorporates the feedback and comments from ECY and other partners (Subtask 5.2). The final report will summarize methods, results, lessons learned, and recommendations for future work.

Task Goal Statement:
The goal of this Task is to communicate the impact and success of the project to the broader community.

Task Expected Outcome:
Presentation of initial findings at SRTAC. Final Report.

Broader Impacts and Communication

Deliverables

Number	Description	Due Date
5.1	Notes and summary of information presented at SRTAC meetings uploaded to EAGL.	
5.2	Draft Final Report uploaded to EAGL. Notify PM and FM for 30 day review and comment period.	
5.3	Final Report uploaded to EAGL. Notify PM and FM.	

BUDGET

Funding Distribution EG270079

NOTE: *The above funding distribution number is used to identify this specific agreement and budget on payment remittances and may be referenced on other communications from ECOLOGY. Your agreement may have multiple funding distribution numbers to identify each budget.*

Funding Title: Spokane Basin Toxics Reduction
Funding Type: Grant
Funding Effective Date: 06/01/2026 Funding Expiration Date: 06/30/2027
Funding Source:

Title: Model Toxics Control Account

Fund: FD
Type: State
Funding Source %: 100%
Description: Spokane River Toxics Reduction funding

Approved Indirect Costs Rate: Approved State Indirect Rate: 0%
Recipient Match %: 0%
InKind Interlocal Allowed: No
InKind Other Allowed: No
Is this Funding Distribution used to match a federal grant? No

Spokane Basin Toxics Reduction	**Task Total**
Project Development	$ 17,000.00
Project Administration and Reporting	$ 0.00
Field Sampling and Lab Analysis	$ 110,000.00
Wastewater System PFAS Characterization Study	$ 87,000.00
Broader Impacts and Communication	$ 0.00
	Total: $ 214,000.00

Funding Distribution Summary

Recipient / Ecology Share

Funding Distribution Name	Recipient Match %	Recipient Share	Ecology Share	Total
Spokane Basin Toxics Reduction	0.00 %	$ 0.00	$ 214,000.00	$ 214,000.00
Total		**$ 0.00**	**$ 214,000.00**	**$ 214,000.00**

AGREEMENT SPECIFIC TERMS AND CONDITIONS

N/A

SPECIAL TERMS AND CONDITIONS

Agreement Conditions

Columbia River Basin Restoration Program
EPA Programmatic Conditions

The RECIPIENT agrees to comply with the current EPA general terms and conditions https://www.epa.gov/grants/epa-general-terms-and-conditions-effective-october-1-2023-or-later and outlined below. These terms and conditions are in addition to the assurances and certifications made as part of the award and terms, conditions or restrictions reflected on the official assistance award document.

The RECIPIENT shall review and comply with any applicable statutes, regulations, and executive orders in https://www.epa.gov/grants/epa-subaward-cross-cutter-requirements.

A. Competency of Organizations Generating Environmental Measurement Data
In accordance with Agency Policy Directive Number FEM-2012-02, Policy to Assure the Competency of Organizations Generating Environmental Measurement Data under Agency-Funded Assistance Agreements, RECIPIENT agrees, by entering into this Agreement, that it has demonstrated competency prior to award, or alternatively, where a pre-award demonstration of competency is not practicable, RECIPIENT agrees to demonstrate competency prior to carrying out any activities under the award involving the generation or use of environmental data. RECIPIENT shall maintain competency for the duration of the project period of this Agreement and this will be documented during the annual reporting process. A copy of the Policy is available online at https://www.epa.gov/sites/production/files/2015-03/documents/competency-policy-aaia-new.pdf or a copy may also be requested by contacting the EPA Project Officer for this award.
B. Quality Assurance – Quality Assurance Requirements (2 CFR 1500.11)
Authority: Quality Assurance applies to all assistance agreements involving environmental information as defined in 2 C.F.R. § 1500.12 Quality Assurance.
ECOLOGY shall ensure that projects involving environmental information issued under this Agreement include appropriate quality requirements for the work. ECOLOGY shall ensure RECIPIENTS develop and implement one of

the following Quality Assurance (QA) planning documents in accordance with this term and condition; and/or ensure subaward recipients implement all applicable approved QA planning documents.

1. Quality Management Plan (QMP)

a. Prior to beginning environmental information operations, the RECIPIENT must:

i. Develop a QMP,

ii. Prepare the QMP in accordance with the current version of EPA's Quality Management Plan (QMP) Standard.

iii. Submit the QMP for EPA review, and

iv. Obtain EPA Quality Assurance Manager or designee (hereafter referred to as QAM) approval.

OR

i. Submit a previously EPA-approved and current QMP,

ii. The EPA Quality Assurance Manager or designee (hereafter referred to as QAM) will notify the recipient and EPA Project Officer (PO) in writing if the QMP is acceptable for this Agreement.

b. The RECIPIENT must submit the QMP no more than 120 days after grant award.

c. The RECIPIENT must review their approved QMP annually. These documented reviews shall be made available to the sponsoring EPA organization if requested. When necessary, the RECIPIENT shall revise its QMP to incorporate minor changes and notify the EPA PO and QAM of the changes. If significant changes have been made to the Quality Program that affect the performance of environmental information operations, it may be necessary to re-submit the entire QMP for re-approval. In general, a copy of any QMP revision(s) made during the year should be submitted to the EPA PO and QAM in writing when such changes occur. Conditions requiring the revision and resubmittal of an approved QMP can be found in section 6 of EPA's Quality Management Plan (QMP) Standard.

2. Quality Assurance Project Plan (QAPP)

a. Prior to beginning environmental information operations, the RECIPIENT must:

i. Develop a QAPP,

ii. Prepare QAPP in accordance with the current version of EPA's Quality Assurance Project Plan (QAPP) Standard

iii. Submit the document for EPA review, and

iv. Obtain EPA Quality Assurance Manager or designee (hereafter referred to as QAM) approval.

OR

i. Submit a previously EPA-approved QAPP proposed to ensure the collected, produced, evaluated, or used environmental information is of known and documented quality for the intended use(s).

ii. The EPA Quality Assurance Manager or designee (hereafter referred to as QAM) will notify the recipient and EPA Project Officer (PO) in writing if the previously EPA-approved QAPP is acceptable for this Agreement.

OR

i. Provide EPA a copy of the recipient-approved QAPP if the RECIPIENT has an EPA-approved Quality Management Plan and a current EPA delegation to review and approve QAPPs.

b. ECOLOGY must submit the QAPP no more than 120 days after grant award.

c. The RECIPIENT shall notify the PO and QAM when substantive changes are needed to the QAPP. EPA may require the QAPP be updated and re-submitted for approval.

d. The RECIPIENT must review their approved QAPP annually. The results of the QAPP review and any revisions must be submitted to the PO and the QAM annually and may also be submitted when changes occur.

For Reference:

• Quality Management Plan (QMP) Standard and EPA's Quality Assurance Project Plan (QAPP) Standard contain quality specifications for EPA and non-EPA organizations and definitions applicable to these terms and conditions.

• EPA QA/G-5: Guidance for Quality Assurance Project Plans

• EPA's Quality Program website has a list of QA managers, and Non-EPA Organizations Quality Specifications.

• The Office of Grants and Debarment Implementation of Quality Assurance Requirements for Organizations receiving EPA Financial Assistance

C. Use of Logos

If the EPA logo is appearing along with logos from other participating entities on websites, outreach materials, or reports, it must not be prominently displayed to imply that any of the recipient or subrecipient's activities are being conducted by the EPA. Instead, the EPA logo should be accompanied by a statement indicating that the [Washington Department of Ecology or subrecipient NAME] received financial support from the EPA under an Assistance Agreement. More information is available at: https://www.epa.gov/stylebook/using-epa-seal-and-logo#policy

D. Geospatial Data Standards

All geospatial data created must be consistent with Federal Geographic Data Committee (FGDC) endorsed standards. Information on these standards may be found at www.fgdc.gov.

E. WQX Requirement (Updated STORET Condition – Water Quality Exchange Replaces STORET)

RECIPIENTS are required to institute standardized reporting requirements into their work plans and include such costs in their budgets. All water quality data generated in accordance with an EPA approved Quality Assurance Project Plan as a result of this assistance Agreement, either directly or by subaward, will be required to be transmitted into the Water Quality Portal (WQP) using either WQX or WQX web. Water quality data appropriate for the Water Quality Portal (WQP) include physical, chemical, and biological sample results for water, sediment and fish tissue. The data will include toxicity data, microbiological data, and the metrics and indices generated from biological and habitat data. The Water Quality Exchange (WQX) is the water data schema associated with the EPA, State and Tribal Exchange Network. Using the WQX schema partners map their database structure to the Water Quality Portal structure. WQX web is a web-based tool to convert data into the WQX format for smaller data generators that are not direct partners on the Exchange Network. More information about WQX, WQX web, and the Water Quality Portal, including tutorials, can be found at https://www.epa.gov/waterdata/water-quality-data-wqx . If activities submitted match for this federal assistance Agreement involve the generation of water quality data, the resulting information must be publicly accessible (in the Water Quality Portal or some other database). RECIPIENTS are encouraged to develop a cross walk between any non-WQX database utilized for the storage of water quality data associated with match activities and EPA's Water Quality Exchange (WQX).

F. Investing in America Signage Required Term and Condition (Updated May 11, 2023)

This Term & Condition applies to (1) construction and infrastructure projects funded in whole or in part by the Infrastructure Investment and Jobs Act (IIJA) and (2) construction and infrastructure projects funded in whole or in part by the Inflation Reduction Act (IRA).

1. Signage Requirements

a. Investing in America Emblem: The RECIPIENT will ensure that a sign is placed at construction sites supported in whole or in part by this award displaying the official Investing in America emblem and must identify the project as a “project funded by President Biden's Bipartisan Infrastructure Law” or “project funded by President Biden's Inflation Reduction Act” as applicable. The sign must be placed at construction sites in an easily visible location that can be directly linked to the work taking place and must be maintained in good condition throughout the construction period. The RECIPIENT will ensure compliance with the guidelines and design specifications provided by EPA for using the official Investing in America emblem available at: https:
//www.epa.gov/invest/investingamerica-signage.

b. Procuring Signs: Consistent with section 6002 of RCRA, 42 U.S.C. 6962, and 2 CFR 200.323, RECIPIENTS are encouraged to use recycled or recovered materials when procuring signs. Signage costs are considered an allowable cost under this assistance agreement provided that the costs associated with signage are reasonable. Additionally, to increase public awareness of projects serving communities where English is not the predominant language, RECIPIENTS are encouraged to translate the language on signs (excluding the official Investing in America emblem or EPA logo or seal) into the appropriate non-English language(s). The costs of such translation are allowable, provided the costs are reasonable.

G. Public or Media Events

ECOLOGY encourages the RECIPIENT to notify ECOLOGY of public or media events publicizing the accomplishment of significant events related to construction projects as a result of this Agreement and provide the

opportunity for attendance and participation by federal representatives with at least ten (10) working days' notice.
H. Build America, Buy America (applicable to all funding from May 14, 2022, and forward)
The RECIPIENT is subject to the Buy America Sourcing requirements under the Build America, Buy America provisions of the Infrastructure Investment and Jobs Act (IIJA) (P.L. 117-58, §§70911-70917) for the types of infrastructure projects under the EPA program and activities specified in EPA's Identification of Federal Financial Assistance Infrastructure Programs Subject to the Build America, Buy America Provisions of the Infrastructure Investment and Jobs Act. None of the funds provided under this award may be used for a project of infrastructure unless all iron and steel, manufactured products, and construction materials that are consumed in, incorporated into, or affixed to an infrastructure project are produced in the United States. The Buy America preference requirement applies to an entire infrastructure project, even if it is funded by both Federal and non- Federal funds. The RECIPIENT must implement these requirements in its procurements, and these requirements must flow down to all subawards and contracts at any tier. For legal definitions and sourcing requirements, the RECIPIENT must consult EPA's Build America, Buy America website and the Office of Management and Budget's (OMB) Memorandum M-22-11, Initial Implementation Guidance on Application of Buy America Preference in Federal Financial Assistance Programs for Infrastructure.
1. When supported by rationale provided in IIJA §70914, the RECIPIENT may submit a waiver request to EPA. RECIPIENTS should request guidance on the submission instructions of an EPA waiver request from the EPA Project Officer for this Agreement. A list of approved EPA waivers (general applicability and project specific) is available on the EPA Build America, Buy America website.
2. For questions regarding the applicability of the Build America, Buy America Act requirements to this assistance Agreement or if there is an approved waiver in place, please contact the EPA Project Officer for this Agreement.

I. Information Collection Requirements

The RECIPIENT agrees to comply with the requirements of the Paperwork Reduction Act in completing the project. If the scope of work includes a survey, a questionnaire or similar information-gathering activity, the Paperwork Reduction Act of 1995 (44 U.S.C. 3501 et seq.), requires ECOLOGY clearance prior to the RECIPIENT'S collection of information by means of identical questions posed to 10 or more persons.
The RECIPIENT will provide to the ECOLOGY Project Manager the following information: (1) description of the information to be collected; (2) explanation of the need for the information; and (3) to whom the survey is being directed.

J. Recognition of EPA Funding
The RECIPIENT agrees that all reports, documents, signage, videos, or other media, developed as part of this Agreement shall contain the following statement:
"This project has been funded wholly or in part by the United States Environmental Protection Agency under assistance agreement PC-01J95801-2 to the Washington State Department of Ecology. The contents of this document do not necessarily reflect the views and policies of the Environmental Protection Agency, nor does mention of trade names or commercial products constitute endorsement or recommendation for use."

K. Riparian Buffers

Riparian buffer restoration projects in agricultural areas shall be consistent with the current Water Quality Combined Funding Program guidelines. The RECIPIENT shall submit in writing a projects' consistency with the recommendations referenced above. When developing project proposals, the RECIPIENT should consider the extent to which proposals include appropriate riparian buffers or otherwise address pollution sources on other water courses

on the properties in the project area to support water quality and salmon recovery. Deviations can only be obtained through an exception approved by ECOLOGY. In order for ECOLOGY to evaluate a request for an exception, the RECIPIENT must submit the scientific rationale demonstrating adequacy of buffers for supporting water quality and salmon recovery. The request must summarize tribal input on the scientific rationale or other relevant issues. The scientific rationale could be developed from sources such as site-specific assessment data, salmon recovery plans, Total Maximum Daily Loads (TMDLs) and the state nonpoint plan. ECOLOGY will confer with EPA, the National Oceanic and Atmospheric Administration (NOAA) and the Washington Department of Ecology and provide the opportunity for affected tribes to consult with ECOLOGY before making a final decision on a deviation request.

L. Cybersecurity

(a) The RECIPIENT agrees that when collecting and managing environmental data under this Agreement, it will protect the data by following all applicable State law cybersecurity requirements.
(b) (1) ECOLOGY must ensure that any connections between the RECIPIENT's network or information system and ECOLOGY networks used by the RECIPIENT to transfer data under this Agreement, are secure.

For purposes of this Section, a connection is defined as a dedicated persistent interface between an Agency IT system and an external IT system for the purpose of transferring information. Transitory, user-controlled connections such as website browsing are excluded from this definition.

If the RECIPIENT's connections as defined above do not go through the Environmental Information Exchange Network or EPA's Central Data Exchange, the RECIPIENT agrees to contact the ECOLOGY Project Manager and work with the designated Regional/Headquarters Information Security Officer to ensure that the connections meet ECOLOGY security requirements, including entering into Interconnection Service Agreements as appropriate. This condition does not apply to manual entry of data by the RECIPIENT into systems operated and used by ECOLOGY and EPA's regulatory programs for the submission of reporting and/or compliance data.

(2) The RECIPIENT agrees that any subawards it makes under this agreement will require the subrecipient to comply with the requirements in (b)(1) if the subrecipient's network or information system is connected to EPA networks to transfer data to the Agency using systems other than the Environmental Information Exchange Network or EPA's Central Data Exchange. The RECIPIENT will be in compliance with this condition: by including this requirement in subaward agreements; and during subrecipient monitoring deemed necessary by the recipient under 2 CFR 200.331(d), by inquiring whether the subrecipient has contacted the ECOLOGY Project Manager. Nothing in this condition requires the RECIPIENT to contact ECOLOGY Project Manager on behalf of a subrecipient or to be involved in the negotiation of an Interconnection Service Agreement between the subrecipient and the ECOLOGY.

GENERAL FEDERAL CONDITIONS

If a portion or all of the funds for this agreement are provided through federal funding sources or this agreement is used to match a federal grant award, the following terms and conditions apply to you.

A. CERTIFICATION REGARDING SUSPENSION, DEBARMENT, INELIGIBILITY OR VOLUNTARY EXCLUSION:

1. The RECIPIENT/CONTRACTOR, by signing this agreement, certifies that it is not suspended, debarred, proposed for debarment, declared ineligible or otherwise excluded from contracting with the federal government, or from receiving contracts paid for with federal funds. If the RECIPIENT/CONTRACTOR is unable to certify to the statements contained in the certification, they must provide an explanation as to why they cannot.

2. The RECIPIENT/CONTRACTOR shall provide immediate written notice to ECOLOGY if at any time the RECIPIENT/CONTRACTOR learns that its certification was erroneous when submitted or had become erroneous by reason of changed circumstances.
3. The terms covered transaction, debarred, suspended, ineligible, lower tier covered transaction, participant, person, primary covered transaction, principal, proposal, and voluntarily excluded, as used in this clause, have the meaning set out in the Definitions and Coverage sections of rules implementing Executive Order 12549. You may contact ECOLOGY for assistance in obtaining a copy of those regulations.
4. The RECIPIENT/CONTRACTOR agrees it shall not knowingly enter into any lower tier covered transaction with a person who is proposed for debarment under the applicable Code of Federal Regulations, debarred, suspended, declared ineligible, or voluntarily excluded from participation in this covered transaction.
5. The RECIPIENT/CONTRACTOR further agrees by signing this agreement, that it will include this clause titled "CERTIFICATION REGARDING SUSPENSION, DEBARMENT, INELIGIBILITY OR VOLUNTARY EXCLUSION" without modification in all lower tier covered transactions and in all solicitations for lower tier covered transactions.
6. Pursuant to 2CFR180.330, the RECIPIENT/CONTRACTOR is responsible for ensuring that any lower tier covered transaction complies with certification of suspension and debarment requirements.
7. RECIPIENT/CONTRACTOR acknowledges that failing to disclose the information required in the Code of Federal Regulations may result in the delay or negation of this funding agreement, or pursuance of legal remedies, including suspension and debarment.
8. RECIPIENT/CONTRACTOR agrees to keep proof in its agreement file, that it, and all lower tier recipients or contractors, are not suspended or debarred, and will make this proof available to ECOLOGY before requests for reimbursements will be approved for payment. RECIPIENT/CONTRACTOR must run a search in <http://www.sam.gov> and print a copy of completed searches to document proof of compliance.

B. FEDERAL FUNDING ACCOUNTABILITY AND TRANSPARENCY ACT (FFATA) REPORTING REQUIREMENTS:

CONTRACTOR/RECIPIENT must complete the FFATA Data Collection Form (ECY 070-395) and return it with the signed agreement to ECOLOGY.

Any CONTRACTOR/RECIPIENT that meets each of the criteria below must report compensation for its five top executives using the FFATA Data Collection Form.

- Receives more than $30,000 in federal funds under this award.
- Receives more than 80 percent of its annual gross revenues from federal funds.
- Receives more than $25,000,000 in annual federal funds.

Ecology will not pay any invoices until it has received a completed and signed FFATA Data Collection Form. Ecology is required to report the FFATA information for federally funded agreements, including the required Unique Entity Identifier in www.sam.gov <http://www.sam.gov/> within 30 days of agreement signature. The FFATA information will be available to the public at www.usaspending.gov <http://www.usaspending.gov/>.

For more details on FFATA requirements, see www.fsrs.gov <http://www.fsrs.gov/>.

C. FEDERAL FUNDING PROHIBITION ON CERTAIN TELECOMMUNICATIONS OR VIDEO SURVEILLANCE SERVICES OR EQUIPMENT:

As required by 2 CFR 200.216, federal grant or loan recipients and subrecipients are prohibited from obligating or

expending loan or grant funds to:

1. Procure or obtain;
2. Extend or renew a contract to procure or obtain; or
3. Enter into a contract (or extend or renew a contract) to procure or obtain equipment, services, or systems that use covered telecommunications equipment, video surveillance services or services as a substantial or essential component of any system, or as critical technology as part of any system. As described in Public Law 115-232 <https://www.govinfo.gov/content/pkg/PLAW-115publ232/pdf/PLAW-115publ232.pdf>, section 889, covered telecommunications equipment is telecommunications equipment produced by Huawei Technologies Company or ZTE Corporation (or any subsidiary or affiliate of such entities).

Recipients, subrecipients, and borrowers also may not use federal funds to purchase certain prohibited equipment, systems, or services, including equipment, systems, or services produced or provided by entities identified in section 889, are recorded in the System for Award Management (SAM) <https://sam.gov/SAM/> exclusion list.

GENERAL TERMS AND CONDITIONS

Pertaining to Grant and Loan Agreements With the state of Washington, Department of Ecology

GENERAL TERMS AND CONDITIONS
For DEPARTMENT OF ECOLOGY GRANTS and LOANS
03/11/2026 Version

1. ADMINISTRATIVE REQUIREMENTS

a) RECIPIENT shall follow the "Administrative Requirements for Recipients of Ecology Grants and Loans – EAGL Edition." https://apps.ecology.wa.gov/publications/UIPages/SummaryPages/2601001.html
b) RECIPIENT shall complete all activities funded by this Agreement and be fully responsible for the proper management of all funds and resources made available under this Agreement.
c) RECIPIENT agrees to take complete responsibility for all actions taken under this Agreement, including ensuring all subgrantees and contractors comply with the terms and conditions of this Agreement. ECOLOGY reserves the right to request proof of compliance by subgrantees and contractors.
d) RECIPIENT's activities under this Agreement shall be subject to the review and approval by ECOLOGY for the extent and character of all work and services.

2. AMENDMENTS AND MODIFICATIONS

This Agreement may be altered, amended, or waived only by a written amendment executed by both parties. No subsequent modification(s) or amendment(s) of this Agreement will be of any force or effect unless in writing and signed by authorized representatives of both parties. ECOLOGY and the RECIPIENT may change their respective staff contacts and administrative information without the concurrence of either party.

3. ACCESSIBILITY REQUIREMENTS FOR COVERED TECHNOLOGY

The RECIPIENT must comply with the Washington State Office of the Chief Information Officer, OCIO Policy no. 188, Accessibility (https://ocio.wa.gov/policy/accessibility) as it relates to "covered technology." This requirement applies to all products supplied under the Agreement, providing equal access to information technology by individuals with disabilities, including and not limited to web sites/pages, web-based applications, software systems, video and audio content, and electronic documents intended for publishing on Ecology's public web site.

4. ARCHAEOLOGICAL AND CULTURAL RESOURCES

RECIPIENT shall take all reasonable action to avoid, minimize, or mitigate adverse effects to archaeological and historic archaeological sites, historic buildings/structures, traditional cultural places, sacred sites, or other cultural resources, hereby referred to as Cultural Resources.
The RECIPIENT must agree to hold harmless ECOLOGY in relation to any claim related to Cultural Resources discovered, disturbed, or damaged due to the RECIPIENT's project funded under this Agreement.
RECIPIENT shall:
a) Contact the ECOLOGY Program issuing the grant or loan to discuss any Cultural Resources requirements for their project:
• Cultural Resource Consultation and Review should be initiated early in the project planning process and must be completed prior to expenditure of Agreement funds as required by applicable State and Federal requirements.
* For state funded construction, demolition, or land acquisitions, comply with Governor Executive Order 21-02, Archaeological and Cultural Resources.
• For projects with any federal involvement, comply with the National Historic Preservation Act of 1966 (Section 106).

b) If required by the ECOLOGY Program, submit an Inadvertent Discovery Plan (IDP) to ECOLOGY prior to implementing any project that involves field activities. ECOLOGY will provide the IDP form.
RECIPIENT shall:
• Keep the IDP at the project site.
• Make the IDP readily available to anyone working at the project site.
• Discuss the IDP with staff, volunteers, and contractors working at the project site.
• Implement the IDP when Cultural Resources or human remains are found at the project site.
c) If any Cultural Resources are found while conducting work under this Agreement, follow the protocol outlined in the project IDP.
• Immediately stop work and notify the ECOLOGY Program, who will notify the Department of Archaeology and Historic Preservation at (360) 586-3065, any affected Tribe, and the local government.
d) If any human remains are found while conducting work under this Agreement, follow the protocol outlined in the project IDP.
• Immediately stop work and notify the local Law Enforcement Agency or Medical Examiner/Coroner's Office, the Department of Archaeology and Historic Preservation at (360) 790-1633, and then the ECOLOGY Program.
e) Comply with RCW 27.53, RCW 27.44, and RCW 68.50.645, and all other applicable local, state, and federal laws protecting Cultural Resources and human remains.

5. ASSIGNMENT
No right or claim of the RECIPIENT arising under this Agreement shall be transferred or assigned by the RECIPIENT.

6. COMMUNICATION
RECIPIENT shall make every effort to maintain effective communications with the RECIPIENT's designees, ECOLOGY, all affected local, state, or federal jurisdictions, and any interested individuals or groups.

7. COMPENSATION
a) Any work performed prior to effective date of this Agreement will be at the sole expense and risk of the RECIPIENT. ECOLOGY must sign the Agreement before any payment requests can be submitted.
b) Payments will be made on a reimbursable basis for approved and completed work as specified in this Agreement.
c) RECIPIENT is responsible to determine if costs are eligible. Any questions regarding eligibility should be clarified with ECOLOGY prior to incurring costs. Costs that are conditionally eligible require approval by ECOLOGY prior to expenditure.
d) RECIPIENT shall not invoice more than once per month unless agreed on by ECOLOGY.
e) ECOLOGY will not process payment requests without the proper reimbursement forms, Progress Report and supporting documentation. ECOLOGY will provide instructions for submitting payment requests.
f) ECOLOGY will pay the RECIPIENT thirty (30) days after receipt of a properly completed request for payment.
g) RECIPIENT will receive payment through Washington State's Office of Financial Management's Statewide Payee Desk. To receive payment you must register as a statewide vendor by submitting a statewide vendor registration form and an IRS W-9 form at website, https://ofm.wa.gov/tech-support/statewide-vendor-payee-services/. If you have questions about the vendor registration process, you can contact Statewide Payee Help Desk at (360) 407-8180 or email SupplierRegistration@ofm.wa.gov.
h) ECOLOGY may, at its sole discretion, withhold payments claimed by the RECIPIENT if the RECIPIENT fails to satisfactorily comply with any term or condition of this Agreement.
i) Monies withheld by ECOLOGY may be paid to the RECIPIENT when the work described herein, or a portion thereof, has been completed if, at ECOLOGY's sole discretion, such payment is reasonable and approved according to this Agreement, as appropriate, or upon completion of an audit as specified herein.

j) RECIPIENT must submit within thirty (30) days after the expiration date of this Agreement, all financial, performance, and other reports required by this Agreement. Failure to comply may result in delayed reimbursement.

8. COMPLIANCE WITH ALL LAWS

RECIPIENT agrees to comply fully with all applicable federal, state and local laws, orders, regulations, and permits related to this Agreement, including but not limited to:

a) RECIPIENT agrees to comply with all applicable laws, regulations, and policies of the United States and the State of Washington which affect wages and job safety.

b) RECIPIENT agrees to be bound by all applicable federal and state laws, regulations, and policies against discrimination.

c) RECIPIENT certifies full compliance with all applicable state industrial insurance requirements.

d) RECIPIENT agrees to secure and provide assurance to ECOLOGY that all the necessary approvals and permits required by authorities having jurisdiction over the project are obtained. RECIPIENT must include time in their project timeline for the permit and approval processes.

ECOLOGY shall have the right to immediately terminate for cause this Agreement as provided herein if the RECIPIENT fails to comply with above requirements.

If any provision of this Agreement violates any statute or rule of law of the state of Washington, it is considered modified to conform to that statute or rule of law.

9. CONFLICT OF INTEREST

RECIPIENT and ECOLOGY agree that any officer, member, agent, or employee, who exercises any function or responsibility in the review, approval, or carrying out of this Agreement, shall not have any personal or financial interest, direct or indirect, nor affect the interest of any corporation, partnership, or association in which he/she is a part, in this Agreement or the proceeds thereof.

10. CONTRACTING FOR GOODS AND SERVICES

RECIPIENT may contract to buy goods or services related to its performance under this Agreement. RECIPIENT shall award all contracts for construction, purchase of goods, equipment, services, and professional architectural and engineering services through a competitive process, if required by State law. RECIPIENT is required to follow procurement procedures that ensure legal, fair, and open competition.

RECIPIENT must have a standard procurement process or follow current state procurement procedures. RECIPIENT may be required to provide written certification that they have followed their standard procurement procedures and applicable state law in awarding contracts under this Agreement.

ECOLOGY reserves the right to inspect and request copies of all procurement documentation, and review procurement practices related to this Agreement. Any costs incurred as a result of procurement practices not in compliance with state procurement law or the RECIPIENT's normal procedures may be disallowed at ECOLOGY's sole discretion.

11. DISPUTES

When there is a dispute with regard to the extent and character of the work, or any other matter related to this Agreement the determination of ECOLOGY will govern, although the RECIPIENT shall have the right to appeal decisions as provided for below:

a) RECIPIENT notifies the funding program of an appeal request.

b) Appeal request must be in writing and state the disputed issue(s).

c) RECIPIENT has the opportunity to be heard and offer evidence in support of its appeal.

d) ECOLOGY reviews the RECIPIENT's appeal.

e) ECOLOGY sends a written answer within ten (10) business days, unless more time is needed, after concluding the

review.
The decision of ECOLOGY from an appeal will be final and conclusive, unless within thirty (30) days from the date of such decision, the RECIPIENT furnishes to the Director of ECOLOGY a written appeal. The decision of the Director or duly authorized representative will be final and conclusive.
The parties agree that this dispute process will precede any action in a judicial or quasi-judicial tribunal.
Appeals of the Director's decision will be brought in the Superior Court of Thurston County. Review of the Director's decision will not be taken to Environmental and Land Use Hearings Office.
Pending final decision of a dispute, the RECIPIENT agrees to proceed diligently with the performance of this Agreement and in accordance with the decision rendered.
Nothing in this Agreement will be construed to limit the parties' choice of another mutually acceptable method, in addition to the dispute resolution procedure outlined above.

12. ENVIRONMENTAL DATA STANDARDS

a) RECIPIENT shall prepare a Quality Assurance Project Plan (QAPP) for a project that collects or uses environmental measurement data. RECIPIENTS unsure about whether a QAPP is required for their project shall contact the ECOLOGY Program issuing the grant or loan. If a QAPP is required, the RECIPIENT shall:
• Use ECOLOGY's QAPP Template/Checklist provided by the ECOLOGY, unless ECOLOGY Quality Assurance (QA) officer or the Program QA coordinator instructs otherwise.
• Follow ECOLOGY's Guidelines for Preparing Quality Assurance Project Plans for Environmental Studies, July 2004 (Ecology Publication No. 04-03-030).
• Submit the QAPP to ECOLOGY for review and approval before the start of the work.
b) RECIPIENT shall submit environmental data that was collected on a project to ECOLOGY using the Environmental Information Management system (EIM), unless the ECOLOGY Program instructs otherwise. The RECIPIENT must confirm with ECOLOGY that complete and correct data was successfully loaded into EIM, find instructions at: http://www.ecy.wa.gov/eim.
c) RECIPIENT shall follow ECOLOGY's data standards when Geographic Information System (GIS) data is collected and processed. Guidelines for Creating and Accessing GIS Data are available at: https://ecology.wa.gov/Research-Data/Data-resources/Geographic-Information-Systems-GIS/Standards. RECIPIENT, when requested by ECOLOGY, shall provide copies to ECOLOGY of all final GIS data layers, imagery, related tables, raw data collection files, map products, and all metadata and project documentation.

13. GOVERNING LAW

This Agreement will be governed by the laws of the State of Washington, and the venue of any action brought hereunder will be in the Superior Court of Thurston County.

14. INDEMNIFICATION

ECOLOGY will in no way be held responsible for payment of salaries, consultant's fees, and other costs related to the project described herein, except as provided in the Scope of Work.
To the extent that the Constitution and laws of the State of Washington permit, each party will indemnify and hold the other harmless from and against any liability for any or all injuries to persons or property arising from the negligent act or omission of that party or that party's agents or employees arising out of this Agreement.

15. INDEPENDENT STATUS

The employees, volunteers, or agents of each party who are engaged in the performance of this Agreement will continue to be employees, volunteers, or agents of that party and will not for any purpose be employees, volunteers, or agents of the other party.

16. KICKBACKS

RECIPIENT is prohibited from inducing by any means any person employed or otherwise involved in this Agreement to give up any part of the compensation to which he/she is otherwise entitled to or receive any fee, commission, or gift in return for award of a subcontract hereunder.

17. MINORITY AND WOMEN'S BUSINESS ENTERPRISES (MWBE)

RECIPIENT is encouraged to solicit and recruit, to the extent possible, certified minority-owned (MBE) and women-owned (WBE) businesses in purchases and contracts initiated under this Agreement.
Contract awards or rejections cannot be made based on MWBE participation; however, the RECIPIENT is encouraged to take the following actions, when possible, in any procurement under this Agreement:
a) Include qualified minority and women's businesses on solicitation lists whenever they are potential sources of goods or services.
b) Divide the total requirements, when economically feasible, into smaller tasks or quantities, to permit maximum participation by qualified minority and women's businesses.
c) Establish delivery schedules, where work requirements permit, which will encourage participation of qualified minority and women's businesses.
d) Use the services and assistance of the Washington State Office of Minority and Women's Business Enterprises (OMWBE) (866-208-1064) and the Office of Minority Business Enterprises of the U.S. Department of Commerce, as appropriate.

18. ORDER OF PRECEDENCE

In the event of inconsistency in this Agreement, unless otherwise provided herein, the inconsistency shall be resolved by giving precedence in the following order: (a) applicable federal and state statutes and regulations; (b) The Agreement; (c) Scope of Work; (d) Special Terms and Conditions; (e) Any provisions or terms incorporated herein by reference, including the "Administrative Requirements for Recipients of Ecology Grants and Loans"; (f) Ecology Funding Program Guidelines; and (g) General Terms and Conditions.

19. PRESENTATION AND PROMOTIONAL MATERIALS

ECOLOGY reserves the right to approve RECIPIENT's communication documents and materials related to the fulfillment of this Agreement:
a) If requested, RECIPIENT shall provide a draft copy to ECOLOGY for review and approval ten (10) business days prior to production and distribution.
b) RECIPIENT shall include time for ECOLOGY's review and approval process in their project timeline.
c) If requested, RECIPIENT shall provide ECOLOGY two (2) final copies and an electronic copy of any tangible products developed.
Copies include any printed materials, and all tangible products developed such as brochures, manuals, pamphlets, videos, audio tapes, CDs, curriculum, posters, media announcements, or gadgets with a message, such as a refrigerator magnet, and any online communications, such as web pages, blogs, and twitter campaigns. If it is not practical to provide a copy, then the RECIPIENT shall provide a description (photographs, drawings, printouts, etc.) that best represents the item.
Any communications intended for public distribution that uses ECOLOGY's logo shall comply with ECOLOGY's graphic requirements and any additional requirements specified in this Agreement. Before the use of ECOLOGY's logo contact ECOLOGY for guidelines.
RECIPIENT shall acknowledge in the communications that funding was provided by ECOLOGY.

20. PROGRESS REPORTING

a) RECIPIENT must satisfactorily demonstrate the timely use of funds by submitting payment requests and progress

reports to ECOLOGY. ECOLOGY reserves the right to amend or terminate this Agreement if the RECIPIENT does not document timely use of funds.
b) RECIPIENT must submit a progress report with each payment request. Payment requests will not be processed without a progress report. ECOLOGY will define the elements and frequency of progress reports.
c) RECIPIENT shall use ECOLOGY's provided progress report format.
d) Quarterly progress reports will cover the periods from January 1 through March 31, April 1 through June 30, July 1 through September 30, and October 1 through December 31. Reports shall be submitted within thirty (30) days after the end of the quarter being reported.
e) RECIPIENT must submit within thirty (30) days of the expiration date of the project, unless an extension has been approved by ECOLOGY, all financial, performance, and other reports required by the Agreement and funding program guidelines. RECIPIENT shall use the ECOLOGY provided closeout report format.

21. PROPERTY RIGHTS

a) Copyrights and Patents. When the RECIPIENT creates any copyrightable materials or invents any patentable property under this Agreement, the RECIPIENT may copyright or patent the same but ECOLOGY retains a royalty free, nonexclusive, and irrevocable license to reproduce, publish, recover, or otherwise use the material(s) or property, and to authorize others to use the same for federal, state, or local government purposes.
b) Publications. When the RECIPIENT or persons employed by the RECIPIENT use or publish ECOLOGY information; present papers, lectures, or seminars involving information supplied by ECOLOGY; or use logos, reports, maps, or other data in printed reports, signs, brochures, pamphlets, etc., appropriate credit shall be given to ECOLOGY.
c) Presentation and Promotional Materials. ECOLOGY shall have the right to use or reproduce any printed or graphic materials produced in fulfillment of this Agreement, in any manner ECOLOGY deems appropriate. ECOLOGY shall acknowledge the RECIPIENT as the sole copyright owner in every use or reproduction of the materials.
d) Tangible Property Rights. ECOLOGY's current edition of "Administrative Requirements for Recipients of Ecology Grants and Loans," shall control the use and disposition of all real and personal property purchased wholly or in part with funds furnished by ECOLOGY in the absence of state and federal statutes, regulations, or policies to the contrary, or upon specific instructions with respect thereto in this Agreement.
e) Personal Property Furnished by ECOLOGY. When ECOLOGY provides personal property directly to the RECIPIENT for use in performance of the project, it shall be returned to ECOLOGY prior to final payment by ECOLOGY. If said property is lost, stolen, or damaged while in the RECIPIENT's possession, then ECOLOGY shall be reimbursed in cash or by setoff by the RECIPIENT for the fair market value of such property.
f) Acquisition Projects. The following provisions shall apply if the project covered by this Agreement includes funds for the acquisition of land or facilities:
1. RECIPIENT shall establish that the cost is fair value and reasonable prior to disbursement of funds provided for in this Agreement.
2. RECIPIENT shall provide satisfactory evidence of title or ability to acquire title for each parcel prior to disbursement of funds provided by this Agreement. Such evidence may include title insurance policies, Torrens certificates, or abstracts, and attorney's opinions establishing that the land is free from any impediment, lien, or claim which would impair the uses intended by this Agreement.
g) Conversions. Regardless of the Agreement expiration date, the RECIPIENT shall not at any time convert any equipment, property, or facility acquired or developed under this Agreement to uses other than those for which assistance was originally approved without prior written approval of ECOLOGY. Such approval may be conditioned upon payment to ECOLOGY of that portion of the proceeds of the sale, lease, or other conversion or encumbrance which monies granted pursuant to this Agreement bear to the total acquisition, purchase, or construction costs of such property.

22. RECORDS, AUDITS, AND INSPECTIONS

RECIPIENT shall maintain complete program and financial records relating to this Agreement, including any engineering documentation and field inspection reports of all construction work accomplished.
All records shall:
a) Be kept in a manner which provides an audit trail for all expenditures.
b) Be kept in a common file to facilitate audits and inspections.
c) Clearly indicate total receipts and expenditures related to this Agreement.
d) Be open for audit or inspection by ECOLOGY, or by any duly authorized audit representative of the State of Washington, for a period of at least three (3) years after the final grant payment or loan repayment, or any dispute resolution hereunder.
RECIPIENT shall provide clarification and make necessary adjustments if any audits or inspections identify discrepancies in the records.
ECOLOGY reserves the right to audit, or have a designated third party audit, applicable records to ensure that the state has been properly invoiced. Any remedies and penalties allowed by law to recover monies determined owed will be enforced. Repetitive instances of incorrect invoicing or inadequate records may be considered cause for termination.
All work performed under this Agreement and any property and equipment purchased shall be made available to ECOLOGY and to any authorized state, federal or local representative for inspection at any time during the course of this Agreement and for at least three (3) years following grant or loan termination or dispute resolution hereunder.
RECIPIENT shall provide right of access to ECOLOGY, or any other authorized representative, at all reasonable times, in order to monitor and evaluate performance, compliance, and any other conditions under this Agreement.

23. RECOVERY OF FUNDS

The right of the RECIPIENT to retain monies received as reimbursement payments is contingent upon satisfactory performance of this Agreement and completion of the work described in the Scope of Work.
All payments to the RECIPIENT are subject to approval and audit by ECOLOGY, and any unauthorized expenditure(s) or unallowable cost charged to this Agreement shall be refunded to ECOLOGY by the RECIPIENT.
RECIPIENT shall refund to ECOLOGY the full amount of any erroneous payment or overpayment under this Agreement.
RECIPIENT shall refund by check payable to ECOLOGY the amount of any such reduction of payments or repayments within thirty (30) days of a written notice. Interest will accrue at the rate of twelve percent (12%) per year from the time ECOLOGY demands repayment of funds.
Any property acquired under this Agreement, at the option of ECOLOGY, may become ECOLOGY's property and the RECIPIENT's liability to repay monies will be reduced by an amount reflecting the fair value of such property.

24. SEVERABILITY

If any provision of this Agreement or any provision of any document incorporated by reference shall be held invalid, such invalidity shall not affect the other provisions of this Agreement which can be given effect without the invalid provision, and to this end the provisions of this Agreement are declared to be severable.

25. STATE ENVIRONMENTAL POLICY ACT (SEPA)

RECIPIENT must demonstrate to ECOLOGY’s satisfaction that compliance with the requirements of the State Environmental Policy Act (Chapter 43.21C RCW and Chapter 197-11 WAC) have been or will be met. Any reimbursements are subject to this provision.

26. SUSPENSION

When in the best interest of ECOLOGY, ECOLOGY may at any time, and without cause, suspend this Agreement or any portion thereof for a temporary period by written notice from ECOLOGY to the RECIPIENT. RECIPIENT shall resume performance on the next business day following the suspension period unless another day is specified by ECOLOGY.

27. SUSTAINABLE PRACTICES

In order to sustain Washington's natural resources and ecosystems, the RECIPIENT is fully encouraged to implement sustainable practices and to purchase environmentally preferable products under this Agreement.

a) Sustainable practices may include such activities as: use of clean energy, use of double-sided printing, hosting low impact meetings, and setting up recycling and composting programs.

b) Purchasing may include such items as: sustainably produced products and services, EPEAT registered computers and imaging equipment, independently certified green cleaning products, remanufactured toner cartridges, products with reduced packaging, office products that are refillable, rechargeable, and recyclable, 100% post-consumer recycled paper, and toxic free products.

For more suggestions visit the Washington State Procurement Manual web page, Green Purchasing, https://des.wa.gov/purchase/washington-state-procurement-manual/green-purchasing.

28. TERMINATION

a) For Cause

ECOLOGY may terminate for cause this Agreement with a seven (7) calendar days prior written notification to the RECIPIENT, at the sole discretion of ECOLOGY, for failing to perform an Agreement requirement or for a material breach of any term or condition. If this Agreement is so terminated, the parties shall be liable only for performance rendered or costs incurred in accordance with the terms of this Agreement prior to the effective date of termination.

Failure to Commence Work. ECOLOGY reserves the right to terminate this Agreement if RECIPIENT fails to commence work on the project funded within four (4) months after the effective date of this Agreement, or by any date mutually agreed upon in writing for commencement of work, or the time period defined within the Scope of Work.

Non-Performance. The obligation of ECOLOGY to the RECIPIENT is contingent upon satisfactory performance by the RECIPIENT of all of its obligations under this Agreement. In the event the RECIPIENT unjustifiably fails, in the opinion of ECOLOGY, to perform any obligation required of it by this Agreement, ECOLOGY may refuse to pay any further funds, terminate in whole or in part this Agreement, and exercise any other rights under this Agreement. Despite the above, the RECIPIENT shall not be relieved of any liability to ECOLOGY for damages sustained by ECOLOGY and the State of Washington because of any breach of this Agreement by the RECIPIENT. ECOLOGY may withhold payments for the purpose of setoff until such time as the exact amount of damages due ECOLOGY from the RECIPIENT is determined.

b) For Convenience

ECOLOGY may terminate for convenience this Agreement, in whole or in part, for any reason when it is the best interest of ECOLOGY, with a thirty (30) calendar days prior written notification to the RECIPIENT, except as noted below. If this Agreement is so terminated, the parties shall be liable only for performance rendered or costs incurred in accordance with the terms of this Agreement prior to the effective date of termination.

Non-Allocation of Funds. ECOLOGY's ability to make payments is contingent on availability of funding. In the event funding from state, federal or other sources is withdrawn, reduced, or limited in any way after the effective date and prior to the completion or expiration date of this Agreement, ECOLOGY, at its sole discretion, may elect to terminate the Agreement, in whole or part, or renegotiate the Agreement, subject to new funding limitations or conditions. ECOLOGY may also elect to suspend performance of the Agreement until ECOLOGY determines the funding insufficiency is resolved. ECOLOGY may exercise any of these options with no notification or restrictions, although ECOLOGY will make a reasonable attempt to provide notice.

In the event of termination or suspension, ECOLOGY will reimburse eligible costs incurred by the RECIPIENT through the effective date of termination or suspension. Reimbursed costs must be agreed to by ECOLOGY and the RECIPIENT. In no event shall ECOLOGY's reimbursement exceed ECOLOGY's total responsibility under the Agreement and any amendments.

If payments have been discontinued by ECOLOGY due to unavailable funds, the RECIPIENT shall not be obligated to repay monies which had been paid to the RECIPIENT prior to such termination.
RECIPIENT's obligation to continue or complete the work described in this Agreement shall be contingent upon availability of funds by the RECIPIENT's governing body.

c) By Mutual Agreement
ECOLOGY and the RECIPIENT may terminate this Agreement, in whole or in part, at any time, by mutual written agreement.

d) In Event of Termination
All finished or unfinished documents, data studies, surveys, drawings, maps, models, photographs, reports or other materials prepared by the RECIPIENT under this Agreement, at the option of ECOLOGY, will become property of ECOLOGY and the RECIPIENT shall be entitled to receive just and equitable compensation for any satisfactory work completed on such documents and other materials.
Nothing contained herein shall preclude ECOLOGY from demanding repayment of all funds paid to the RECIPIENT in accordance with Recovery of Funds, identified herein.

29. THIRD PARTY BENEFICIARY
RECIPIENT shall ensure that in all subcontracts entered into by the RECIPIENT pursuant to this Agreement, the state of Washington is named as an express third party beneficiary of such subcontracts with full rights as such.

30. WAIVER
Waiver of a default or breach of any provision of this Agreement is not a waiver of any subsequent default or breach, and will not be construed as a modification of the terms of this Agreement unless stated as such in writing by the authorized representative of ECOLOGY.

End of General Terms and Conditions

Agenda Sheet for City Council:

Committee: PIES **Date:** 11/10/2026

Committee Agenda type: Reports, Contracts & Claims

Council Meeting Date: 12/02/2026

Date Rec'd	11/3/2026		
Clerk's File #	OPR 2026-0928		
Cross Ref #			
Project #	2026060		
Submitting Dept	INTEGRATED CAPITAL	**Bid #**	
Contact Name/Phone	LORENA 6894	**Requisition #**	RFQU #6578-26
Contact E-Mail	LCROUCHER@SPOKANECITY.ORG		
Agenda Item Type	Engineer Construction Contract		
Council Sponsor(s)	KKLITZKE		
Sponsoring at Administrators Request	NO		
Lease? NO	**Grant Related?** YES	**Public Works?** NO	
Agenda Item Name	CONTRACT FOR BASELINE PFAS FATE AND TRANSPORT STUDY SUPPORT		

Agenda Wording

Contract Agreement between the City and CDM Smith Inc. to provide support services related to the City's Baseline PFAS Fate and Transport Study in the City's Wastewater System. Services were procured through RFQu #6578-26 and are funded through a Department of Ecology grant.

Summary (Background)

This is a new contract with CDM Smith to provide support services related to a baseline per- and polyfluoroalkyl substances (PFAS) fate and transport study in the City's wastewater system. This study is funded through the Washington State Department of Ecology's Spokane Basin Subaward Funding Program for Fiscal Year 2027 (SFY27). CDM Smith was selected to provide services through RFQu #6578-26. Ten submissions were received, and CDM Smith was selected for award through a committee evaluation process. The proposed scope and fee are attached.

What impacts would the proposal have on historically excluded communities?

Public works services and projects are designed to serve all citizens and businesses. We strive to offer a consistent level of service to all, distribute public investment throughout the community, and respond to gaps in services identified in various City plans.

How will data be collected, analyzed, and reported concerning the effect of the program/policy by racial, ethnic, gender identity, national origin, income level, disability, sexual orientation, or other existing disparities?

n/a

How will data be collected regarding the effectiveness of this program, policy, or product to ensure it is the right solution?

Public Works follows the City's established procurement and public works bidding regulations and policies to bring items forward and then uses contract management best practices to ensure desired outcomes and regulatory compliance.

Describe how this proposal aligns with current City Policies, including the Comprehensive Plan, Sustainability Action Plan, Capital Improvement Program, Neighborhood Master Plans, Council Resolutions, and others?

This work is consistent with annual budget strategies to limit costs and approved projects in the 6-year CIP.

Council Subcommittee Review

n/a

Fiscal Impact

Approved in Current Year Budget?	YES
Total Cost	$ 84,989
Current Year Cost	$ 20,000
Subsequent Year(s) Cost	$ 64,989

Narrative

No fiscal impact to the City as this project is funded through a Department of Ecology grant.

Amount		Budget Account
Expense	$ 84,949	# 4250-30210-38141-54101-99999
Select	$	#
Select	$	#
Select	$	#
Select	$	#
Select	$	#

Funding Source One-Time

Funding Source Type Grant

Is this funding source sustainable for future years, months, etc?

No, this project work is based on availability of grant funding only.

Expense Occurrence

Other budget impacts (revenue generating, match requirements, etc.)

n/a

Approvals		Additional Approvals	
Dept Head	PICANCO, KEVIN	PURCHASING	PRINCE, THEA
Division Director	FEIST, MARLENE	ACCOUNTING -	BROWN, SKYLER
Accounting Manager	KECK, KATHLEEN		
Legal	FAIRBORN, KATHERINE		
For the Mayor	PICCOLO, MIKE		

Distribution List

Jon Kenning, jon.kenning@ecy.wa.gov	icmaccounting@spokanecity.org
tax&licenses@spokanecity.org	lcroucher@spokanecity.org
kpicanco@spokanecity.org	eraea@spokanecity.org

City Clerk's OPR 2026-0928

CITY OF SPOKANE

CONSULTANT AGREEMENT

Title: BASELINE PFAS FATE AND TRANSPORT STUDY

THIS CONSULTANT AGREEMENT is made and entered into by and between the **CITY OF SPOKANE**, a Washington municipal corporation (the "City"), and **CDM SMITH, INC.**, whose address is 14432 SE Eastgate Way, Suite 100, Bellevue, Washington 98007 (the "Consultant"), individually hereafter referenced as a "Party", and together as the "Parties".

WHEREAS, the purpose of this Agreement is for Consultant to perform the Baseline PFAS Fate and Transport Study in City Wastewater System; and

WHEREAS, the Consultant was selected from a Request for Qualifications No. 6578-26.

NOW, THEREFORE, in consideration of the terms, conditions, covenants and performance of the Scope of Work contained herein, the City and Consultant mutually agree as follows:

1. TERM OF AGREEMENT.
The term of this Agreement begins on December 1, 2026, and ends on December 31, 2027, unless amended by written agreement or terminated earlier under the provisions.

2. TIME OF BEGINNING AND COMPLETION.
The Consultant shall begin the work outlined in the "Scope of Work" ("Work") on the beginning date, above. The City will acknowledge in writing when the Work is complete. Time limits established under this Agreement shall not be extended because of delays for which the Consultant is responsible, but may be extended by the City, in writing, for the City's convenience or conditions beyond the Consultant's control.

3. SCOPE OF WORK.
The General Scope of Work for this Agreement is described in the Consultant's Response to RFQ; their Scope of Work attached as Exhibit B; and the Department of Ecology Water Quality Columbia Basin Restoration Agreement No. WQCRBR-2527-Spokan-00011, attached as Exhibit C; and made a part of this Agreement. In the event of a conflict or discrepancy in the contract documents, the City Agreement controls.

The Work is subject to City review and approval. The Consultant shall confer with the City periodically, and prepare and present information and materials (e.g. detailed outline of completed Work) requested by the City to determine the adequacy of the Work or Consultant's progress.

4. COMPENSATION.

Total compensation for Consultant's services under this Agreement shall not exceed **EIGHTY-FOUR THOUSAND NINE HUNDRED EIGHTY-NINE AND NO/100 DOLLARS ($84,989.00)**, plus tax if applicable, unless modified by a written amendment to this Agreement. This is the maximum amount to be paid under this Agreement for the work described in Section 3 above, and shall not be exceeded without the prior written authorization of the City in the form of an executed amendment to this Agreement.

5. PAYMENT.

The Consultant shall submit its applications for payment to City of Spokane Integrated Capitol Management Department, 808 West Spokane Falls Boulevard, 2nd Floor, Spokane, Washington 99201. **Payment will be made via direct deposit/ACH** within thirty (30) days after receipt of the Consultant's application except as provided by state law. If the City objects to all or any portion of the invoice, it shall notify the Consultant and pay that portion of the invoice not in dispute. In that event, the parties shall immediately make every effort to settle the disputed amount.

6. REIMBURSABLES

The reimbursables under this Agreement are to be included, and considered part of the maximum amount not to exceed (above), and require the Consultant's submittal of appropriate documentation and actual itemized receipts, the following limitations apply.

A. City will reimburse the Consultant at actual cost for expenditures that are pre-approved by the City in writing and are necessary and directly applicable to the work required by this Contract provided that similar direct project costs related to the contracts of other clients are consistently accounted for in a like manner. Such direct project costs may not be charged as part of overhead expenses or include a markup. Other direct charges may include, but are not limited to the following types of items: travel, printing, cell phone, supplies, materials, computer charges, and fees of subconsultants.

B. The billing for third party direct expenses specifically identifiable with this project shall be an itemized listing of the charges supported by copies of the original bills, invoices, expense accounts, subconsultant paid invoices, and other supporting documents used by the Consultant to generate invoice(s) to the City. The original supporting documents shall be available to the City for inspection upon request. All charges must be necessary for the services provided under this Contract.

C. The City will reimburse the actual cost for travel expenses incurred as evidenced by copies of receipts (excluding meals) supporting such travel expenses, and in accordance with the City of Spokane Travel Policy, details of which can be provided upon request.

D. **Airfare**: Airfare will be reimbursed at the actual cost of the airline ticket. The City will reimburse for Economy or Coach Fare only. Receipts detailing each airfare are required.

E. **Meals:** Meals will be reimbursed at the Federal Per Diem daily meal rate for the city in which the work is performed. *Receipts <u>are not</u> required as documentation.* The invoice shall state "the meals are being billed at the Federal Per Diem daily meal rate", and shall detail how many of each meal is being billed (e.g. the number of breakfasts, lunches, and dinners). The City will not reimburse for alcohol at any time.

F. **Lodging:** Lodging will be reimbursed at actual cost incurred up to a maximum of the published General Services Administration (GSA) Index for the city in which the work is performed (*the current maximum allowed reimbursement amount can be provided upon request*). Receipts detailing each day / night lodging are

required. The City will not reimburse for ancillary expenses charged to the room (e.g. movies, laundry, mini bar, refreshment center, fitness center, sundry items, etc.)

G. **Vehicle mileage**: Vehicle mileage will be reimbursed at the Federal Internal Revenue Service Standard Business Mileage Rate in affect at the time the mileage expense is incurred. Please note: payment for mileage for long distances traveled will not be more than an equivalent trip round-trip airfare of a common carrier for a coach or economy class ticket.

H. **Rental Car:** Rental car expenses will be reimbursed at the actual cost of the rental. Rental car receipts are required for all rental car expenses. The City will reimburse for a standard car of a mid-size class or less. The City will not reimburse for ancillary expenses charged to the car rental (e.g. GPS unit).

I. **Miscellaneous Travel** (e.g. parking, rental car gas, taxi, shuttle, toll fees, ferry fees, etc.): Miscellaneous travel expenses will be reimbursed at the actual cost incurred. Receipts are required for each expense of $10.00 or more.

J. **Miscellaneous other business expenses** (e.g. printing, photo development, binding): Other miscellaneous business expenses will be reimbursed at the actual cost incurred and may not include a mark up. Receipts are required for all miscellaneous expenses that are billed.

K. **Subconsultant**: Subconsultant expenses will be reimbursed at the actual cost incurred and a four percent (4%) markup. Copies of all Subconsultant invoices that are rebilled to the City are required.

7. TAXES, FEES AND LICENSES.

A. Consultant shall pay and maintain in current status, all necessary licenses, fees, assessments, permit charges, etc. necessary to conduct the work included under this Agreement. It is the Consultant's sole responsibility to monitor and determine changes or the enactment of any subsequent requirements for said fees, assessments, or changes and to immediately comply.

B. Where required by state statute, ordinance or regulation, Consultant shall pay and maintain in current status all taxes necessary for performance. Consultant shall not charge the City for federal excise taxes. The City will furnish Consultant an exemption certificate where appropriate.

C. The Director of Finance and Administrative Services may withhold payment pending satisfactory resolution of unpaid taxes and fees due the City.

D. The cost of any permits, licenses, fees, etc. arising as a result of the projects included in this Agreement shall be included in the project budgets.

8. CITY OF SPOKANE BUSINESS LICENSE.

Section 8.01.070 of the Spokane Municipal Code states that no person may engage in business with the City without first having obtained a valid annual business registration. The Consultant shall be responsible for contacting the State of Washington Business License Services at www.dor.wa.gov or 360-705-6741 to obtain a business registration. If the Consultant does not believe it is required to obtain a business registration, it may contact the City's Taxes and Licenses Division at (509) 625-6070 to request an exemption status determination.

9. SOCIAL EQUITY REQUIREMENTS.

No individual shall be excluded from participation in, denied the benefit of, subjected to discrimination under, or denied employment in the administration of or in connection with this Agreement because of age, sex, race, color, religion, creed, marital status, familial status, sexual orientation including gender expression or gender identity, national origin, honorably discharged

veteran or military status, the presence of any sensory, mental or physical disability, or use of a service animal by a person with disabilities. Consultant agrees to comply with, and to require that all subcontractors comply with, Section 504 of the Rehabilitation Act of 1973 and the Americans with Disabilities Act, as applicable to the Consultant. Consultant shall seek inclusion of woman and minority business for subcontracting. A woman or minority business is one that self-identifies to be at least 51% owned by a woman and/or minority. Such firms do not have to be certified by the State of Washington.

10. INDEMNIFICATION.

The Consultant shall defend, indemnify, and hold the City and its officers and employees harmless from all claims, demands, or suits at law or equity asserted by third parties for bodily injury (including death) and/or property damage which arise from the Consultant's negligence or willful misconduct under this Agreement, including attorneys' fees and litigation costs; provided that nothing herein shall require a Consultant to indemnify the City against and hold harmless the City from claims, demands or suits based solely upon the negligence of the City, its agents, officers, and employees. If a claim or suit is caused by or results from the concurrent negligence of the Consultant's agents or employees and the City, its agents, officers and employees, this indemnity provision shall be valid and enforceable to the extent of the negligence of the Consultant, its agents or employees. The Consultant specifically assumes liability and agrees to defend, indemnify, and hold the City harmless for actions brought by the Consultant's own employees against the City and, solely for the purpose of this indemnification and defense, the Consultant specifically waives any immunity under the Washington State industrial insurance law, or Title 51 RCW. The Consultant recognizes that this waiver was specifically entered into pursuant to the provisions of RCW 4.24.115 and was the subject of mutual negotiation. The indemnity and agreement to defend and hold the City harmless provided for in this section shall survive any termination or expiration of this agreement.

11. INSURANCE. During the period of the Agreement, the Consultant shall maintain in force at its own expense, each insurance noted below with companies or through sources approved by the State Insurance Commissioner pursuant to Title 48 RCW:

A. **Worker's Compensation Insurance** in compliance with RCW 51, which requires subject employers to provide Worker's Compensation coverage for all their subject workers and **Employers Liability Insurance (Stop Gap)** in the amount of $1,000,000.

B. **General Liability Insurance** on an occurrence basis, of not less than $1,000,000 each occurrence/$2,000,000 aggregate for bodily injury and property damage. It shall include contractual liability coverage for the indemnity provided under this Agreement. It shall provide that the City, its officers and employees are additional insureds but only with respect to the Consultant's services to be provided under this Agreement.

   i. Acceptable **supplementary Umbrella Insurance** coverage combined with Consultant's General Liability Insurance policy must be a minimum of $1,000,000, in order to meet the insurance coverage limits required in this Agreement; and

C. **Automobile Liability Insurance** with a combined single limit, or the equivalent of not less than $1,000,000 each accident for bodily injury and property damage, including coverage for owned, hired and non-owned vehicles.

D. **Professional Liability Insurance** with a combined single limit of not less than $1,000,000 each claim, incident or occurrence. This is to cover damages caused by the error, omission, or negligent acts related to the professional services to be provided under this Agreement. The coverage must remain in effect for at least two (2) years after the Agreement is completed.

There shall be no cancellation, material change, reduction of limits or intent not to renew the insurance coverage(s) without thirty (30) days written notice from the Consultant or its insurer(s) to the City.

Except with regard to Professional Liability (when required) and Worker's Compensation Insurance, each of the policies shall endorse the City of Spokane as an "Additional Insured" specifically for Consultant's services under this Agreement, as well as all of the parties who are additional insureds, and include applicable policy endorsements, the thirty (30) day cancellation clause, and the deduction or retention level. The Consultant shall be financially responsible for all pertinent deductibles, self-insured retentions, and/or self-insurance. As evidence of the insurance coverage(s) required by this Agreement, the Consultant shall furnish acceptable Certificates of Insurance (COI) upon request by the City.

12. DEBARMENT AND SUSPENSION.

The Consultant has provided its certification that it is in compliance with and shall not contract with individuals or organizations which are debarred, suspended, or otherwise excluded from or ineligible from participation in Federal Assistance Programs under Executive Order 12549 and "Debarment and Suspension", codified at 29 CFR part 98.

13. AUDIT.

Upon request, the Consultant shall permit the City and any other governmental agency ("Agency") involved in the funding of the Work to inspect and audit all pertinent books and records. This includes work of the Consultant, any subconsultant, or any other person or entity that performed connected or related Work. Such books and records shall be made available upon reasonable notice of a request by the City, including up to three (3) years after final payment or release of withheld amounts. Such inspection and audit shall occur in Spokane County, Washington, or other reasonable locations mutually agreed to by the parties. The Consultant shall permit the City to copy such books and records at its own expense. The Consultant shall ensure that inspection, audit and copying rights of the City is a condition of any subcontract, agreement or other arrangement under which any other persons or entity may perform Work under this Agreement.

14. INDEPENDENT CONSULTANT.

A. The Consultant is an independent Consultant. This Agreement does not intend the Consultant to act as a City employee. The City has neither direct nor immediate control over the Consultant nor the right to control the manner or means by which the Consultant works. Neither the Consultant nor any Consultant employee shall be an employee of the City. This Agreement prohibits the Consultant to act as an agent or legal representative of the City. The Consultant is not granted express or implied rights or authority to assume or create any obligation or responsibility for or in the name of the City, or to bind the City. The City is not liable for or obligated to pay sick leave, vacation pay, or any other benefit

of employment, nor to pay social security or other tax that may arise from employment. The Consultant shall pay all income and other taxes as due. The Consultant may perform work for other parties; the City is not the exclusive user of the services that the Consultant provides.

B. If the City needs the Consultant to Work on City premises and/or with City equipment, the City may provide the necessary premises and equipment. Such premises and equipment are exclusively for the Work and not to be used for any other purpose.

C. If the Consultant works on the City premises using City equipment, the Consultant remains an independent Consultant and not a City employee. The Consultant will notify the City Project Manager if s/he or any other Workers are within ninety (90) days of a consecutive 36-month placement on City property. If the City determines using City premises or equipment is unnecessary to complete the Work, the Consultant will be required to work from its own office space or in the field. The City may negotiate a reduction in Consultant fees or charge a rental fee based on the actual costs to the City, for City premises or equipment.

15. KEY PERSONS.

The Consultant shall not transfer or reassign any individual designated in this Agreement as essential to the Work, nor shall those key persons, or employees of Consultant identified as to be involved in the Project Work be replaced, removed or withdrawn from the Work without the express written consent of the City, which shall not be unreasonably withheld. If any such individual leaves the Consultant's employment, the Consultant shall present to the City one or more individuals with greater or equal qualifications as a replacement, subject to the City's approval, which shall not be unreasonably withheld. The City's approval does not release the Consultant from its obligations under this Agreement.

16. ASSIGNMENT AND SUBCONTRACTING.

The Consultant shall not assign or subcontract its obligations under this Agreement without the City's written consent, which may be granted or withheld in the City's sole discretion. Any subcontract made by the Consultant shall incorporate by reference this Agreement, except as otherwise provided. The Consultant shall require that all subconsultants comply with the obligations and requirements of the subcontract. The City's consent to any assignment or subcontract does not release the consultant from liability or any obligation within this Agreement, whether before or after City consent, assignment or subcontract.

17. CITY ETHICS CODE.

A. Consultant shall promptly notify the City in writing of any person expected to be a Consultant Worker (including any Consultant employee, subconsultant, principal, or owner) and was a former City officer or employee within the past twelve (12) months.

B. Consultant shall ensure compliance with the City Ethics Code by any Consultant Worker when the Work or matter related to the Work is performed by a Consultant Worker who has been a City officer or employee within the past two (2) years.

C. Consultant shall not directly or indirectly offer anything of value (such as retainers, loans, entertainment, favors, gifts, tickets, trips, favors, bonuses, donations, special discounts, work or meals) to any City employee, volunteer or official that is intended, or may appear to a reasonable person to be intended, to obtain or give special consideration to the Consultant. Promotional items worth less than $25 may be distributed by the Consultant to a City employee if the Consultant uses the items as routine and standard promotional materials. Any violation of this provision

may cause termination of this Agreement. Nothing in this Agreement prohibits donations to campaigns for election to City office, so long as the donation is disclosed as required by the election campaign disclosure laws of the City and of the State.

18. NO CONFLICT OF INTEREST.

Consultant confirms that the Consultant or workers have no business interest or a close family relationship with any City officer or employee who was or will be involved in the consultant selection, negotiation, drafting, signing, administration or evaluation of the Consultant's work. As used in this Section, the term Consultant includes any worker of the Consultant who was, is, or will be, involved in negotiation, drafting, signing, administration or performance of the Agreement. The term "close family relationship" refers to: spouse or domestic partner, any dependent parent, parent-in-law, child, son-in-law, daughter-in-law; or any parent, parent in-law, sibling, uncle, aunt, cousin, niece or nephew residing in the household of a City officer or employee described above.

19. ERRORS AND OMISSIONS, CORRECTIONS.

Consultant is responsible for professional quality, technical accuracy, and the coordination of all designs, drawings, specifications, and other services furnished by or on the behalf of the Consultant under this Agreement in the delivery of a final work product. The standard of care applicable to Consultant's services will be the degree of skill and diligence normally employed by professional engineers or Consultants performing the same or similar services at the time said services are performed. The Final Work Product is defined as a stamped, signed work product. Consultant, without additional compensation, shall correct or revise errors or mistakes in designs, drawings, specifications, and/or other consultant services immediately upon notification by the City. The obligation provided for in this Section regarding acts or omissions resulting from this Agreement survives Agreement termination or expiration.

20. INTELLECTUAL PROPERTY RIGHTS.

A. Copyrights. The Consultant shall retain the copyright (including the right of reuse) to all materials and documents prepared by the Consultant for the Work, whether or not the Work is completed. The Consultant grants to the City a non-exclusive, irrevocable, unlimited, royalty-free license to use copy and distribute every document and all the materials prepared by the Consultant for the City under this Agreement. If requested by the City, a copy of all drawings, prints, plans, field notes, reports, documents, files, input materials, output materials, the media upon which they are located (including cards, tapes, discs, and other storage facilities), software program or packages (including source code or codes, object codes, upgrades, revisions, modifications, and any related materials) and/or any other related documents or materials developed solely for and paid for by the City to perform the Work, shall be promptly delivered to the City.

B. Patents: The Consultant assigns to the City all rights in any invention, improvement, or discovery, with all related information, including but not limited to designs, specifications, data, patent rights and findings developed with the performance of the Agreement or any subcontract. Notwithstanding the above, the Consultant does not convey to the City, nor does the City obtain, any right to any document or material utilized by the Consultant created or produced separate from the Agreement or was pre-existing material (not already owned by the City), provided that the Consultant has identified in writing such material as pre-existing prior to commencement of the Work. If pre-existing materials are incorporated in the work, the Consultant grants the City an irrevocable, non-exclusive right and/or

license to use, execute, reproduce, display and transfer the pre-existing material, but only as an inseparable part of the work.

C. The City may make and retain copies of such documents for its information and reference with their use on the project. The Consultant does not represent or warrant that such documents are suitable for reuse by the City or others, on extensions of the project or on any other project, and the City releases the Consultant from liability for any unauthorized reuse of such documents.

21. CONFIDENTIALITY.

Notwithstanding anything to the contrary, City will maintain the confidentiality of Consultant's materials and information only to the extent that is legally allowed in the State of Washington. City is bound by the State Public Records Act, RCW Ch. 42.56. That law presumptively makes all records in the possession of the City public records which are freely available upon request by anyone. In the event that City gets a valid public records request for Consultant's materials or information and the City determines there are exemptions only the Consultant can assert, City will endeavor to give Consultant notice. Consultant will be required to go to Court to get an injunction preventing the release of the requested records. In the event that Consultant does not get a timely injunction preventing the release of the records, the City will comply with the Public Records Act and release the records.

22. DISPUTES.

Any dispute or misunderstanding that may arise under this Agreement, concerning the Consultant's performance, shall first be through negotiations, if possible, between the Consultant's Project Manager and the City's Project Manager. It shall be referred to the Director and the Consultant's senior executive(s). If such officials do not agree upon a decision within a reasonable period of time, either party may decline or discontinue such discussions and may then pursue the legal means to resolve such disputes, including but not limited to mediation, arbitration and/or alternative dispute resolution processes. Nothing in this dispute process shall mitigate the rights of the City to terminate the Agreement. Notwithstanding all of the above, if the City believes in good faith that some portion of the Work has not been completed satisfactorily, the City may require the Consultant to correct such work prior to the City payment. The City will provide to the Consultant an explanation of the concern and the remedy that the City expects. The City may withhold from any payment otherwise due, an amount that the City in good faith finds to be under dispute, or if the Consultant provides no sufficient remedy, the City may retain the amount equal to the cost to the City for otherwise correcting or remedying the work not properly completed. Waiver of any of these rights is not deemed a future waiver of any such right or remedy available at law, contract or equity.

23. TERMINATION.

A. For Cause: The City or Consultant may terminate the Agreement if the other party is in material breach of this Agreement, and such breach has not been corrected to the other party's reasonable satisfaction in a timely manner. Notice of termination under this Section shall be given by the party terminating this Agreement to the other, not fewer than thirty (30) business days prior to the effective date of termination.

B. For Reasons Beyond Control of Parties: Either party may terminate this Agreement without recourse by the other where performance is rendered impossible or impracticable for reasons beyond such party's reasonable control, such as, but not limited to, an act of nature, war or warlike operation, civil commotion, riot, labor dispute including strike, walkout or lockout, except labor disputes involving the Consultant's own employees, sabotage, or superior

governmental regulation or control. Notice of termination under this Section shall be given by the party terminating this Agreement to the other, not fewer than thirty (30) business days prior to the effective date of termination.

C. For Convenience: Either party may terminate this Agreement without cause, upon thirty (30) days written notice to the other party.

D. Actions upon Termination: if termination occurs not the fault of the Consultant, the Consultant shall be paid for the services properly performed prior to the actual termination date, with any reimbursable expenses then due, but such compensation shall not exceed the maximum compensation to be paid under the Agreement. The Consultant agrees this payment shall fully and adequately compensate the Consultant and all subconsultants for all profits, costs, expenses, losses, liabilities, damages, taxes and charges of any kind (whether foreseen or unforeseen) attributable to the termination of this Agreement.

E. Upon termination, the Consultant shall provide the City with the most current design documents, contract documents, writings and other products the Consultant has produced to termination, along with copies of all project-related correspondence and similar items. The City shall have the same rights to use these materials as if termination had not occurred; provided however, that the City shall indemnify and hold the Consultant harmless from any claims, losses, or damages to the extent caused by modifications made by the City to the Consultant's work product.

24. EXPANSION FOR NEW WORK.

This Agreement scope may be expanded for new work. Any expansion for New Work (work not specified within the original Scope of Work Section of this Agreement, and/or not specified in the original RFP as intended work for the Agreement) must comply with all the following limitations and requirements: (a) the New Work is not reasonable to solicit separately; (b) the New Work is for reasonable purpose; (c) the New Work was not reasonably known either the City or Consultant at time of contract or else was mentioned as a possibility in the solicitation (such as future phases of work, or a change in law); (d) the New Work is not significant enough to be reasonably regarded as an independent body of work; (e) the New Work would not have attracted a different field of competition; and (f) the change does not vary the essential identified or main purposes of the Agreement. The City may make exceptions for immaterial changes, emergency or sole source conditions, or other situations required in City opinion. Certain changes are not New Work subject to these limitations, such as additional phases of Work anticipated at the time of solicitation, time extensions, Work Orders issued on an On-Call contract, and similar. New Work must be mutually agreed and issued by the City through written Addenda. New Work performed before an authorizing Amendment may not be eligible for payment.

25. MISCELLANEOUS PROVISIONS.

A. Amendments: No modification of this Agreement shall be effective unless in writing and signed by an authorized representative of each of the parties hereto.

B. Binding Agreement: This Agreement shall not be binding until signed by both parties. The provisions, covenants and conditions in this Agreement shall bind the parties, their legal heirs, representatives, successors and assigns.

C. Americans with Disabilities Act (ADA): Specific attention by the designer is required in association with the Americans with Disabilities Act (ADA) 42 U.S.C. 12101-12213 and 47 U.S.C. 225 and 611, its requirements, regulations, standards and guidelines, which were updated in 2010 and are effective and mandatory for all State and local government facilities and places of public accommodation for

construction projects including alteration of existing facilities, as of March 15, 2012. The City advises that the requirements for accessibility under the ADA, may contain provisions that differ substantively from accessibility provisions in applicable State and City codes, and if the provisions of the ADA impose a greater or equal protection for the rights of individuals with disabilities or individuals associated with them than the adopted local codes, the ADA prevail unless approval for an exception is obtained by a formal documented process. Where local codes provide exceptions from accessibility requirements that differ from the ADA Standards; such exceptions may not be permitted for publicly owned facilities subject to Title II requirements unless the same exception exists in the Title II regulations. It is the responsibility of the designer to determine the code provisions.

D. The Consultant, at no expense to the City, shall comply with all laws of the United States and Washington, the Charter and ordinances of the City of Spokane; and rules, regulations, orders and directives of their administrative agencies and officers. Without limiting the generality of this paragraph, the Consultant shall comply with the requirements of this Section.

E. This Agreement shall be construed and interpreted under the laws of Washington. The venue of any action brought shall be in the Superior Court of Spokane County.

F. Remedies Cumulative: Rights under this Agreement are cumulative and nonexclusive of any other remedy of law or in equity.

G. Captions: The titles of sections or subsections are for convenience only and do not define or limit the contents.

H. Severability: If any term or provision is determined by a court of competent jurisdiction to be invalid or unenforceable, the remainder of this Agreement shall not be affected, and each term and provision shall be valid and enforceable to the fullest extent permitted by law.

I. Waiver: No covenant, term or condition or the breach shall be deemed waived, except by written consent of the party against whom the waiver is claimed, and any waiver of the breach of any covenant, term or condition shall not be deemed a waiver of any preceding or succeeding breach of the same or any other covenant, term of condition. Neither the acceptance by the City of any performance by the Consultant after the time the same shall have become due nor payment to the Consultant for any portion of the Work shall constitute a waiver by the City of the breach or default of any covenant, term or condition unless otherwise expressly agreed to by the City in writing.

J. Additional Provisions: This Agreement may be modified by additional terms and conditions (“Special Conditions”) which shall be attached to this Agreement as an Exhibit. The parties agree that the Special Conditions shall supplement the terms and conditions of the Agreement, and in the event of ambiguity or conflict with the terms and conditions of the Agreement, these Special Conditions shall govern.

K. Entire Agreement: This document along with any exhibits and all attachments, and subsequently issued addenda, comprises the entire agreement between the City and the Consultant. If conflict occurs between contract documents and applicable laws, codes, ordinances or regulations, the most stringent or legally binding requirement shall govern and be considered a part of this contract to afford the City the maximum benefits.

L. Negotiated Agreement: The parties acknowledge this is a negotiated agreement, that they have had this Agreement reviewed by their respective legal counsel, and that the terms and conditions of this Agreement are not to be construed against any party on the basis of such party’s draftsmanship.

M. No personal liability: No officer, agent or authorized employee of the City shall be personally responsible for any liability arising under this Agreement, whether expressed or implied, nor for any statement or representation made or in any connection with this Agreement.

IN WITNESS WHEREOF, in consideration of the terms, conditions and covenants contained, or attached and incorporated and made a part, the parties have executed this Agreement by having legally-binding representatives affix their signatures below.

CDM SMITH, INC.	**CITY OF SPOKANE**
By_____	By_____
Signature Date	Signature Date
_____	_____
Type or Print Name	Type or Print Name
_____	_____
Title	Title
Attest:	Approved as to form:
_____	_____
City Clerk	Assistant City Attorney

Attachments:
Exhibit A – Certificate Regarding Debarment
Exhibit B – Scope of Services
Exhibit C – Department of Ecology Water Quality Columbia Basin Restoration Agreement No. WQCRBR-2527-Spokan-00011

26-319

EXHIBIT A

CERTIFICATION REGARDING DEBARMENT, SUSPENSION, INELIGIBILITY AND VOLUNTARY EXCLUSION

1. The undersigned (i.e., signatory for the Subrecipient / Contractor / Consultant) certifies, to the best of its knowledge and belief, that it and its principals:

   a. Are not presently debarred, suspended, proposed for debarment, declared ineligible, or voluntarily excluded from covered transactions by any federal department or agency;
   b. Have not within a three-year period preceding this contract been convicted or had a civil judgment rendered against them for commission of fraud or a criminal offense in connection with obtaining, attempting to obtain, or performing a public (federal, state, or local) transaction or contract under a public transaction; violation of federal or state antitrust statutes or commission of embezzlement, theft, forgery, bribery, falsification or destruction of records, making false statements, tax evasion, receiving stolen property, making false claims, or obstruction of justice;
   c. Are not presently indicted or otherwise criminally or civilly charged by a government entity (federal, state, or local) with commission of any of the offenses enumerated in paragraph (1)(b) of this certification; and,
   d. Have not within a three-year period preceding this contract had one or more public transactions (federal, state, or local) terminated for cause or default.

2. The undersigned agrees by signing this contract that it shall not knowingly enter into any lower tier covered transaction with a person who is debarred, suspended, declared ineligible, or voluntarily excluded from participation in this covered transaction.

3. The undersigned further agrees by signing this contract that it will include the following clause, without modification, in all lower tier covered transactions and in all solicitations for lower tier covered transactions:

   Certification Regarding Debarment, Suspension, Ineligibility and Voluntary Exclusion – Lower Tier Covered Transactions

   1. The lower tier contractor certified, by signing this contract that neither it nor its principals is presently debarred, suspended, proposed for debarment, declared ineligible, or voluntarily excluded from participation in this transaction by any federal department or agency.

   2. Where the lower tier contractor is unable to certify to any of the statements in this contract, such contractor shall attach an explanation to this contract.

4. I understand that a false statement of this certification may be grounds for termination of the contract.

Name of Subrecipient / Contractor / Consultant (Type or Print)	Program Title (Type or Print)
Name of Certifying Official (Type or Print) Title of Certifying Official (Type or Print)	Signature Date (Type or Print)

EXHIBIT B

EXHIBIT C

Baseline PFAS Fate and Transport Study Scope of Work

The City of Spokane (City) seeks to better understand per- and polyfluoroalkyl substances (PFAS) within its wastewater collection system, treatment processes, biosolids program, and related environmental pathways through a Baseline PFAS Fate and Transport Study (Study) that establishes a defensible foundation for identifying potential PFAS sources and evaluating PFAS movement through the wastewater system, assess future regulatory implications, and inform practical mitigation and management strategies.

The City is proactively advancing its understanding and management of PFAS within its wastewater and biosolids systems to address and alleviate public concerns and support regulatory readiness, risk management, and long-term operational planning. This project provides a structured framework for a phased approach to identify and mitigate PFAS impacts to Riverside Park Water Reclamation Facility (RPWRF) and improve long-term biosolids land application viability.

This Scope of Work defines the work to be performed by CDM Smith Inc. (CDM Smith) for the City.

Task 1 - Existing Data Review and PFAS Strategic Roadmap Development

This task will initiate the project with a kick-off meeting and establish an understanding of existing data. Once needed data is collected, this task will then establish a PFAS Roadmap, or a stepwise approach for investigating PFAS within and upstream of the RPWRF.

1.1 Project Kick-off Meeting and Data Collection:

CDM Smith will conduct a virtual kickoff meeting with the City to confirm project objectives, available data, communication protocols, review procedures, and schedule assumptions. CDM Smith will:

- Prepare and distribute a kickoff agenda in advance of the meeting.
- Facilitate a one-hour virtual kickoff meeting with the technical team and City representatives to establish the City's goals with regard to PFAS investigations in wastewater.
- Prepare meeting notes documenting decisions, action items, and responsible parties.
- Prepare a consolidated information request identifying the files and data needed for the desktop assessment. Data to be collected may include:
  - NPDES and related permits
  - Available PFAS data in excel or CSV format for RPWRF (influent, effluent, biosolids) and/or upstream collection system sampling
  - Process flow diagrams of RPWRF
  - Average influent and effluent flows, septage records, biosolids generation and records, and other plant operation data.
  - Available upstream collection system mapping, including GIS files, as well as any available collection system flow data (e.g. pump station records)
  - Known commercial and industrial dischargers
  - Industrial Pre-Treatment Program details and list of Industrial users (If applicable)
  - A list of the City's commercial businesses, industrial users (IUs), significant industry users (SIUs), categorical industrial users (CIUs), and industrial pre-treatment program details (if applicable).

Assumptions:

- City will provide available data within two weeks of receiving data requests.
- City will provide RPWRF flow, process, and residuals (sludge) data in Excel format.
- City will provide collection system layout in ArcGIS format.
- Additional check-in meetings between the client and CDM Smith outside of the kick-off are not budgeted.

1.2 Prepare a PFAS Roadmap:

CDM Smith will use the data gathered to prepare a Roadmap outlining actionable steps for the City to take toward characterizing the existence of PFAS in the collection system and at the RPWRF. Use of the roadmap will provide a means of visualizing the decision-making process by mapping out different courses of action as well as potential outcomes. Considerations will be given to regulatory implications, technical feasibility of sampling and assessment, and recommendations/follow-up actions that might be appropriate depending on outcomes from the assessment.

The activities under this task are:

- Review data collected in Task 1.1.
- Prepare a PFAS Roadmap outlining actionable steps that may include:
  - Identify and benchmark PFAS level at the RPWRF influent, effluent, and biosolids using available data.
  - Identify potential upstream high-impact areas to inform selection of initial upstream sampling locations.
  - Develop a sampling plan strategy to supplement existing PFAS data and identify potential point and non-point sources of PFAS within the RPWRF and upstream collection system.
  - Identify potential approach to public engagement and education.
  - Identify potential approach to future source control and mitigation opportunities.
  - Identify potential process optimization opportunities for PFAS separation.
- Prepare a draft memo and Roadmap documenting the City's priorities and decisions made will be issued to the City for comments.
- Provide a two-hour virtual workshop to review the draft Roadmap and associated sewershed sampling recommendations with the City before issuing the final draft Roadmap memo.

Assumptions:

- City to provide data requested in Task 1.1 within two weeks of the project kick-off meeting.
- City to provide a consolidated list of comments to the draft Roadmap within 2 weeks following the workshop. Diverging comments from City reviewers to be resolved by City prior to providing to CDM Smith to address.
- The revised, final technical memorandum and associated roadmap will be provided three weeks after receipt of comments.
- Additional meetings between the client and CDM Smith outside of the workshop are not included herein.

Deliverables:

- A draft and final technical memo documenting the Roadmap by addressing compiled and consolidated comments from the City.
- A PDF of the workshop meeting slides.

Task 2 - Review of City's Quality Assurance Project Plan

This task will involve CDM Smith's review of the City's quality assurance project plan (QAPP). CDM Smith will provide comments for the potential improvement of the QAPP based on experience with similar projects. The activities under this task are:

- CDM Smith will review and provide documented feedback on the City's QAPP.
- A virtual meeting will be scheduled by CDM Smith to discuss review comments with City staff.
- CDM Smith will recommend current best practices for sample collection, sample handling, and data interpretation (e.g., duplicates, non-detects, matrix interference and lab flags).

Assumptions:

- City will provide a Word file of their QAPP. Consolidated comments to be provided by CDM Smith.
- CDM Smith is not responsible for content related to health and safety procedures.
- Only one round of review by CDM Smith will be conducted. This may include an initial review of QAPP sections not including sampling locations, followed by a subsequent review of only the sampling locations section.
- One two-hour virtual meeting to discuss review comments by CDM Smith with City staff.
- City to provide a draft QAPP to CDM Smith within three weeks following the Task 1.1 project kick-off meeting.
- Sampling locations included in the QAPP will ultimately be informed by the Roadmap memo and associated workshop discussions completed during Task 1.2. Therefore, Task 1.2 must be completed prior to the selection of sampling locations and CDM Smith's review of sampling locations included in the QAPP.
- The QAPP will specify procedures for sample collection and handling and data analysis, such as how duplicates, non-detects, and other lab flags will be interpreted for Task 3.
- Additional check-in meetings between the client and CDM Smith outside of the workshop are not budgeted.

Deliverables:

- Word file with consolidated CDM Smith comments on QAPP.

Task 3 – Evaluate PFAS Levels in Spokane's Collection System and RPWRF

CDM Smith will review existing influent, effluent, and biosolids PFAS data with additional data collected as part of the Task 2 Sampling Plan.

The activities to be completed under this task are:

- Review PFAS data and present data organized into groups as follows:
  - >C6 PFCAs
  - <C6 PFSAs
  - C4-C6 PFCAs
  - C4-C6 PFCAs
  - Precursor (if tested)
- Benchmark PFAS levels influent, effluent, and biosolids to other similar municipalities and potential regulatory limits.
- Identify potential transformation of PFAS precursors through plant treatment process and compare to other available benchmarks and to States and Federal regulations.

- Identify signature PFAS compound present in samples that may be typical to certain commercial and industrial discharge.
- Comment on and provide technical insight to anomalies and variability of sampling results.
- Provide recommended next steps for further PFAS investigation as needed based on findings.
- Prepare a draft memorandum summarizing data review and associated findings.
- Hold one virtual meeting with the City to discuss results of the task. CDM Smith will present the results in a PowerPoint presentation.

Assumptions:

- Sampling will be conducted based on a schedule developed and agreed upon by the City.
- Sampling is assumed to occur for a single event and therefore does not include an assessment of temporal variability.
- Data provided from sampling will be quantitative; qualitative methods will not be used as part of this study.
- Summary and conclusions will be based upon target PFAS compound data analyzed via EPA Method 1633A. Other methods may be used to help understand the general fate and transport of PFAS and organic fluorine, but it is not anticipated that a closed fluorine balance will be achieved as part of this scope of work.
- CDM Smith will be provided with CSV and excel files from the City's selected commercial lab.
- This scope does not include formal analytical laboratory data validation. Data validation is an additional scope and effort if required.
- One (1) 2-hr workshop will be held to discuss results of the task with City staff.
- City will provide a consolidated list of comments to the draft data analysis memorandum within 1 week of receipt of draft memo. Diverging comments from City reviewers to be resolved by City prior to returning to CDM Smith to address.
- Additional check-in meetings between the client and CDM Smith outside of the workshop are not budgeted.

Deliverables:

- Findings will be summarized in draft and final technical memorandums to support informed decision making and long term PFAS risk management for the City.
- A PDF of the meeting slides summarizing results from sampling and analysis.

Task 4 – Project Management

The Project Manager will lead the day-to-day scheduling and budget tracking of the project and its various components to ensure that client objectives are met.

Key items to be implemented under this task include:

- Set-up and establishment of new project on CDM Smith's system.
- Day-do-day management to administer, coordinate, and manage the work.
- Management of the technical and editorial review process to meet CDM Smith's Quality Management Program.
- Ensure assignment of appropriate technical experts to each task, both for execution and review.
- Prepare monthly invoices and narrative status reports.
- Perform project scheduling to meet deadlines.

- Identify potential change orders and inform the City, along with associated scope, budget, and cost. Change orders shall not be implemented until written authorization is received from the City.

Schedule

Deliverable schedule is as follows:

- Task 1 to be completed within approximately two months of project start, and three weeks of receipt of draft memo comments.
- Task 2 to be completed within approximately two months of receipt of City's QAPP.
- Task 3:
  - Draft data analysis memo to be submitted within two months of receipt of PFAS analytical data.
  - Final data analysis memo to be submitted approximately two weeks after receipt of City's consolidated comments.

A preliminary schedule showing our assumed duration of seven (7) months is provided below, based on the current scope assumptions and timely receipt of project data, sampling plans, analytical results, and City review and/or comments. Potential technical or logistical challenges identified during project execution, such as delays in project funding, procurement of the analytical laboratory, data availability, sampling implementation, laboratory turnaround times, or evolving regulatory considerations may require adjustments to the schedule and budget.

ID	Task Number	Task Name	Duration (working days)	Start	Finish
1	**1.0**	**Existing Data Review and PFAS Strategic Roadmap**	**45 days**	**Tue 12/1/26**	**Mon 2/1/27**
2	1.1	Project Kick-Off Meeting and Data Collection	14 days	Tue 12/1/26	Fri 12/18/26
3	1.2	Prepare a PFAS Roadmap	31 days	Mon 12/21/26	Mon 2/1/27
4	**2.0**	**Review of City's Quality Assurance Project Plan**	**41 days**	**Mon 12/21/26**	**Mon 2/15/27**
5	**3.0**	**Evaluate PFAS Levels in Spokane's Collection System and RPWRF**	**93 days**	**Mon 2/22/27**	**Wed 6/30/27**
6	3.0	PFAS Sampling	11 days	Mon 2/22/27	Mon 3/8/27
7	3.0	PFAS Analysis	41 days	Mon 3/8/27	Mon 5/3/27
8	3.0	Draft Data Analysis Results	26 days	Mon 5/3/27	Mon 6/7/27
9	3.0	Client Review	6 days	Mon 6/7/27	Mon 6/14/27
10	3.0	Final Data Analysis Results	13 days	Mon 6/14/27	Wed 6/30/27
11	**4.0**	**Project Management**	**152 days**	**Tue 12/1/26**	**Wed 6/30/27**



Budget

Deliverable budget is as follows:

Task	**Budget**
Task 1	$21,660
Task 2	$10,715
Task 3	$44,892
Task 4	$7,722
Total Budget	**$84,989**

CERTIFICATE OF LIABILITY INSURANCE

1/1/2027

DATE (MM/DD/YYYY): 8/28/2026

THIS CERTIFICATE IS ISSUED AS A MATTER OF INFORMATION ONLY AND CONFERS NO RIGHTS UPON THE CERTIFICATE HOLDER. THIS CERTIFICATE DOES NOT AFFIRMATIVELY OR NEGATIVELY AMEND, EXTEND OR ALTER THE COVERAGE AFFORDED BY THE POLICIES BELOW. THIS CERTIFICATE OF INSURANCE DOES NOT CONSTITUTE A CONTRACT BETWEEN THE ISSUING INSURER(S), AUTHORIZED REPRESENTATIVE OR PRODUCER, AND THE CERTIFICATE HOLDER.

IMPORTANT: If the certificate holder is an ADDITIONAL INSURED, the policy(ies) must have ADDITIONAL INSURED provisions or be endorsed. If SUBROGATION IS WAIVED, subject to the terms and conditions of the policy, certain policies may require an endorsement. A statement on this certificate does not confer rights to the certificate holder in lieu of such endorsement(s).

PRODUCER Lockton Companies, LLC DBA Lockton Insurance Brokers, LLC in CA CA license #0F15767 444 W. 47th St., Ste. 900 Kansas City MO 64112-1906 (816) 960-9000 kcasu@lockton.com	**CONTACT NAME:** **PHONE (A/C, No, Ext):** **FAX (A/C, No):** **E-MAIL ADDRESS:**
INSURED 1581927 CDM SMITH INC. 75 STATE STREET, SUITE 701 BOSTON, MA 02109	**INSURER(S) AFFORDING COVERAGE** — **NAIC #** **INSURER A :** Hartford Fire Insurance Company — 19682 **INSURER B :** ACE Property and Casualty Insurance Company — 20699 **INSURER C :** Hartford Accident and Indemnity Company — 22357 **INSURER D :** Twin City Fire Insurance Company — 29459 **INSURER E :** Underwriters at Lloyd's London **INSURER F :**

COVERAGES **CERTIFICATE NUMBER:** 23977048 **REVISION NUMBER:** XXXXXXX

THIS IS TO CERTIFY THAT THE POLICIES OF INSURANCE LISTED BELOW HAVE BEEN ISSUED TO THE INSURED NAMED ABOVE FOR THE POLICY PERIOD INDICATED. NOTWITHSTANDING ANY REQUIREMENT, TERM OR CONDITION OF ANY CONTRACT OR OTHER DOCUMENT WITH RESPECT TO WHICH THIS CERTIFICATE MAY BE ISSUED OR MAY PERTAIN, THE INSURANCE AFFORDED BY THE POLICIES DESCRIBED HEREIN IS SUBJECT TO ALL THE TERMS, EXCLUSIONS AND CONDITIONS OF SUCH POLICIES. LIMITS SHOWN MAY HAVE BEEN REDUCED BY PAID CLAIMS.

INSR LTR	TYPE OF INSURANCE	ADDL INSD	SUBR WVD	POLICY NUMBER	POLICY EFF (MM/DD/YYYY)	POLICY EXP (MM/DD/YYYY)	LIMITS	
A	X **COMMERCIAL GENERAL LIABILITY** CLAIMS-MADE [X] OCCUR GEN'L AGGREGATE LIMIT APPLIES PER: [X] POLICY [X] PRO-JECT [X] LOC OTHER:	N	N	08CSEQU4161	1/1/2026	1/1/2027	EACH OCCURRENCE DAMAGE TO RENTED PREMISES (Ea occurrence) MED EXP (Any one person) PERSONAL & ADV INJURY GENERAL AGGREGATE PRODUCTS - COMP/OP AGG 	$ 2,000,000 $ 1,000,000 $ 15,000 $ 2,000,000 $ 4,000,000 $ 4,000,000 $
A	**AUTOMOBILE LIABILITY** X ANY AUTO OWNED AUTOS ONLY HIRED AUTOS ONLY SCHEDULED AUTOS NON-OWNED AUTOS ONLY	N	N	08 UEN QU4162	1/1/2026	1/1/2027	COMBINED SINGLE LIMIT (Ea accident) BODILY INJURY (Per person) BODILY INJURY (Per accident) PROPERTY DAMAGE (Per accident) 	$ 2,000,000 $ XXXXXXX $ XXXXXXX $ XXXXXXX $ XXXXXXX
B	X **UMBRELLA LIAB** [X] OCCUR **EXCESS LIAB** CLAIMS-MADE DED RETENTION $	N	N	XEUG28194687010	1/1/2026	1/1/2027	EACH OCCURRENCE AGGREGATE 	$ 10,000,000 $ 10,000,000 $ XXXXXXX
C D	**WORKERS COMPENSATION AND EMPLOYERS' LIABILITY** ANY PROPRIETOR/PARTNER/EXECUTIVE OFFICER/MEMBER EXCLUDED? (Mandatory in NH) Y/N [N] N/A If yes, describe under DESCRIPTION OF OPERATIONS below	N/A	N	08WNQU4160 (AOS) 08WBRQU4163 (WI)	1/1/2026 1/1/2026	1/1/2027 1/1/2027	X PER STATUTE OTH-ER E.L. EACH ACCIDENT E.L. DISEASE - EA EMPLOYEE E.L. DISEASE - POLICY LIMIT	 $ 1,000,000 $ 1,000,000 $ 1,000,000
E	ARCHITECTS & ENGINEERS PROFESSIONAL LIABILITY	N	N	PSDEF2600033	1/1/2026	1/1/2027	EACH CLAIM: $5,000,000 AGGREGATE: $5,000,000	

DESCRIPTION OF OPERATIONS / LOCATIONS / VEHICLES (ACORD 101, Additional Remarks Schedule, may be attached if more space is required)

RE: For Proposal Use Only.

CERTIFICATE HOLDER

23977048
CDM Smith Inc.
75 State Street, Suite 701
Boston 02109

CANCELLATION See Attachment

SHOULD ANY OF THE ABOVE DESCRIBED POLICIES BE CANCELLED BEFORE THE EXPIRATION DATE THEREOF, NOTICE WILL BE DELIVERED IN ACCORDANCE WITH THE POLICY PROVISIONS.

AUTHORIZED REPRESENTATIVE

Joseph M Agnello

© 1988-2015 ACORD CORPORATION. All rights reserved.

The ACORD name and logo are registered marks of ACORD

PROFESSIONAL LIABILITY

POLICY: PSDEF2600033

BEAZLEY (SYNDICATES 2623/0623) - 25%

BRIT (SYNDICATE 2987) - 25%

LLOYD'S SYNDICATES 4242, 457, 5555, 4711, 1686 - 11.333%

CONVEX INSURANCE UK LIMITED - 6.334%

ARCH INSURANCE (UK) LIMITED - 3.833%

LLOYDS SYNDICATES 5555, 4472, 1955, 4444, 1686, 5623, 510, 2232, 3000, 2001 - 28.5%

Washington State Department of Revenue

Business Lookup

License Information:

New search Back to results

Entity name:	CDM SMITH INC.
Business name:	AGI TECHNOLOGIES
Entity type:	Profit Corporation
UBI #:	601-104-148
Business ID:	001
Location ID:	0003
Location:	Active
Location address:	14432 SE EASTGATE WAY STE 100 BELLEVUE WA 98007-6493
Mailing address:	TAX DEPARTMENT 75 STATE ST STE 701 BOSTON MA 02109-1940
Excise tax and reseller permit status:	Click here
Secretary of State information:	Click here

Endorsements

Filter

Endorsements held at this location	License #	Count	Details	Status	Expiration date	First issuance dat
Bellingham General Business	036673			Active		Aug-11-2008
Blaine General Business - Non-Resident				Active	Jul-31-2027	Feb-14-2000
Bremerton General Business - Non-Resident	18160			Active	Jul-31-2027	Aug-17-1994
Federal Way General Business - Non-Resident	00-105209-00-BL			Active	Jul-31-2027	Oct-18-2000
Issaquah General Business - Non-Resident	BUS03-01363			Active	Jul-31-2027	Sep-09-2006
Lacey General Business - Non-Resident	8534			Active	Jul-31-2027	Feb-05-2002
Mercer Island General Business - Non-Resident	920104			Active	Jul-31-2027	Oct-09-2019
Port Orchard General Business - Non-Resident	B001789			Active	Jul-31-2027	May-04-2010
Spokane General Business - Non-Resident	T12108200BUS			Active	Jul-31-2027	Oct-15-2012
Tukwila General Business - Non-Resident				Active	Jul-31-2027	Mar-27-2019
Yelm General Business - Non-Resident	10021			Active	Jul-31-2027	Sep-19-2018

Owners and officers on file with the Department of Revenue

Filter

Owners and officers	Title
BANNER, JENNIFER S.	
BOUCHARD, ANTHONY B.	
CAMPBELL, CHRISTOPHER R.	
DESMARIS, THIERRY	
FORGAS, JULIA B.	
MAKOFSKY, JASON P.	
MARCACCIO, MARIO J.	
MILLIGAN, PAUL	
ROGERS, RANDY R.	
WALL, TIMOTHY B.	
WALTERS, GAE A.	
ZUTAVERN, ANGELA	

View Additional Locations

The Business Lookup information is updated nightly. Search date and time: 11/3/2026 9:53:46 AM

Contact us

How are we doing?
Take our survey!

Don't see what you expected?
Check if your browser is supported

Agreement No. WQCRBR-2527-Spokan-00011

WATER QUALITY COLUMBIA RIVER BASIN RESTORATION AGREEMENT

BETWEEN

THE STATE OF WASHINGTON DEPARTMENT OF ECOLOGY

AND

CITY OF SPOKANE

This is a binding Agreement entered into by and between the state of Washington, Department of Ecology, hereinafter referred to as "ECOLOGY," and City of Spokane, hereinafter referred to as the "RECIPIENT," to carry out with the provided funds activities described herein.

GENERAL INFORMATION

Project Title:	Baseline PFAS Fate and Transport Study in COS Wastewater System
Total Cost:	$214,000.00
Total Eligible Cost:	$214,000.00
Ecology Share:	$214,000.00
Recipient Share:	$0.00
The Effective Date of this Agreement is:	06/01/2026
The Expiration Date of this Agreement is no later than:	06/30/2027
Project Type:	Columbia River

Project Short Description:
This project will characterize the presence, transport, and fate of per- and polyfluoroalkyl substances (PFAS) within the City of Spokane's wastewater system to establish a baseline understanding of system-wide concentrations. Sampling will include domestic, commercial, and industrial sources within the collection system; influent, effluent, biosolids, and septage at the Riverside Park Water Reclamation Facility (RPWRF); and soils from past and future biosolids land application sites.

Project Long Description:
Per- and polyfluoroalkyl substances (PFAS) are a large group of synthetic compounds that have emerged as contaminants of increasing regulatory, scientific, and public health concern (CECs). Known for their persistence, resistance to degradation, and ability to bioaccumulate, PFAS are often referred to as "forever chemicals." Their mobility in water and soils, combined with potential links to adverse human health and ecological effects, underscores the urgency of developing strategies to monitor and manage their presence in the

environment.

Municipal wastewater systems play an important role in the PFAS cycle. Because of their widespread use in industrial processes, commercial products, and households, PFAS often enter wastewater collection systems through diverse sources. Wastewater treatment plants are therefore not only recipients of PFAS but also potential redistribution points, releasing them through effluent, concentrating them in biosolids, and introducing them into soils via land application practices. This interconnectedness means that understanding PFAS pathways within a city's wastewater infrastructure is critical for protecting downstream water quality - including that of the Spokane River -safeguarding agricultural soils, and supporting regulatory compliance.

This project seeks to establish a baseline understanding of PFAS within the City of Spokane's wastewater system. Through two quarterly monitoring events, we will begin to characterize PFAS concentrations and distribution in domestic, commercial, and industrial inputs to the collection system. In addition, we will evaluate influent, effluent, biosolids, and septage streams at the City's Riverside Park Water Reclamation Facility (RPWRF), as well as soils at historical and future biosolids land application sites. Together, this data will provide a clearer picture of the presence, transport, and fate of PFAS throughout Spokane's wastewater and biosolids management systems.

The results of this study will provide a critical foundation for decision-making. By identifying potential sources and quantifying PFAS loads at key points within the system, the City will be positioned to make informed choices around regulatory compliance, treatment and mitigation strategies, and long-term management of biosolids and land application programs. These actions will help reduce the risk of PFAS entering the Spokane River, contributing to improved water quality for people, fish, and wildlife. Moreover, this project will generate valuable data to support regional and national discussions on PFAS, contributing to a growing body of knowledge that will guide future policy, technology development, and public health protections.

Ultimately, this effort represents an important step toward proactive environmental stewardship. By advancing Spokane's understanding of PFAS within its wastewater system, the project will help ensure that the City is equipped to address emerging regulatory requirements, protect community health, and safeguard the lower Spokane River both now and in the future.

Overall Goal:
The goal of this project is to establish a comprehensive baseline understanding of PFAS occurrence, transport, and fate within the City of Spokane's wastewater system in order to inform regulatory compliance, guide mitigation strategies, and support the long-term protection of public health and environmental resources.

RECIPIENT INFORMATION

Organization Name: City of Spokane

Federal Tax ID: 91-6001280
UEI Number: PDNCLY8MYJN3

Mailing Address: 808 W Spokane Falls Blvd
Spokane, WA 99201

Physical Address: 808 W Spokane Falls Blvd
Spokane, Washington 99201

Organization Email: mpapich@spokanecity.org
Organization Fax: (509) 343-5760

Contacts

Project Manager	Lorena Croucher Associate Engineer 808 W Spokane Falls Blvd Spokane, Washington 99201 Email: lcroucher@spokanecity.org Phone: (509) 625-6310
Billing Contact	Kathleen Keck Senior Accountant 808 W Spokane Falls Blvd Spokane, Washington 99201 Email: kkeck@spokanecity.org Phone: (509) 625-6075
Authorized Signatory	Marlene C Feist Public Works Director 808 W Spokane Falls Blvd Spokane, Washington 99201 Email: mfeist@spokanecity.org Phone: (509) 625-6310

ECOLOGY INFORMATION

Mailing Address: Department of Ecology
Water Quality
PO BOX 47600
Olympia, WA 98504-7600

Physical Address: Water Quality
300 Desmond Drive SE
Lacey, WA 98503

Contacts

Project Manager	Cheyenne Brown 4601 N Monroe Street Spokane, Washington 99205-1295 Email: CHEY461@ecy.wa.gov Phone: (509) 999-0682
Financial Manager	Cheyenne Brown 4601 N Monroe Street Spokane, Washington 99205-1295 Email: CHEY461@ecy.wa.gov Phone: (509) 999-0682

AUTHORIZING SIGNATURES

RECIPIENT agrees to furnish the necessary personnel, equipment, materials, services, and otherwise do all things necessary for or incidental to the performance of work as set forth in this Agreement.

RECIPIENT acknowledges that they had the opportunity to review the entire Agreement, including all the terms and conditions of this Agreement, Scope of Work, attachments, and incorporated or referenced documents, as well as all applicable laws, statutes, rules, regulations, and guidelines mentioned in this Agreement. Furthermore, the RECIPIENT has read, understood, and accepts all requirements contained within this Agreement.

This Agreement contains the entire understanding between the parties, and there are no other understandings or representations other than as set forth, or incorporated by reference, herein.

No subsequent modifications or amendments to this agreement will be of any force or effect unless in writing, signed by authorized representatives of the RECIPIENT and ECOLOGY and made a part of this agreement. ECOLOGY and RECIPIENT may change their respective staff contacts without the concurrence of either party.

This Agreement shall be subject to the written approval of Ecology's authorized representative and shall not be binding until so approved.

The signatories to this Agreement represent that they have the authority to execute this Agreement and bind their respective organizations to this Agreement.

IN WITNESS WHEREOF: the parties hereto, having read this Agreement in its entirety, including all attachments, do agree in each and every particular and have thus set their hands hereunto.

Washington State
Department of Ecology

By: _____

Jon Kenning, PhD Date

Water Quality

Program Manager

Template Approved to Form by
Attorney General's Office

City of Spokane

By: _____

Marlene C Feist Date

Public Works Director

SCOPE OF WORK

Task Number: 1 **Task Cost:** $17,000.00

Task Title: Project Development

Task Description:

1.1 QUALITY ASSURANCE PROJECT PLAN (QAPP) DEVELOPMENT

Work related to data collection or analysis may not begin until the Quality Assurance Project Plan (QAPP) is approved by the Washington State Department of Ecology's Program Quality Coordinator (QC) or the QC provides written documentation that a QAPP is not required.

Project work should not begin until the Quality Assurance Project Plan (QAPP) has Quality Assurance approval. At contract start, the RECIPIENT must work with the QC to ensure the project meets quality assurance requirements per the contract terms and conditions.

The RECIPIENT is also required to conduct and document an annual review of the approved QAPP with ECOLOGY for projects exceeding one year in duration. For any changes prior to the annual review the RECIPIENT must contact the QC to confirm required documentation. Changes may include but are not limited to new sampling sites, extended timeline, updated methods, and changes to analysis.

1.2 CULTURAL RESOURCES REVIEW

The RECIPIENT will comply with Section 106 cultural resources review requirements that involve any project site disturbance.

To initiate cultural resources, review the RECIPIENT will:

1. Complete and submit an Ecology Cultural Resources Review Form, and or a cultural resources report completed by a licensed professional to ECOLOGY.
2. Complete and submit an Ecology Inadvertent Discovery Plan (IDP) to ECOLOGY. The RECIPIENT will ensure that all contractors and subcontractors have a copy of the completed IDP prior to and while working on-site.

The RECIPIENT will complete all cultural resource review requirements as described in this agreement and the Final Determination by ECOLOGY prior to any site disturbing work.

*Cultural Resources Review may take up to 45-60 days to complete.

Task Goal Statement:

The RECIPIENT will develop a plan for project implementation and monitoring (if required) to support the successful completion of the PROJECT.

Task Expected Outcome:

The RECIPIENT will produce and submit to ECOLOGY a QAPP (if required) prior to commencement of the PROJECT. RECIPIENT will complete project factsheets before the end of the project.

Recipient Task Coordinator: Jeff Donovan

Project Development

Deliverables

Number	Description	Due Date
1.1	Copy of signed QAPP or QAPP waiver documentation. Upload to EAGL and notify PM and FM.	09/11/2026
1.2	An ECOLOGY Cultural Resources Review Waiver or ECOLOGY Final Determination and IDP.	09/11/2026

SCOPE OF WORK

Task Number: 2 **Task Cost:** $0.00

Task Title: Project Administration and Reporting

Task Description:
Task 2 describes the project administrative and reporting requirements. The RECIPIENT will refer to and comply with all underlying state and federal terms and conditions.

2.1 PROGRESS REPORTS/PAYMENT REQUESTS (PRPR)
The RECIPIENT will complete quarterly payment request and progress reports (PRPR) in EAGL (Ecology Administration of Grants and Loans). The RECIPIENT will maintain project records, submit requests for reimbursement with corresponding backup documentation, and fully complete progress reports. Quarterly reporting periods are:
Quarter 1 reporting period: January 1 – March 31; due April 30
Quarter 2 reporting period: April 1 – June 30; due July 30
Quarter 3 reporting period: July 1 – September 30; due October 30
Quarter 4 reporting period: October 1 – December 31; due January 30

Progress reports shall include:
- A description of:
  - Work completed for each task/subtask during the reporting period, including what deliverables were completed and submitted during the reporting period.
  - Total allowable spending by task.
  - Status for ongoing project tasks.
  - Challenges affecting task-specific or overall project completion date(s), scope of work, or costs.
- Evidence of satisfactory completion of all reporting requirements.

The RECIPIENT will submit invoices at least quarterly, but no more frequently than monthly.

2.2 RECIPIENT CLOSE OUT REPORT (RCOR) IN EAGL
At the conclusion of the project, the RECIPIENT will complete the Recipient Close Out Report (RCOR) in EAGL. The RCOR Form will include project accomplishments, challenges, and all relevant project information.

2.3 EIM DATA REPORTING
The RECIPIENT collects any physical, chemical, or environmental data (e.g., dissolved oxygen, water temperature, salinity, turbidity, pH, phosphorous, total nitrogen, E. coli or enterococci, and other biological and habitat data), then the RECIPIENT's QAPP will specify data to be reported.

The RECIPIENT will submit all environmental data to ECOLOGY's Environmental Informational Management System (EIM). The RECIPIENT must confirm with ECOLOGY that complete and correct data was successfully uploaded, find instructions at
https://ecology.wa.gov/Research-Data/Data-resources/Environmental-Information-Management-database

2.4 CONTRACTS AND SUBAWARDS
The RECIPIENT may execute one or more subcontracts (professional services agreements). Selection of subcontractor

by RECIPIENT must comply with applicable provisions of 2 CFR Part 200 and the EPA Subaward Policy, which may be found at https://www.epa.gov/grants/grants-policy-issuance-gpi-16-01-epa-subaward-policy-epa-assistance-agreement-recipients. A meeting(s) may be held to clarify the scope, schedule, and deliverables. The RECIPIENT and subcontractor will execute the contract and hold a kick-off meeting.

Task Goal Statement:
Properly managed and fully documented project that meets ECOLOGY's grant or loan administrative requirements.

Task Expected Outcome:
* Timely and complete submittal of requests for reimbursement, quarterly progress reports, EAGL closeout report, and final project report.
* Properly maintained project documentation

Recipient Task Coordinator: Jeff Donovan

Project Administration and Reporting

Deliverables

Number	Description	Due Date
2.1	Quarterly Progress Reporting	05/14/2027
2.2	Recipient Close Out Report Completed in EAGL	
2.3	EIM Data Reporting	
2.4	Copy(s) of final consultant contract(s) subawards. Upload to EAGL and notify PM and FM.	

SCOPE OF WORK

Task Number: 3 **Task Cost:** $110,000.00

Task Title: Field Sampling and Lab Analysis

Task Description:
Task 3 describes the sampling and analytical lab testing associated with two quarterly sampling events.

3.1 FIELD SAMPLING
The RECIPIENT will complete two quarterly PFAS sampling events in accordance with the sampling plan identified in the QAPP. The QAPP will include elements for a detailed sampling plan, with an overview and summary of sampling locations as well as criteria and justification for the selection of those sampling locations, a basic summary of sampling methodology for each site, as well as proposed times and dates, or criteria for selection of time and dates (i.e., if certain environmental conditions are necessary for sampling at certain sites) of sampling. Sampling locations will be strategically and spatially spread throughout the system to be able to accurately characterize PFAS throughout the City's wastewater system.

Potential sampling locations may include:
- Collection System (Domestic/Commercial)
- Collection System (Interceptor)
- Prioritized Sources (Industrial)
- Septic Receiving Station
- RPWRF Influent and Effluent
- Historical Biosolids Land Application Sites
- Biosolids (prior to land application)
- Farm Soils (prior to land application
- Targeted Stormwater MS4 outfalls

Given the expedited schedule associated with this funding source, the RECIPIENT proposes to conduct two quarterly sampling events using the requested funds. However, the Sampling Plan developed under Task 3.1 will be structured to encompass a full year of sampling to support a comprehensive characterization that reflects seasonal variability. Should additional funding become available, the RECIPIENT would seek to implement a subsequent phase of sampling to capture the remaining two quarterly periods.

3.2 ANALYTICAL TESTING
The RECIPIENT will utilize a third-party laboratory to analyze the collected PFAS samples. The laboratory (to be identified) will be expected to utilize EPA Method 1633A to analyze all samples.

Task Goal Statement:
The goal of this task is to implement systemwide PFAS sampling in accordance with the approved QAPP to begin the process of generating comprehensive data on PFAS occurrence and variability within the City's wastewater system. Initial efforts will focus on completing two quarterly sampling events under the available funding, while maintaining a framework that supports a full year of seasonal characterization should additional funding become available.

Task Expected Outcome:

The RECIPIENT will collect system-wide samples for two quarterly sampling events and send said samples to a 3rd party laboratory for analytical testing. The resulting analytical dataset will be the critical first step for developing the mass balance and PFAS Characterization Study framework proposed under Task 4.

Recipient Task Coordinator: Lorena Croucher

Field Sampling and Lab Analysis

Deliverables

Number	Description	Due Date
3.1	Quarterly Summary of System Wide Sampling Events	06/04/2027
3.2	Copy of Analytical Testing Results (3rd Party Lab TBD)	

SCOPE OF WORK

Task Number: 4 **Task Cost:** $87,000.00

Task Title: Wastewater System PFAS Characterization Study

Task Description:
Task 4 describes the reporting needs associated with the PFAS sampling events.

4.1 DEVELOP PFAS CHARACTERIZATION STUDY REPORT
Develop a report that summarizes the results of the two quarterly sampling events identified in Task 3.
The RECIPIENT will develop an interim report that communicates the results of the systemwide PFAS Characterization Study conducted across the City's wastewater collection system, the Riverside Park Water Reclamation Facility (RPWRF), and associated biosolids management and land application areas. The report will synthesize sampling results, analytical findings, and data interpretation to support informed decision making and future planning.
Given the limited dataset that will be generated through the initial two quarters of sampling, there may not be enough data to fully inform the larger study goals laid out in the overview section of this SOW. Given these constraints, sampling and analysis in future quarters is envisioned which would build enough baseline data to inform those objectives, should funding be available. The interim report will include the initial understanding of the following components, where possible:
- Collection System Baseline Characterization: Summary of PFAS occurrence, concentration ranges, and spatial patterns across representative wastewater streams and identified source areas within the collection system.
- RPWRF Mass Balance Assessment: Evaluation of PFAS fate and transport through the treatment process, including influent, effluent, and biosolids pathways.
- Biosolids and Land Application Site Characterization: Assessment of PFAS concentrations in biosolids and representative farm land application locations.
- Implications for Human Health and the Environment: Discussion of findings in the context of population based human health considerations, regulatory benchmarks, and potential exposure pathways relevant to the service area and receiving communities.
- Recommendations: Identification of potential mitigation strategies, data gaps, and priorities for additional monitoring or study.

The report will focus on geographic areas served by the City's wastewater system, including urban and industrial areas contributing to the collection system and rural agricultural areas where biosolids are managed and applied. Findings will be presented in a clear, accessible manner to support transparency and understanding among technical staff, decision-makers, and the broader community.

The final report will serve as a key project deliverable and a foundational resource for future PFAS management, regulatory coordination, and community engagement.

The RECIPIENT anticipates utilizing a consultant to complete this task via an MRSC roster selection process to select the consultant.

Task Goal Statement:
The goal of this task is to produce a clear, comprehensive, and technically defensible summary report that characterizes

PFAS sampling data collected to date. Over time, and as additional data is collected, the report is intended to inform decision-making around future PFAS management actions available to the City.

Task Expected Outcome:
Summary report of PFAS sampling events conducted to date, including characterization observations and recommended next steps.

Recipient Task Coordinator: Lorena Croucher

Wastewater System PFAS Characterization Study

Deliverables

Number	Description	Due Date
4.1	Wastewater System PFAS Characterization Study	

SCOPE OF WORK

Task Number: 5 **Task Cost:** $

Task Title: Broader Impacts and Communication

Task Description:
The recipient will communicate project outcomes, lessons learned, and recommendations.

5.1 BROADER IMPACTS
This subtask should note work product, focus audience, method, purpose of communication.

The RECIPIENT will present updates, initial results and findings, barriers or challenges, and potential next steps, at monthly SRTAC meetings.

5.2 DRAFT FINAL REPORT
The RECIPIENT will complete a Draft Final Report. The Draft Final Report will summarize methods, results, lessons learned, recommendations for future work, and a map (as applicable showing sample site locations, draft plans etc.). The final report will also include ….

ECY will have 30 days to review the draft Final Report and provide feedback.

5.3 FINAL REPORT
The RECIPIENT will complete a final report that incorporates the feedback and comments from ECY and other partners (Subtask 5.2). The final report will summarize methods, results, lessons learned, and recommendations for future work.

Task Goal Statement:
The goal of this Task is to communicate the impact and success of the project to the broader community.

Task Expected Outcome:
Presentation of initial findings at SRTAC. Final Report.

Broader Impacts and Communication

Deliverables

Number	Description	Due Date
5.1	Notes and summary of information presented at SRTAC meetings uploaded to EAGL.	
5.2	Draft Final Report uploaded to EAGL. Notify PM and FM for 30 day review and comment period.	
5.3	Final Report uploaded to EAGL. Notify PM and FM.	

BUDGET

Funding Distribution EG270079

NOTE: *The above funding distribution number is used to identify this specific agreement and budget on payment remittances and may be referenced on other communications from ECOLOGY. Your agreement may have multiple funding distribution numbers to identify each budget.*

Funding Title: Spokane Basin Toxics Reduction
Funding Type: Grant
Funding Effective Date: 06/01/2026 Funding Expiration Date: 06/30/2027
Funding Source:

Title: Model Toxics Control Account

Fund: FD
Type: State
Funding Source %: 100%
Description: Spokane River Toxics Reduction funding

Approved Indirect Costs Rate: Approved State Indirect Rate: 0%
Recipient Match %: 0%
InKind Interlocal Allowed: No
InKind Other Allowed: No
Is this Funding Distribution used to match a federal grant? No

Spokane Basin Toxics Reduction	**Task Total**
Project Development	$ 17,000.00
Project Administration and Reporting	$ 0.00
Field Sampling and Lab Analysis	$ 110,000.00
Wastewater System PFAS Characterization Study	$ 87,000.00
Broader Impacts and Communication	$ 0.00
	Total: $ 214,000.00

Funding Distribution Summary

Recipient / Ecology Share

Funding Distribution Name	Recipient Match %	Recipient Share	Ecology Share	Total
Spokane Basin Toxics Reduction	0.00 %	$ 0.00	$ 214,000.00	$ 214,000.00
Total		**$ 0.00**	**$ 214,000.00**	**$ 214,000.00**

AGREEMENT SPECIFIC TERMS AND CONDITIONS

N/A

SPECIAL TERMS AND CONDITIONS

Agreement Conditions

Columbia River Basin Restoration Program
EPA Programmatic Conditions

The RECIPIENT agrees to comply with the current EPA general terms and conditions https://www.epa.gov/grants/epa-general-terms-and-conditions-effective-october-1-2023-or-later and outlined below. These terms and conditions are in addition to the assurances and certifications made as part of the award and terms, conditions or restrictions reflected on the official assistance award document.

The RECIPIENT shall review and comply with any applicable statutes, regulations, and executive orders in https://www.epa.gov/grants/epa-subaward-cross-cutter-requirements.

A. Competency of Organizations Generating Environmental Measurement Data
In accordance with Agency Policy Directive Number FEM-2012-02, Policy to Assure the Competency of Organizations Generating Environmental Measurement Data under Agency-Funded Assistance Agreements, RECIPIENT agrees, by entering into this Agreement, that it has demonstrated competency prior to award, or alternatively, where a pre-award demonstration of competency is not practicable, RECIPIENT agrees to demonstrate competency prior to carrying out any activities under the award involving the generation or use of environmental data. RECIPIENT shall maintain competency for the duration of the project period of this Agreement and this will be documented during the annual reporting process. A copy of the Policy is available online at https://www.epa.gov/sites/production/files/2015-03/documents/competency-policy-aaia-new.pdf or a copy may also be requested by contacting the EPA Project Officer for this award.
B. Quality Assurance – Quality Assurance Requirements (2 CFR 1500.11)
Authority: Quality Assurance applies to all assistance agreements involving environmental information as defined in 2 C.F.R. § 1500.12 Quality Assurance.
ECOLOGY shall ensure that projects involving environmental information issued under this Agreement include appropriate quality requirements for the work. ECOLOGY shall ensure RECIPIENTS develop and implement one of

the following Quality Assurance (QA) planning documents in accordance with this term and condition; and/or ensure subaward recipients implement all applicable approved QA planning documents.

1. Quality Management Plan (QMP)

a. Prior to beginning environmental information operations, the RECIPIENT must:

i. Develop a QMP,

ii. Prepare the QMP in accordance with the current version of EPA's Quality Management Plan (QMP) Standard.

iii. Submit the QMP for EPA review, and

iv. Obtain EPA Quality Assurance Manager or designee (hereafter referred to as QAM) approval.

OR

i. Submit a previously EPA-approved and current QMP,

ii. The EPA Quality Assurance Manager or designee (hereafter referred to as QAM) will notify the recipient and EPA Project Officer (PO) in writing if the QMP is acceptable for this Agreement.

b. The RECIPIENT must submit the QMP no more than 120 days after grant award.

c. The RECIPIENT must review their approved QMP annually. These documented reviews shall be made available to the sponsoring EPA organization if requested. When necessary, the RECIPIENT shall revise its QMP to incorporate minor changes and notify the EPA PO and QAM of the changes. If significant changes have been made to the Quality Program that affect the performance of environmental information operations, it may be necessary to re-submit the entire QMP for re-approval. In general, a copy of any QMP revision(s) made during the year should be submitted to the EPA PO and QAM in writing when such changes occur. Conditions requiring the revision and resubmittal of an approved QMP can be found in section 6 of EPA's Quality Management Plan (QMP) Standard.

2. Quality Assurance Project Plan (QAPP)

a. Prior to beginning environmental information operations, the RECIPIENT must:

i. Develop a QAPP,

ii. Prepare QAPP in accordance with the current version of EPA's Quality Assurance Project Plan (QAPP) Standard

iii. Submit the document for EPA review, and

iv. Obtain EPA Quality Assurance Manager or designee (hereafter referred to as QAM) approval.

OR

i. Submit a previously EPA-approved QAPP proposed to ensure the collected, produced, evaluated, or used environmental information is of known and documented quality for the intended use(s).

ii. The EPA Quality Assurance Manager or designee (hereafter referred to as QAM) will notify the recipient and EPA Project Officer (PO) in writing if the previously EPA-approved QAPP is acceptable for this Agreement.

OR

i. Provide EPA a copy of the recipient-approved QAPP if the RECIPIENT has an EPA-approved Quality Management Plan and a current EPA delegation to review and approve QAPPs.

b. ECOLOGY must submit the QAPP no more than 120 days after grant award.

c. The RECIPIENT shall notify the PO and QAM when substantive changes are needed to the QAPP. EPA may require the QAPP be updated and re-submitted for approval.

d. The RECIPIENT must review their approved QAPP annually. The results of the QAPP review and any revisions must be submitted to the PO and the QAM annually and may also be submitted when changes occur.

For Reference:

• Quality Management Plan (QMP) Standard and EPA's Quality Assurance Project Plan (QAPP) Standard contain quality specifications for EPA and non-EPA organizations and definitions applicable to these terms and conditions.

• EPA QA/G-5: Guidance for Quality Assurance Project Plans

• EPA's Quality Program website has a list of QA managers, and Non-EPA Organizations Quality Specifications.

• The Office of Grants and Debarment Implementation of Quality Assurance Requirements for Organizations receiving EPA Financial Assistance

C. Use of Logos

If the EPA logo is appearing along with logos from other participating entities on websites, outreach materials, or reports, it must not be prominently displayed to imply that any of the recipient or subrecipient's activities are being conducted by the EPA. Instead, the EPA logo should be accompanied by a statement indicating that the [Washington Department of Ecology or subrecipient NAME] received financial support from the EPA under an Assistance Agreement. More information is available at: https://www.epa.gov/stylebook/using-epa-seal-and-logo#policy

D. Geospatial Data Standards

All geospatial data created must be consistent with Federal Geographic Data Committee (FGDC) endorsed standards. Information on these standards may be found at www.fgdc.gov.

E. WQX Requirement (Updated STORET Condition – Water Quality Exchange Replaces STORET)

RECIPIENTS are required to institute standardized reporting requirements into their work plans and include such costs in their budgets. All water quality data generated in accordance with an EPA approved Quality Assurance Project Plan as a result of this assistance Agreement, either directly or by subaward, will be required to be transmitted into the Water Quality Portal (WQP) using either WQX or WQX web. Water quality data appropriate for the Water Quality Portal (WQP) include physical, chemical, and biological sample results for water, sediment and fish tissue. The data will include toxicity data, microbiological data, and the metrics and indices generated from biological and habitat data. The Water Quality Exchange (WQX) is the water data schema associated with the EPA, State and Tribal Exchange Network. Using the WQX schema partners map their database structure to the Water Quality Portal structure. WQX web is a web-based tool to convert data into the WQX format for smaller data generators that are not direct partners on the Exchange Network. More information about WQX, WQX web, and the Water Quality Portal, including tutorials, can be found at https://www.epa.gov/waterdata/water-quality-data-wqx . If activities submitted match for this federal assistance Agreement involve the generation of water quality data, the resulting information must be publicly accessible (in the Water Quality Portal or some other database). RECIPIENTS are encouraged to develop a cross walk between any non-WQX database utilized for the storage of water quality data associated with match activities and EPA's Water Quality Exchange (WQX).

F. Investing in America Signage Required Term and Condition (Updated May 11, 2023)

This Term & Condition applies to (1) construction and infrastructure projects funded in whole or in part by the Infrastructure Investment and Jobs Act (IIJA) and (2) construction and infrastructure projects funded in whole or in part by the Inflation Reduction Act (IRA).

1. Signage Requirements

a. Investing in America Emblem: The RECIPIENT will ensure that a sign is placed at construction sites supported in whole or in part by this award displaying the official Investing in America emblem and must identify the project as a “project funded by President Biden's Bipartisan Infrastructure Law” or “project funded by President Biden's Inflation Reduction Act” as applicable. The sign must be placed at construction sites in an easily visible location that can be directly linked to the work taking place and must be maintained in good condition throughout the construction period. The RECIPIENT will ensure compliance with the guidelines and design specifications provided by EPA for using the official Investing in America emblem available at: https:
//www.epa.gov/invest/investingamerica-signage.

b. Procuring Signs: Consistent with section 6002 of RCRA, 42 U.S.C. 6962, and 2 CFR 200.323, RECIPIENTS are encouraged to use recycled or recovered materials when procuring signs. Signage costs are considered an allowable cost under this assistance agreement provided that the costs associated with signage are reasonable. Additionally, to increase public awareness of projects serving communities where English is not the predominant language, RECIPIENTS are encouraged to translate the language on signs (excluding the official Investing in America emblem or EPA logo or seal) into the appropriate non-English language(s). The costs of such translation are allowable, provided the costs are reasonable.

G. Public or Media Events

ECOLOGY encourages the RECIPIENT to notify ECOLOGY of public or media events publicizing the accomplishment of significant events related to construction projects as a result of this Agreement and provide the

opportunity for attendance and participation by federal representatives with at least ten (10) working days' notice.
H. Build America, Buy America (applicable to all funding from May 14, 2022, and forward)
The RECIPIENT is subject to the Buy America Sourcing requirements under the Build America, Buy America provisions of the Infrastructure Investment and Jobs Act (IIJA) (P.L. 117-58, §§70911-70917) for the types of infrastructure projects under the EPA program and activities specified in EPA's Identification of Federal Financial Assistance Infrastructure Programs Subject to the Build America, Buy America Provisions of the Infrastructure Investment and Jobs Act. None of the funds provided under this award may be used for a project of infrastructure unless all iron and steel, manufactured products, and construction materials that are consumed in, incorporated into, or affixed to an infrastructure project are produced in the United States. The Buy America preference requirement applies to an entire infrastructure project, even if it is funded by both Federal and non- Federal funds. The RECIPIENT must implement these requirements in its procurements, and these requirements must flow down to all subawards and contracts at any tier. For legal definitions and sourcing requirements, the RECIPIENT must consult EPA's Build America, Buy America website and the Office of Management and Budget's (OMB) Memorandum M-22-11, Initial Implementation Guidance on Application of Buy America Preference in Federal Financial Assistance Programs for Infrastructure.
1. When supported by rationale provided in IIJA §70914, the RECIPIENT may submit a waiver request to EPA. RECIPIENTS should request guidance on the submission instructions of an EPA waiver request from the EPA Project Officer for this Agreement. A list of approved EPA waivers (general applicability and project specific) is available on the EPA Build America, Buy America website.
2. For questions regarding the applicability of the Build America, Buy America Act requirements to this assistance Agreement or if there is an approved waiver in place, please contact the EPA Project Officer for this Agreement.

I. Information Collection Requirements

The RECIPIENT agrees to comply with the requirements of the Paperwork Reduction Act in completing the project. If the scope of work includes a survey, a questionnaire or similar information-gathering activity, the Paperwork Reduction Act of 1995 (44 U.S.C. 3501 et seq.), requires ECOLOGY clearance prior to the RECIPIENT'S collection of information by means of identical questions posed to 10 or more persons.
The RECIPIENT will provide to the ECOLOGY Project Manager the following information: (1) description of the information to be collected; (2) explanation of the need for the information; and (3) to whom the survey is being directed.

J. Recognition of EPA Funding
The RECIPIENT agrees that all reports, documents, signage, videos, or other media, developed as part of this Agreement shall contain the following statement:
"This project has been funded wholly or in part by the United States Environmental Protection Agency under assistance agreement PC-01J95801-2 to the Washington State Department of Ecology. The contents of this document do not necessarily reflect the views and policies of the Environmental Protection Agency, nor does mention of trade names or commercial products constitute endorsement or recommendation for use."

K. Riparian Buffers

Riparian buffer restoration projects in agricultural areas shall be consistent with the current Water Quality Combined Funding Program guidelines. The RECIPIENT shall submit in writing a projects' consistency with the recommendations referenced above. When developing project proposals, the RECIPIENT should consider the extent to which proposals include appropriate riparian buffers or otherwise address pollution sources on other water courses

on the properties in the project area to support water quality and salmon recovery. Deviations can only be obtained through an exception approved by ECOLOGY. In order for ECOLOGY to evaluate a request for an exception, the RECIPIENT must submit the scientific rationale demonstrating adequacy of buffers for supporting water quality and salmon recovery. The request must summarize tribal input on the scientific rationale or other relevant issues. The scientific rationale could be developed from sources such as site-specific assessment data, salmon recovery plans, Total Maximum Daily Loads (TMDLs) and the state nonpoint plan. ECOLOGY will confer with EPA, the National Oceanic and Atmospheric Administration (NOAA) and the Washington Department of Ecology and provide the opportunity for affected tribes to consult with ECOLOGY before making a final decision on a deviation request.

L. Cybersecurity

(a) The RECIPIENT agrees that when collecting and managing environmental data under this Agreement, it will protect the data by following all applicable State law cybersecurity requirements.
(b) (1) ECOLOGY must ensure that any connections between the RECIPIENT's network or information system and ECOLOGY networks used by the RECIPIENT to transfer data under this Agreement, are secure.

For purposes of this Section, a connection is defined as a dedicated persistent interface between an Agency IT system and an external IT system for the purpose of transferring information. Transitory, user-controlled connections such as website browsing are excluded from this definition.

If the RECIPIENT's connections as defined above do not go through the Environmental Information Exchange Network or EPA's Central Data Exchange, the RECIPIENT agrees to contact the ECOLOGY Project Manager and work with the designated Regional/Headquarters Information Security Officer to ensure that the connections meet ECOLOGY security requirements, including entering into Interconnection Service Agreements as appropriate. This condition does not apply to manual entry of data by the RECIPIENT into systems operated and used by ECOLOGY and EPA's regulatory programs for the submission of reporting and/or compliance data.

(2) The RECIPIENT agrees that any subawards it makes under this agreement will require the subrecipient to comply with the requirements in (b)(1) if the subrecipient's network or information system is connected to EPA networks to transfer data to the Agency using systems other than the Environmental Information Exchange Network or EPA's Central Data Exchange. The RECIPIENT will be in compliance with this condition: by including this requirement in subaward agreements; and during subrecipient monitoring deemed necessary by the recipient under 2 CFR 200.331(d), by inquiring whether the subrecipient has contacted the ECOLOGY Project Manager. Nothing in this condition requires the RECIPIENT to contact ECOLOGY Project Manager on behalf of a subrecipient or to be involved in the negotiation of an Interconnection Service Agreement between the subrecipient and the ECOLOGY.

GENERAL FEDERAL CONDITIONS

If a portion or all of the funds for this agreement are provided through federal funding sources or this agreement is used to match a federal grant award, the following terms and conditions apply to you.

A. CERTIFICATION REGARDING SUSPENSION, DEBARMENT, INELIGIBILITY OR VOLUNTARY EXCLUSION:

1. The RECIPIENT/CONTRACTOR, by signing this agreement, certifies that it is not suspended, debarred, proposed for debarment, declared ineligible or otherwise excluded from contracting with the federal government, or from receiving contracts paid for with federal funds. If the RECIPIENT/CONTRACTOR is unable to certify to the statements contained in the certification, they must provide an explanation as to why they cannot.

2. The RECIPIENT/CONTRACTOR shall provide immediate written notice to ECOLOGY if at any time the RECIPIENT/CONTRACTOR learns that its certification was erroneous when submitted or had become erroneous by reason of changed circumstances.
3. The terms covered transaction, debarred, suspended, ineligible, lower tier covered transaction, participant, person, primary covered transaction, principal, proposal, and voluntarily excluded, as used in this clause, have the meaning set out in the Definitions and Coverage sections of rules implementing Executive Order 12549. You may contact ECOLOGY for assistance in obtaining a copy of those regulations.
4. The RECIPIENT/CONTRACTOR agrees it shall not knowingly enter into any lower tier covered transaction with a person who is proposed for debarment under the applicable Code of Federal Regulations, debarred, suspended, declared ineligible, or voluntarily excluded from participation in this covered transaction.
5. The RECIPIENT/CONTRACTOR further agrees by signing this agreement, that it will include this clause titled "CERTIFICATION REGARDING SUSPENSION, DEBARMENT, INELIGIBILITY OR VOLUNTARY EXCLUSION" without modification in all lower tier covered transactions and in all solicitations for lower tier covered transactions.
6. Pursuant to 2CFR180.330, the RECIPIENT/CONTRACTOR is responsible for ensuring that any lower tier covered transaction complies with certification of suspension and debarment requirements.
7. RECIPIENT/CONTRACTOR acknowledges that failing to disclose the information required in the Code of Federal Regulations may result in the delay or negation of this funding agreement, or pursuance of legal remedies, including suspension and debarment.
8. RECIPIENT/CONTRACTOR agrees to keep proof in its agreement file, that it, and all lower tier recipients or contractors, are not suspended or debarred, and will make this proof available to ECOLOGY before requests for reimbursements will be approved for payment. RECIPIENT/CONTRACTOR must run a search in <http://www.sam.gov> and print a copy of completed searches to document proof of compliance.

B. FEDERAL FUNDING ACCOUNTABILITY AND TRANSPARENCY ACT (FFATA) REPORTING REQUIREMENTS:

CONTRACTOR/RECIPIENT must complete the FFATA Data Collection Form (ECY 070-395) and return it with the signed agreement to ECOLOGY.

Any CONTRACTOR/RECIPIENT that meets each of the criteria below must report compensation for its five top executives using the FFATA Data Collection Form.

- Receives more than $30,000 in federal funds under this award.
- Receives more than 80 percent of its annual gross revenues from federal funds.
- Receives more than $25,000,000 in annual federal funds.

Ecology will not pay any invoices until it has received a completed and signed FFATA Data Collection Form. Ecology is required to report the FFATA information for federally funded agreements, including the required Unique Entity Identifier in www.sam.gov <http://www.sam.gov/> within 30 days of agreement signature. The FFATA information will be available to the public at www.usaspending.gov <http://www.usaspending.gov/>.

For more details on FFATA requirements, see www.fsrs.gov <http://www.fsrs.gov/>.

C. FEDERAL FUNDING PROHIBITION ON CERTAIN TELECOMMUNICATIONS OR VIDEO SURVEILLANCE SERVICES OR EQUIPMENT:

As required by 2 CFR 200.216, federal grant or loan recipients and subrecipients are prohibited from obligating or

expending loan or grant funds to:

1. Procure or obtain;
2. Extend or renew a contract to procure or obtain; or
3. Enter into a contract (or extend or renew a contract) to procure or obtain equipment, services, or systems that use covered telecommunications equipment, video surveillance services or services as a substantial or essential component of any system, or as critical technology as part of any system. As described in Public Law 115-232 <https://www.govinfo.gov/content/pkg/PLAW-115publ232/pdf/PLAW-115publ232.pdf>, section 889, covered telecommunications equipment is telecommunications equipment produced by Huawei Technologies Company or ZTE Corporation (or any subsidiary or affiliate of such entities).

Recipients, subrecipients, and borrowers also may not use federal funds to purchase certain prohibited equipment, systems, or services, including equipment, systems, or services produced or provided by entities identified in section 889, are recorded in the System for Award Management (SAM) <https://sam.gov/SAM/> exclusion list.

GENERAL TERMS AND CONDITIONS

Pertaining to Grant and Loan Agreements With the state of Washington, Department of Ecology

GENERAL TERMS AND CONDITIONS
For DEPARTMENT OF ECOLOGY GRANTS and LOANS
03/11/2026 Version

1. ADMINISTRATIVE REQUIREMENTS

a) RECIPIENT shall follow the "Administrative Requirements for Recipients of Ecology Grants and Loans – EAGL Edition." https://apps.ecology.wa.gov/publications/UIPages/SummaryPages/2601001.html
b) RECIPIENT shall complete all activities funded by this Agreement and be fully responsible for the proper management of all funds and resources made available under this Agreement.
c) RECIPIENT agrees to take complete responsibility for all actions taken under this Agreement, including ensuring all subgrantees and contractors comply with the terms and conditions of this Agreement. ECOLOGY reserves the right to request proof of compliance by subgrantees and contractors.
d) RECIPIENT's activities under this Agreement shall be subject to the review and approval by ECOLOGY for the extent and character of all work and services.

2. AMENDMENTS AND MODIFICATIONS

This Agreement may be altered, amended, or waived only by a written amendment executed by both parties. No subsequent modification(s) or amendment(s) of this Agreement will be of any force or effect unless in writing and signed by authorized representatives of both parties. ECOLOGY and the RECIPIENT may change their respective staff contacts and administrative information without the concurrence of either party.

3. ACCESSIBILITY REQUIREMENTS FOR COVERED TECHNOLOGY

The RECIPIENT must comply with the Washington State Office of the Chief Information Officer, OCIO Policy no. 188, Accessibility (https://ocio.wa.gov/policy/accessibility) as it relates to "covered technology." This requirement applies to all products supplied under the Agreement, providing equal access to information technology by individuals with disabilities, including and not limited to web sites/pages, web-based applications, software systems, video and audio content, and electronic documents intended for publishing on Ecology's public web site.

4. ARCHAEOLOGICAL AND CULTURAL RESOURCES

RECIPIENT shall take all reasonable action to avoid, minimize, or mitigate adverse effects to archaeological and historic archaeological sites, historic buildings/structures, traditional cultural places, sacred sites, or other cultural resources, hereby referred to as Cultural Resources.
The RECIPIENT must agree to hold harmless ECOLOGY in relation to any claim related to Cultural Resources discovered, disturbed, or damaged due to the RECIPIENT's project funded under this Agreement.
RECIPIENT shall:
a) Contact the ECOLOGY Program issuing the grant or loan to discuss any Cultural Resources requirements for their project:
• Cultural Resource Consultation and Review should be initiated early in the project planning process and must be completed prior to expenditure of Agreement funds as required by applicable State and Federal requirements.
* For state funded construction, demolition, or land acquisitions, comply with Governor Executive Order 21-02, Archaeological and Cultural Resources.
• For projects with any federal involvement, comply with the National Historic Preservation Act of 1966 (Section 106).

b) If required by the ECOLOGY Program, submit an Inadvertent Discovery Plan (IDP) to ECOLOGY prior to implementing any project that involves field activities. ECOLOGY will provide the IDP form.
RECIPIENT shall:
• Keep the IDP at the project site.
• Make the IDP readily available to anyone working at the project site.
• Discuss the IDP with staff, volunteers, and contractors working at the project site.
• Implement the IDP when Cultural Resources or human remains are found at the project site.
c) If any Cultural Resources are found while conducting work under this Agreement, follow the protocol outlined in the project IDP.
• Immediately stop work and notify the ECOLOGY Program, who will notify the Department of Archaeology and Historic Preservation at (360) 586-3065, any affected Tribe, and the local government.
d) If any human remains are found while conducting work under this Agreement, follow the protocol outlined in the project IDP.
• Immediately stop work and notify the local Law Enforcement Agency or Medical Examiner/Coroner's Office, the Department of Archaeology and Historic Preservation at (360) 790-1633, and then the ECOLOGY Program.
e) Comply with RCW 27.53, RCW 27.44, and RCW 68.50.645, and all other applicable local, state, and federal laws protecting Cultural Resources and human remains.

5. ASSIGNMENT
No right or claim of the RECIPIENT arising under this Agreement shall be transferred or assigned by the RECIPIENT.

6. COMMUNICATION
RECIPIENT shall make every effort to maintain effective communications with the RECIPIENT's designees, ECOLOGY, all affected local, state, or federal jurisdictions, and any interested individuals or groups.

7. COMPENSATION
a) Any work performed prior to effective date of this Agreement will be at the sole expense and risk of the RECIPIENT. ECOLOGY must sign the Agreement before any payment requests can be submitted.
b) Payments will be made on a reimbursable basis for approved and completed work as specified in this Agreement.
c) RECIPIENT is responsible to determine if costs are eligible. Any questions regarding eligibility should be clarified with ECOLOGY prior to incurring costs. Costs that are conditionally eligible require approval by ECOLOGY prior to expenditure.
d) RECIPIENT shall not invoice more than once per month unless agreed on by ECOLOGY.
e) ECOLOGY will not process payment requests without the proper reimbursement forms, Progress Report and supporting documentation. ECOLOGY will provide instructions for submitting payment requests.
f) ECOLOGY will pay the RECIPIENT thirty (30) days after receipt of a properly completed request for payment.
g) RECIPIENT will receive payment through Washington State's Office of Financial Management's Statewide Payee Desk. To receive payment you must register as a statewide vendor by submitting a statewide vendor registration form and an IRS W-9 form at website, https://ofm.wa.gov/tech-support/statewide-vendor-payee-services/. If you have questions about the vendor registration process, you can contact Statewide Payee Help Desk at (360) 407-8180 or email SupplierRegistration@ofm.wa.gov.
h) ECOLOGY may, at its sole discretion, withhold payments claimed by the RECIPIENT if the RECIPIENT fails to satisfactorily comply with any term or condition of this Agreement.
i) Monies withheld by ECOLOGY may be paid to the RECIPIENT when the work described herein, or a portion thereof, has been completed if, at ECOLOGY's sole discretion, such payment is reasonable and approved according to this Agreement, as appropriate, or upon completion of an audit as specified herein.

j) RECIPIENT must submit within thirty (30) days after the expiration date of this Agreement, all financial, performance, and other reports required by this Agreement. Failure to comply may result in delayed reimbursement.

8. COMPLIANCE WITH ALL LAWS

RECIPIENT agrees to comply fully with all applicable federal, state and local laws, orders, regulations, and permits related to this Agreement, including but not limited to:

a) RECIPIENT agrees to comply with all applicable laws, regulations, and policies of the United States and the State of Washington which affect wages and job safety.

b) RECIPIENT agrees to be bound by all applicable federal and state laws, regulations, and policies against discrimination.

c) RECIPIENT certifies full compliance with all applicable state industrial insurance requirements.

d) RECIPIENT agrees to secure and provide assurance to ECOLOGY that all the necessary approvals and permits required by authorities having jurisdiction over the project are obtained. RECIPIENT must include time in their project timeline for the permit and approval processes.

ECOLOGY shall have the right to immediately terminate for cause this Agreement as provided herein if the RECIPIENT fails to comply with above requirements.

If any provision of this Agreement violates any statute or rule of law of the state of Washington, it is considered modified to conform to that statute or rule of law.

9. CONFLICT OF INTEREST

RECIPIENT and ECOLOGY agree that any officer, member, agent, or employee, who exercises any function or responsibility in the review, approval, or carrying out of this Agreement, shall not have any personal or financial interest, direct or indirect, nor affect the interest of any corporation, partnership, or association in which he/she is a part, in this Agreement or the proceeds thereof.

10. CONTRACTING FOR GOODS AND SERVICES

RECIPIENT may contract to buy goods or services related to its performance under this Agreement. RECIPIENT shall award all contracts for construction, purchase of goods, equipment, services, and professional architectural and engineering services through a competitive process, if required by State law. RECIPIENT is required to follow procurement procedures that ensure legal, fair, and open competition.

RECIPIENT must have a standard procurement process or follow current state procurement procedures. RECIPIENT may be required to provide written certification that they have followed their standard procurement procedures and applicable state law in awarding contracts under this Agreement.

ECOLOGY reserves the right to inspect and request copies of all procurement documentation, and review procurement practices related to this Agreement. Any costs incurred as a result of procurement practices not in compliance with state procurement law or the RECIPIENT's normal procedures may be disallowed at ECOLOGY's sole discretion.

11. DISPUTES

When there is a dispute with regard to the extent and character of the work, or any other matter related to this Agreement the determination of ECOLOGY will govern, although the RECIPIENT shall have the right to appeal decisions as provided for below:

a) RECIPIENT notifies the funding program of an appeal request.

b) Appeal request must be in writing and state the disputed issue(s).

c) RECIPIENT has the opportunity to be heard and offer evidence in support of its appeal.

d) ECOLOGY reviews the RECIPIENT's appeal.

e) ECOLOGY sends a written answer within ten (10) business days, unless more time is needed, after concluding the

review.
The decision of ECOLOGY from an appeal will be final and conclusive, unless within thirty (30) days from the date of such decision, the RECIPIENT furnishes to the Director of ECOLOGY a written appeal. The decision of the Director or duly authorized representative will be final and conclusive.
The parties agree that this dispute process will precede any action in a judicial or quasi-judicial tribunal.
Appeals of the Director's decision will be brought in the Superior Court of Thurston County. Review of the Director's decision will not be taken to Environmental and Land Use Hearings Office.
Pending final decision of a dispute, the RECIPIENT agrees to proceed diligently with the performance of this Agreement and in accordance with the decision rendered.
Nothing in this Agreement will be construed to limit the parties' choice of another mutually acceptable method, in addition to the dispute resolution procedure outlined above.

12. ENVIRONMENTAL DATA STANDARDS

a) RECIPIENT shall prepare a Quality Assurance Project Plan (QAPP) for a project that collects or uses environmental measurement data. RECIPIENTS unsure about whether a QAPP is required for their project shall contact the ECOLOGY Program issuing the grant or loan. If a QAPP is required, the RECIPIENT shall:
• Use ECOLOGY's QAPP Template/Checklist provided by the ECOLOGY, unless ECOLOGY Quality Assurance (QA) officer or the Program QA coordinator instructs otherwise.
• Follow ECOLOGY's Guidelines for Preparing Quality Assurance Project Plans for Environmental Studies, July 2004 (Ecology Publication No. 04-03-030).
• Submit the QAPP to ECOLOGY for review and approval before the start of the work.
b) RECIPIENT shall submit environmental data that was collected on a project to ECOLOGY using the Environmental Information Management system (EIM), unless the ECOLOGY Program instructs otherwise. The RECIPIENT must confirm with ECOLOGY that complete and correct data was successfully loaded into EIM, find instructions at: http://www.ecy.wa.gov/eim.
c) RECIPIENT shall follow ECOLOGY's data standards when Geographic Information System (GIS) data is collected and processed. Guidelines for Creating and Accessing GIS Data are available at: https://ecology.wa.gov/Research-Data/Data-resources/Geographic-Information-Systems-GIS/Standards. RECIPIENT, when requested by ECOLOGY, shall provide copies to ECOLOGY of all final GIS data layers, imagery, related tables, raw data collection files, map products, and all metadata and project documentation.

13. GOVERNING LAW

This Agreement will be governed by the laws of the State of Washington, and the venue of any action brought hereunder will be in the Superior Court of Thurston County.

14. INDEMNIFICATION

ECOLOGY will in no way be held responsible for payment of salaries, consultant's fees, and other costs related to the project described herein, except as provided in the Scope of Work.
To the extent that the Constitution and laws of the State of Washington permit, each party will indemnify and hold the other harmless from and against any liability for any or all injuries to persons or property arising from the negligent act or omission of that party or that party's agents or employees arising out of this Agreement.

15. INDEPENDENT STATUS

The employees, volunteers, or agents of each party who are engaged in the performance of this Agreement will continue to be employees, volunteers, or agents of that party and will not for any purpose be employees, volunteers, or agents of the other party.

16. KICKBACKS

RECIPIENT is prohibited from inducing by any means any person employed or otherwise involved in this Agreement to give up any part of the compensation to which he/she is otherwise entitled to or receive any fee, commission, or gift in return for award of a subcontract hereunder.

17. MINORITY AND WOMEN'S BUSINESS ENTERPRISES (MWBE)

RECIPIENT is encouraged to solicit and recruit, to the extent possible, certified minority-owned (MBE) and women-owned (WBE) businesses in purchases and contracts initiated under this Agreement.
Contract awards or rejections cannot be made based on MWBE participation; however, the RECIPIENT is encouraged to take the following actions, when possible, in any procurement under this Agreement:
a) Include qualified minority and women's businesses on solicitation lists whenever they are potential sources of goods or services.
b) Divide the total requirements, when economically feasible, into smaller tasks or quantities, to permit maximum participation by qualified minority and women's businesses.
c) Establish delivery schedules, where work requirements permit, which will encourage participation of qualified minority and women's businesses.
d) Use the services and assistance of the Washington State Office of Minority and Women's Business Enterprises (OMWBE) (866-208-1064) and the Office of Minority Business Enterprises of the U.S. Department of Commerce, as appropriate.

18. ORDER OF PRECEDENCE

In the event of inconsistency in this Agreement, unless otherwise provided herein, the inconsistency shall be resolved by giving precedence in the following order: (a) applicable federal and state statutes and regulations; (b) The Agreement; (c) Scope of Work; (d) Special Terms and Conditions; (e) Any provisions or terms incorporated herein by reference, including the "Administrative Requirements for Recipients of Ecology Grants and Loans"; (f) Ecology Funding Program Guidelines; and (g) General Terms and Conditions.

19. PRESENTATION AND PROMOTIONAL MATERIALS

ECOLOGY reserves the right to approve RECIPIENT's communication documents and materials related to the fulfillment of this Agreement:
a) If requested, RECIPIENT shall provide a draft copy to ECOLOGY for review and approval ten (10) business days prior to production and distribution.
b) RECIPIENT shall include time for ECOLOGY's review and approval process in their project timeline.
c) If requested, RECIPIENT shall provide ECOLOGY two (2) final copies and an electronic copy of any tangible products developed.
Copies include any printed materials, and all tangible products developed such as brochures, manuals, pamphlets, videos, audio tapes, CDs, curriculum, posters, media announcements, or gadgets with a message, such as a refrigerator magnet, and any online communications, such as web pages, blogs, and twitter campaigns. If it is not practical to provide a copy, then the RECIPIENT shall provide a description (photographs, drawings, printouts, etc.) that best represents the item.
Any communications intended for public distribution that uses ECOLOGY's logo shall comply with ECOLOGY's graphic requirements and any additional requirements specified in this Agreement. Before the use of ECOLOGY's logo contact ECOLOGY for guidelines.
RECIPIENT shall acknowledge in the communications that funding was provided by ECOLOGY.

20. PROGRESS REPORTING

a) RECIPIENT must satisfactorily demonstrate the timely use of funds by submitting payment requests and progress

reports to ECOLOGY. ECOLOGY reserves the right to amend or terminate this Agreement if the RECIPIENT does not document timely use of funds.
b) RECIPIENT must submit a progress report with each payment request. Payment requests will not be processed without a progress report. ECOLOGY will define the elements and frequency of progress reports.
c) RECIPIENT shall use ECOLOGY's provided progress report format.
d) Quarterly progress reports will cover the periods from January 1 through March 31, April 1 through June 30, July 1 through September 30, and October 1 through December 31. Reports shall be submitted within thirty (30) days after the end of the quarter being reported.
e) RECIPIENT must submit within thirty (30) days of the expiration date of the project, unless an extension has been approved by ECOLOGY, all financial, performance, and other reports required by the Agreement and funding program guidelines. RECIPIENT shall use the ECOLOGY provided closeout report format.

21. PROPERTY RIGHTS

a) Copyrights and Patents. When the RECIPIENT creates any copyrightable materials or invents any patentable property under this Agreement, the RECIPIENT may copyright or patent the same but ECOLOGY retains a royalty free, nonexclusive, and irrevocable license to reproduce, publish, recover, or otherwise use the material(s) or property, and to authorize others to use the same for federal, state, or local government purposes.
b) Publications. When the RECIPIENT or persons employed by the RECIPIENT use or publish ECOLOGY information; present papers, lectures, or seminars involving information supplied by ECOLOGY; or use logos, reports, maps, or other data in printed reports, signs, brochures, pamphlets, etc., appropriate credit shall be given to ECOLOGY.
c) Presentation and Promotional Materials. ECOLOGY shall have the right to use or reproduce any printed or graphic materials produced in fulfillment of this Agreement, in any manner ECOLOGY deems appropriate. ECOLOGY shall acknowledge the RECIPIENT as the sole copyright owner in every use or reproduction of the materials.
d) Tangible Property Rights. ECOLOGY's current edition of "Administrative Requirements for Recipients of Ecology Grants and Loans," shall control the use and disposition of all real and personal property purchased wholly or in part with funds furnished by ECOLOGY in the absence of state and federal statutes, regulations, or policies to the contrary, or upon specific instructions with respect thereto in this Agreement.
e) Personal Property Furnished by ECOLOGY. When ECOLOGY provides personal property directly to the RECIPIENT for use in performance of the project, it shall be returned to ECOLOGY prior to final payment by ECOLOGY. If said property is lost, stolen, or damaged while in the RECIPIENT's possession, then ECOLOGY shall be reimbursed in cash or by setoff by the RECIPIENT for the fair market value of such property.
f) Acquisition Projects. The following provisions shall apply if the project covered by this Agreement includes funds for the acquisition of land or facilities:
1. RECIPIENT shall establish that the cost is fair value and reasonable prior to disbursement of funds provided for in this Agreement.
2. RECIPIENT shall provide satisfactory evidence of title or ability to acquire title for each parcel prior to disbursement of funds provided by this Agreement. Such evidence may include title insurance policies, Torrens certificates, or abstracts, and attorney's opinions establishing that the land is free from any impediment, lien, or claim which would impair the uses intended by this Agreement.
g) Conversions. Regardless of the Agreement expiration date, the RECIPIENT shall not at any time convert any equipment, property, or facility acquired or developed under this Agreement to uses other than those for which assistance was originally approved without prior written approval of ECOLOGY. Such approval may be conditioned upon payment to ECOLOGY of that portion of the proceeds of the sale, lease, or other conversion or encumbrance which monies granted pursuant to this Agreement bear to the total acquisition, purchase, or construction costs of such property.

22. RECORDS, AUDITS, AND INSPECTIONS

RECIPIENT shall maintain complete program and financial records relating to this Agreement, including any engineering documentation and field inspection reports of all construction work accomplished.
All records shall:
a) Be kept in a manner which provides an audit trail for all expenditures.
b) Be kept in a common file to facilitate audits and inspections.
c) Clearly indicate total receipts and expenditures related to this Agreement.
d) Be open for audit or inspection by ECOLOGY, or by any duly authorized audit representative of the State of Washington, for a period of at least three (3) years after the final grant payment or loan repayment, or any dispute resolution hereunder.
RECIPIENT shall provide clarification and make necessary adjustments if any audits or inspections identify discrepancies in the records.
ECOLOGY reserves the right to audit, or have a designated third party audit, applicable records to ensure that the state has been properly invoiced. Any remedies and penalties allowed by law to recover monies determined owed will be enforced. Repetitive instances of incorrect invoicing or inadequate records may be considered cause for termination.
All work performed under this Agreement and any property and equipment purchased shall be made available to ECOLOGY and to any authorized state, federal or local representative for inspection at any time during the course of this Agreement and for at least three (3) years following grant or loan termination or dispute resolution hereunder.
RECIPIENT shall provide right of access to ECOLOGY, or any other authorized representative, at all reasonable times, in order to monitor and evaluate performance, compliance, and any other conditions under this Agreement.

23. RECOVERY OF FUNDS

The right of the RECIPIENT to retain monies received as reimbursement payments is contingent upon satisfactory performance of this Agreement and completion of the work described in the Scope of Work.
All payments to the RECIPIENT are subject to approval and audit by ECOLOGY, and any unauthorized expenditure(s) or unallowable cost charged to this Agreement shall be refunded to ECOLOGY by the RECIPIENT.
RECIPIENT shall refund to ECOLOGY the full amount of any erroneous payment or overpayment under this Agreement.
RECIPIENT shall refund by check payable to ECOLOGY the amount of any such reduction of payments or repayments within thirty (30) days of a written notice. Interest will accrue at the rate of twelve percent (12%) per year from the time ECOLOGY demands repayment of funds.
Any property acquired under this Agreement, at the option of ECOLOGY, may become ECOLOGY's property and the RECIPIENT's liability to repay monies will be reduced by an amount reflecting the fair value of such property.

24. SEVERABILITY

If any provision of this Agreement or any provision of any document incorporated by reference shall be held invalid, such invalidity shall not affect the other provisions of this Agreement which can be given effect without the invalid provision, and to this end the provisions of this Agreement are declared to be severable.

25. STATE ENVIRONMENTAL POLICY ACT (SEPA)

RECIPIENT must demonstrate to ECOLOGY’s satisfaction that compliance with the requirements of the State Environmental Policy Act (Chapter 43.21C RCW and Chapter 197-11 WAC) have been or will be met. Any reimbursements are subject to this provision.

26. SUSPENSION

When in the best interest of ECOLOGY, ECOLOGY may at any time, and without cause, suspend this Agreement or any portion thereof for a temporary period by written notice from ECOLOGY to the RECIPIENT. RECIPIENT shall resume performance on the next business day following the suspension period unless another day is specified by ECOLOGY.

27. SUSTAINABLE PRACTICES

In order to sustain Washington's natural resources and ecosystems, the RECIPIENT is fully encouraged to implement sustainable practices and to purchase environmentally preferable products under this Agreement.

a) Sustainable practices may include such activities as: use of clean energy, use of double-sided printing, hosting low impact meetings, and setting up recycling and composting programs.

b) Purchasing may include such items as: sustainably produced products and services, EPEAT registered computers and imaging equipment, independently certified green cleaning products, remanufactured toner cartridges, products with reduced packaging, office products that are refillable, rechargeable, and recyclable, 100% post-consumer recycled paper, and toxic free products.

For more suggestions visit the Washington State Procurement Manual web page, Green Purchasing, https://des.wa.gov/purchase/washington-state-procurement-manual/green-purchasing.

28. TERMINATION

a) For Cause

ECOLOGY may terminate for cause this Agreement with a seven (7) calendar days prior written notification to the RECIPIENT, at the sole discretion of ECOLOGY, for failing to perform an Agreement requirement or for a material breach of any term or condition. If this Agreement is so terminated, the parties shall be liable only for performance rendered or costs incurred in accordance with the terms of this Agreement prior to the effective date of termination.

Failure to Commence Work. ECOLOGY reserves the right to terminate this Agreement if RECIPIENT fails to commence work on the project funded within four (4) months after the effective date of this Agreement, or by any date mutually agreed upon in writing for commencement of work, or the time period defined within the Scope of Work.

Non-Performance. The obligation of ECOLOGY to the RECIPIENT is contingent upon satisfactory performance by the RECIPIENT of all of its obligations under this Agreement. In the event the RECIPIENT unjustifiably fails, in the opinion of ECOLOGY, to perform any obligation required of it by this Agreement, ECOLOGY may refuse to pay any further funds, terminate in whole or in part this Agreement, and exercise any other rights under this Agreement. Despite the above, the RECIPIENT shall not be relieved of any liability to ECOLOGY for damages sustained by ECOLOGY and the State of Washington because of any breach of this Agreement by the RECIPIENT. ECOLOGY may withhold payments for the purpose of setoff until such time as the exact amount of damages due ECOLOGY from the RECIPIENT is determined.

b) For Convenience

ECOLOGY may terminate for convenience this Agreement, in whole or in part, for any reason when it is the best interest of ECOLOGY, with a thirty (30) calendar days prior written notification to the RECIPIENT, except as noted below. If this Agreement is so terminated, the parties shall be liable only for performance rendered or costs incurred in accordance with the terms of this Agreement prior to the effective date of termination.

Non-Allocation of Funds. ECOLOGY's ability to make payments is contingent on availability of funding. In the event funding from state, federal or other sources is withdrawn, reduced, or limited in any way after the effective date and prior to the completion or expiration date of this Agreement, ECOLOGY, at its sole discretion, may elect to terminate the Agreement, in whole or part, or renegotiate the Agreement, subject to new funding limitations or conditions. ECOLOGY may also elect to suspend performance of the Agreement until ECOLOGY determines the funding insufficiency is resolved. ECOLOGY may exercise any of these options with no notification or restrictions, although ECOLOGY will make a reasonable attempt to provide notice.

In the event of termination or suspension, ECOLOGY will reimburse eligible costs incurred by the RECIPIENT through the effective date of termination or suspension. Reimbursed costs must be agreed to by ECOLOGY and the RECIPIENT. In no event shall ECOLOGY's reimbursement exceed ECOLOGY's total responsibility under the Agreement and any amendments.

If payments have been discontinued by ECOLOGY due to unavailable funds, the RECIPIENT shall not be obligated to repay monies which had been paid to the RECIPIENT prior to such termination.
RECIPIENT's obligation to continue or complete the work described in this Agreement shall be contingent upon availability of funds by the RECIPIENT's governing body.

c) By Mutual Agreement
ECOLOGY and the RECIPIENT may terminate this Agreement, in whole or in part, at any time, by mutual written agreement.

d) In Event of Termination
All finished or unfinished documents, data studies, surveys, drawings, maps, models, photographs, reports or other materials prepared by the RECIPIENT under this Agreement, at the option of ECOLOGY, will become property of ECOLOGY and the RECIPIENT shall be entitled to receive just and equitable compensation for any satisfactory work completed on such documents and other materials.
Nothing contained herein shall preclude ECOLOGY from demanding repayment of all funds paid to the RECIPIENT in accordance with Recovery of Funds, identified herein.

29. THIRD PARTY BENEFICIARY
RECIPIENT shall ensure that in all subcontracts entered into by the RECIPIENT pursuant to this Agreement, the state of Washington is named as an express third party beneficiary of such subcontracts with full rights as such.

30. WAIVER
Waiver of a default or breach of any provision of this Agreement is not a waiver of any subsequent default or breach, and will not be construed as a modification of the terms of this Agreement unless stated as such in writing by the authorized representative of ECOLOGY.

End of General Terms and Conditions

Agenda Sheet for City Council:

Committee: PIES **Date:** 11/10/2026

Committee Agenda type: Reports, Contracts & Claims

Council Meeting Date: 12/02/2026

Date Rec'd	10/26/2026		
Clerk's File #	OPR 2026-0929		
Cross Ref #			
Project #			
Submitting Dept	WASTEWATER MANAGEMENT	**Bid #**	RFQU 6460-25
Contact Name/Phone	KYLE 4647	**Requisition #**	CR29080
Contact E-Mail	KARRINGTON@SPOKANECITY.ORG		
Agenda Item Type	Contract Item		
Council Sponsor(s)	KKLITZKE		
Sponsoring at Administrators Request	NO		
Lease? NO	**Grant Related?** NO	**Public Works?** YES	
Agenda Item Name	4320 RIVERSIDE PARK WATER RECLAMATION-CONTRACT-SILO DIGESTER MIX		

Agenda Wording

Consent to contract with Jacobs Engineering for the Silo Digester No. 3 Mixing and Heating System Design and Specification Project for Riverside Park Water Reclamation Facility. Term of contract begins on November 1, 2026 and ends on December 31, 2031.

Summary (Background)

Silo Digester No.3 Mixing and Heating System Design and Specifications Project. The Scope of Services for this contract includes design services, bid phase services and services during construction. Process Engineering, Structural Engineering, Electrical Engineering, and SCADA as these services pertain to the addition of future heating and mixing to Silo Digester No. 3. Building Mechanical (HVAC) and Plumbing engineering, and architectural design services are anticipated to be minor adjustments to existing systems to accommodate the mixing system.

What impacts would the proposal have on historically excluded communities?

N/A - Public Works services and projects are designed to serve all citizens and businesses. We strive to offer a consistent level of service to all, to distribute public investment throughout the community, and to respond to gaps in services identified in various City plans. We recognize the need to maintain affordability and predictability for utility customers. And we are committed to delivering work that is both financially and environmentally responsible. This item supports the operations of Public Works.

How will data be collected, analyzed, and reported concerning the effect of the program/policy by racial, ethnic, gender identity, national origin, income level, disability, sexual orientation, or other existing disparities?

N/A - This work is designed to manage costs and continue service delivery in support of all citizens and taxpayers and maintain compliance with regulatory requirements.

How will data be collected regarding the effectiveness of this program, policy, or product to ensure it is the right solution?

N/A - Public Works follows the City's established procurement and public works bidding regulations and policies to bring items forward, and then uses contract management best practices to ensure desired outcomes and regulatory compliance.

Describe how this proposal aligns with current City Policies, including the Comprehensive Plan, Sustainability Action Plan, Capital Improvement Program, Neighborhood Master Plans, Council Resolutions, and others?

This work is consistent with all City Policies and Procedures and is required to maintain compliance with regulatory requirements.

Council Subcommittee Review

PIES 11/10

Fiscal Impact

Approved in Current Year Budget?	
Total Cost	$ 1,738,888.00
Current Year Cost	$ 1,738,888.00
Subsequent Year(s) Cost	$ 0

Narrative

This was planned in the CiP

Amount		Budget Account
Expense	$ 1,738,888.00	# 4320.43290.94350.56501.10104
Select	$	#
Select	$	#
Select	$	#
Select	$	#
Select	$	#

Funding Source	One-Time
Funding Source Type	Program Revenue

Is this funding source sustainable for future years, months, etc?

Yes

Expense Occurrence	One-Time

Other budget impacts (revenue generating, match requirements, etc.)

Approvals		Additional Approvals	
Dept Head	GENNETT, RAYLENE	**PURCHASING**	PRINCE, THEA
Division Director	AVERYT, CHRIS		
Accounting Manager	ALBIN-MOORE, ANGELA		
Legal	FAIRBORN, KATHERINE		
For the Mayor	PICCOLO, MIKE		

Distribution List

Greta Gilman: Greta.Gilman@jacobs.com	hbarnhart@spokanecity.org
kkeck@spokanecity.org	rpwrfaccounting@spokanecity.org
Tax & Licenses	tlester@spokanecity.org

City Clerk's OPR 2026-0929

City of Spokane

CONSULTANT AGREEMENT

Title: SILO DIGESTER NO. 3 MIXING AND HEATING SYSTEM DESIGN AND SPECIFICATIONS

THIS CONSULTANT AGREEMENT is made and entered into by and between the **CITY OF SPOKANE**, a Washington municipal corporation ("City"), and **JACOBS ENGINEERING GROUP INC.**, whose corporate address is 1999 Bryan Street Suite 3500, Dallas, Texas 75201 and local address is 999 West Riverside Avenue, Suite 500, Spokane, Washington 99201 ("Consultant"), individually hereafter referenced as a "Party," and together as the "Parties."

WHEREAS, the purpose of this Agreement is for the Consultant to provide Silo Digester No. 3 Mixing and Heating System – Design and Specifications for the Riverside Park Water Reclamation Facility, in accordance with RFQu #6460-25; and

WHEREAS, the Consultant was selected from RFQu #6460-25.

NOW, THEREFORE, in consideration of the terms, conditions, covenants and performance of the Scope of Work contained herein, the Parties mutually agree as follows:

1. TERM OF AGREEMENT.
The term of this Agreement begins on November 1, 2026, and ends on December 31, 2031, unless amended by written agreement or terminated earlier under the provisions.

2. TIME OF BEGINNING AND COMPLETION.
The Consultant shall begin the work outlined in Section 3 herein, the "Scope of Work" ("Work"), on the beginning date, above. The City will acknowledge in writing when the Work is complete. Time limits established under this Agreement shall not be extended because of delays for which the Consultant is responsible, but may be extended by the City, in writing, for the City's convenience or conditions beyond the Consultant's control.

Any delays in or failure of performance by the parties, other than the payment of money, shall not constitute default hereunder if and to the extent such delays or failures of performance are caused by occurrences beyond the reasonable control of the parties, as the case may be, including but not limited to, acts of God or the public enemy; epidemic; pandemic; compliance with any order or request of any governmental authority; fires, floods, explosion, accidents; riots, strikes or other concerted acts of workmen, whether direct or indirect; or any causes, whether or not of the same class or kind as those specifically named above, which are not within the reasonable control of the parties respectively. In the event that any event of force majeure as herein defined occurs,

Consultant shall be entitled to a reasonable extension of time for performance of its Services under this Agreement.

3. SCOPE OF WORK.
The Work for this Agreement is described in an excerpt and revision to Section 2, Technical Proposal of the Consultant's RFQu No. 6460-25 response dated November 3, 2025, attached as Exhibit B. The Work will be further defined, and a detailed *Scope of Work* will be issued as an Amendment to this Agreement prior to the City issuing a Notice to Proceed (NTP).

In the event of a conflict or discrepancy in the RFQu or Exhibit C, this Agreement, supplemented by a future mutually agreed to Detailed Scope of Services, controls. The order of precedence is as follows: 1) Agreement and its associated Amendments – including future Detailed Scope of Services, (2) Exhibit C, (3) RFQu.

The Work is subject to City review and approval. The Consultant shall confer with the City periodically and prepare and present information and materials (*e.g.* detailed outline of completed Work) requested by the City to determine the adequacy of the Work or Consultant's progress.

4. COMPENSATION.
Total compensation for Consultant's services under this Agreement shall not exceed **ONE MILLION SEVEN HUNDRED THIRTY-EIGHT THOUSAND EIGHT HUNDRED EIGHTY-EIGHT AND NO/100 DOLLARS ($1,738,888.00)**, plus sales tax if applicable, unless modified by a written amendment to this Agreement. This is the maximum amount to be paid under this Agreement for the Work described in Section 3 above, and shall not be exceeded without the prior written authorization of the City in the form of an executed amendment to this Agreement.

5. PAYMENT.
The Consultant shall submit its applications for payment to Riverside Park Water Reclamation Facility, via email to: hbarnhart@spokanecity.org Attn: Heather Barnhart. **Payment will be made via direct deposit/ACH** within thirty (30) days after receipt of the Consultant's application except as provided by state law. If the City objects to all or any portion of the invoice, it shall notify the Consultant and pay that portion of the invoice not in dispute. In that event, the parties shall immediately make every effort to settle the disputed amount. For the avoidance of doubt, in no event shall City fail to make payment on any portion of an invoice which is not in dispute. Only the disputed portion of the invoice may be held in abeyance until resolved between the parties. The parties shall diligently communicate to resolve any disputed portion of an invoice within ten (10) days of notice to Consultant. If Consultant has not received payment within sixty (60) days after it has submitted its invoice, Consultant shall provide ten (10) days written notice of intent to cease performing Services. Consultant will resume its Services when payments have been made current and Consultant's schedule has been adjusted, by amendment, for the time lost due to the suspension.

6. REIMBURSABLES
The reimbursables under this Agreement are to be included and considered part of the maximum amount not to exceed (above), and require the Consultant's submittal of appropriate documentation and actual itemized receipts, the following limitations apply.

A. City will reimburse the Consultant at actual cost for expenditures that are pre-approved by the City in writing and are necessary and directly applicable to the work required by this Agreement provided that similar direct project costs related to the contracts of other clients are consistently accounted for in a like manner. Such direct project costs may not be charged as part of overhead expenses or include a markup. Other direct charges may

include, but are not limited to the following types of items: travel, printing, cell phone, supplies, materials, computer charges, and fees of subconsultants.

B. The billing for third party direct expenses specifically identifiable with this project shall be an itemized listing of the charges supported by copies of the original bills, invoices, expense accounts, subconsultant paid invoices, and other supporting documents used by the Consultant to generate invoice(s) to the City. The original supporting documents shall be available to the City for inspection upon request. All charges must be necessary for the services provided under this Contract.

C. The City will reimburse the actual cost for travel expenses incurred as evidenced by copies of receipts (excluding meals) supporting such travel expenses, and in accordance with the City of Spokane Travel Policy, details of which can be provided upon request.

D. **Airfare**: Airfare will be reimbursed at the actual cost of the airline ticket. The City will reimburse for Economy or Coach Fare only. Receipts detailing each airfare are required.

E. **Meals:** Meals will be reimbursed at the Federal Per Diem daily meal rate for the city in which the work is performed. *Receipts <u>are not</u> required as documentation.* The invoice shall state "the meals are being billed at the Federal Per Diem daily meal rate", and shall detail how many of each meal is being billed (e.g. the number of breakfasts, lunches, and dinners). The City will not reimburse for alcohol at any time.

F. **Lodging:** Lodging will be reimbursed at actual cost incurred up to a maximum of the published General Services Administration (GSA) Index for the city in which the work is performed (*the current maximum allowed reimbursement amount can be provided upon request*). Receipts detailing each day / night lodging are required. The City will not reimburse for ancillary expenses charged to the room (e.g. movies, laundry, mini bar, refreshment center, fitness center, sundry items, etc.)

G. **Vehicle Mileage**: Vehicle mileage will be reimbursed at the Federal Internal Revenue Service Standard Business Mileage Rate in affect at the time the mileage expense is incurred. Please note: payment for mileage for long distances traveled will not be more than an equivalent trip round-trip airfare of a common carrier for a coach or economy class ticket.

H. **Rental Car:** Rental car expenses will be reimbursed at the actual cost of the rental. Rental car receipts are required for all rental car expenses. The City will reimburse for a standard car of a mid-size class or less. The City will not reimburse for ancillary expenses charged to the car rental (e.g. GPS unit).

I. **Miscellaneous Travel** (e.g. parking, rental car gas, taxi, shuttle, toll fees, ferry fees, etc.): Miscellaneous travel expenses will be reimbursed at the actual cost incurred. Receipts are required for each expense of $10.00 or more.

J. **Miscellaneous Other Business Expenses** (e.g. printing, photo development, binding): Other miscellaneous business expenses will be reimbursed at the actual cost incurred and may not include a markup. Receipts are required for all miscellaneous expenses that are billed.

K. **Subconsultant**: Subconsultant expenses will be reimbursed at the actual cost incurred and a four percent (4%) markup. Copies of all Subconsultant invoices that are rebilled to the City are required.

7. TAXES, FEES AND LICENSES.

A. Consultant shall pay and maintain in current status, all necessary licenses, fees, assessments, permit charges, etc. necessary to conduct the work included under this Agreement. It is the Consultant's sole responsibility to monitor and determine changes or the enactment of any subsequent requirements for said fees, assessments, or changes and to immediately comply.

B. Where required by state statute, ordinance or regulation, Consultant shall pay and

maintain in current status all taxes necessary for performance. Consultant shall not charge the City for federal excise taxes. The City will furnish Consultant an exemption certificate where appropriate.

C. The Director of Finance and Administrative Services may withhold payment pending satisfactory resolution of unpaid taxes and fees due the City.
D. The cost of any permits, licenses, fees, etc. arising as a result of the projects included in this Agreement shall be included in the project budgets.

8. CITY OF SPOKANE BUSINESS LICENSE.

Section 8.01.070 of the Spokane Municipal Code states that no person may engage in business with the City without first having obtained a valid annual business registration. The Consultant shall be responsible for contacting the State of Washington Business License Services at www.dor.wa.gov or 360-705-6741 to obtain a business registration. If the Consultant does not believe it is required to obtain a business registration, it may contact the City's Taxes and Licenses Division at (509) 625- 6070 to request an exemption status determination.

9. SOCIAL EQUITY REQUIREMENTS.

No individual shall be excluded from participation in, denied the benefit of, subjected to discrimination under, or denied employment in the administration of or in connection with this Agreement because of age, sex, race, color, religion, creed, marital status, familial status, sexual orientation including gender expression or gender identity, national origin, honorably discharged veteran or military status, the presence of any sensory, mental or physical disability, or use of a service animal by a person with disabilities. Consultant agrees to comply with, and to require that all subcontractors comply with, Section 504 of the Rehabilitation Act of 1973 and the Americans with Disabilities Act, as applicable to the Consultant. Consultant shall seek inclusion of woman and minority business for subcontracting. A woman or minority business is one that self-identifies to be at least 51% owned by a woman and/or minority. Such firms do not have to be certified by the State of Washington.

10. INDEMNIFICATION.

To the fullest extent permitted by law, the Consultant shall indemnify, and hold the City and its officers and employees harmless from all claims, demands, or suits at law or equity asserted by third parties for bodily injury (including death) and/or tangible property damage to the proportionate extent caused by the Consultant's negligence or willful misconduct under this Agreement, including reasonable attorneys' fees and litigation costs; provided that nothing herein shall require a Consultant to indemnify the City against and hold harmless the City from claims, demands or suits based solely upon the negligence of the City, its agents, officers, and employees. If a claim or suit is caused by or results from the concurrent negligence of the Consultant's agents or employees and the City, its agents, officers and employees, this indemnity provision shall be valid and enforceable to the extent of the negligence of the Consultant, its agents or employees. The Consultant specifically assumes liability and agrees to indemnify and hold the City harmless for actions brought by the Consultant's own employees against the City and, solely for the purpose of this indemnification, the Consultant specifically waives any immunity under the Washington State industrial insurance law, or Title 51 RCW. The Consultant recognizes that this waiver was specifically entered into pursuant to the provisions of RCW 4.24.115 and was the subject of mutual negotiation. The indemnity and agreement to defend and hold the City harmless provided for in this section shall survive any termination or expiration of this Agreement. Notwithstanding any provision in this Agreement, in no event shall either party be liable to the other party for any indirect damages in connection with this Agreement.

11. INSURANCE.
During the period of the Agreement, the Consultant shall maintain in force at its own expense, each insurance noted below with companies or through sources approved by the State Insurance Commissioner pursuant to RCW Title 48;

A. **Worker's Compensation Insurance** in compliance with RCW 51.12.020, which requires subject employers to provide workers' compensation coverage for all their subject workers and Employer's Liability Insurance in the amount of $1,000,000;

B. **General Liability Insurance** on an occurrence basis, with a limit of $1,000,000 each occurrence and general aggregate for bodily injury and property damage. It shall include contractual liability coverage for the indemnity provided under this agreement. It shall provide that the City, its officers and employees are additional insureds but only with respect to the Consultant's negligent services to be provided under this Agreement; and

   i. Acceptable supplementary Umbrella coverage in combination with Commercial General Liability policy shall be a of $2M per occurrence and in the aggregate in order to meet the insurance coverages required under this contract;

C. **Automobile Liability Insuranc**e with a combined single limit, of $1,000,000 each accident for bodily injury and property damage, including coverage for owned, hired and non-owned vehicles.

D. **Professional Liability Insurance** with a limit of $1,000,000 each claim and in the aggregate. This is to cover damages caused by the negligent error, omission, or negligent acts related to the professional services to be provided under this Agreement. The coverage must remain in effect for at least two (2) years after the Agreement is completed.

There shall be no cancellation, material change in coverage that would cause non-compliance with the requirements herein, reduction of limits or intent not to renew the insurance coverage(s) without thirty (30) days written notice from the Consultant or its insurer(s) to the City. As evidence of the insurance coverage(s) required by this Agreement, the Consultant shall furnish acceptable Certificates Of Insurance (COI) that meet the insurance requirements herein to the City within ten (10) days of returning the signed Agreement, providing a sample COI before agreement is scheduled for consideration on City Council agenda. The sample COI will state, “SAMPLE” on document. The certificate shall specify the City of Spokane as “Additional Insured” on the General Liability and Automobile Liability insurance policies specifically for Consultant’s services under this Agreement, and include the required endorsements, the thirty (30) day cancellation clause, and the deduction or retention level. The Consultant shall be financially responsible for all pertinent deductibles, self-insured retentions, and/or self-insurance for their insurance policies.

12. DEBARMENT AND SUSPENSION.
The Consultant has provided its certification that it is in compliance with and shall not contract with individuals or organizations which are debarred, suspended, or otherwise excluded from or ineligible from participation in Federal Assistance Programs under Executive Order 12549 and “Debarment and Suspension”, codified at 29 CFR part 98.

13. AUDIT.
Upon request, the Consultant shall permit the City and any other governmental agency (“Agency”) involved in the funding of the Work to inspect and audit all pertinent books and records. This includes work of the Consultant, any subconsultant, or any other person or entity that performed

connected or related Work. Such books and records shall be made available upon reasonable notice of a request by the City, including up to three (3) years after final payment or release of withheld amounts. Such inspection and audit shall occur in Spokane County, Washington, or other reasonable locations mutually agreed to by the parties. The Consultant shall permit the City to copy such books and records at its own expense. The Consultant shall ensure that inspection, audit and copying rights of the City is a condition of any subcontract, agreement or other arrangement under which any other persons or entity may perform Work under this Agreement. City's audit rights shall not apply to any examination of Consultant's fixed rates or percentage multipliers.

14. INDEPENDENT CONSULTANT.

A. The Consultant is an independent Consultant not a fiduciary. This Agreement does not intend the Consultant to act as a City employee. The City has neither direct nor immediate control over the Consultant nor the right to control the manner or means by which the Consultant works. Neither the Consultant nor any Consultant employee shall be an employee of the City. This Agreement prohibits the Consultant to act as an agent or legal representative of the City. The Consultant is not granted express or implied rights or authority to assume or create any obligation or responsibility for or in the name of the City, or to bind the City. The City is not liable for or obligated to pay sick leave, vacation pay, or any other benefit of employment, nor to pay social security or other tax that may arise from employment. The Consultant shall pay all income and other taxes as due. The Consultant may perform work for other parties; the City is not the exclusive user of the services that the Consultant provides.

B. If the City needs the Consultant to Work on City premises and/or with City equipment, the City may provide the necessary premises and equipment. Such premises and equipment are exclusively for the Work and not to be used for any other purpose.

C. If the Consultant works on the City premises using City equipment, the Consultant remains an independent Consultant and not a City employee. The Consultant will notify the City Project Manager if s/he or any other subconsultants are within ninety (90) days of a consecutive 36-month placement on City property. If the City determines using City premises or equipment is unnecessary to complete the Work, the Consultant will be required to work from its own office space or in the field. The City may negotiate a reduction in Consultant fees or charge a rental fee based on the actual costs to the City, for City premises or equipment.

15. KEY PERSONS.

The Consultant's Project Manager, Project Principal, and Quality Manager are considered essential to the Work. The Consultant shall not transfer or reassign any individual designated in this Agreement as essential to the Work, nor shall those key persons be replaced, removed or withdrawn from the Work without the express written consent of the City, which shall not be unreasonably withheld. If any such individual leaves the Consultant's employment, the Consultant shall present to the City one or more individuals with greater or equal qualifications as a replacement, subject to the City's approval, which shall not be unreasonably withheld. The City's approval does not release the Consultant from its obligations under this Agreement.

16. ASSIGNMENT AND SUBCONTRACTING.

The Consultant shall not assign or subcontract its obligations under this Agreement without the City's written consent, which may be granted or withheld in the City's sole discretion. Any subcontract made by the Consultant shall incorporate by reference this Agreement, except as otherwise provided. The Consultant shall require that all subconsultants comply with the obligations and requirements of the subcontract. The City's consent to any assignment or

subcontract does not release the consultant from liability or any obligation within this Agreement, whether before or after City consent, assignment or subcontract. Consultant reserves the right to make any internal corporate assignments to allow Services to be performed by utilizing an affiliate, subsidiary or related company of Consultant that is appropriately licensed to perform the Services.

17. CITY ETHICS CODE.

A. Consultant shall promptly notify the City in writing of any person expected to be a Consultant Worker (including any Consultant employee, principal, or owner) was a former City officer or employee within the past twelve (12) months.
B. Consultant shall ensure compliance with the City Ethics Code by any Consultant Worker when the Work or matter related to the Work is performed by a Consultant Worker who has been a City officer or employee within the past two (2) years.
C. Consultant shall not directly or indirectly offer anything of value (such as retainers, loans, entertainment, favors, gifts, tickets, trips, favors, bonuses, donations, special discounts, services/deliverables or meals) to any City employee, volunteer or official that is intended, or may appear to a reasonable person to be intended, to obtain or give special consideration to the Consultant. Promotional items worth less than $25 may be distributed by the Consultant to a City employee if the Consultant uses the items as routine and standard promotional materials. Any violation of this provision may cause termination of this Agreement. Nothing in this Agreement prohibits donations to campaigns for election to City office, so long as the donation is disclosed as required by the election campaign disclosure laws of the City and of the State.

18. NO CONFLICT OF INTEREST.

Consultant confirms that the Consultant or workers have no business interest or a close family relationship with any City officer or employee who was or will be involved in the consultant selection, negotiation, drafting, signing, administration or evaluation of the Consultant's work. As used in this Section, the term Consultant includes any worker of the Consultant who was, is, or will be, involved in negotiation, drafting, signing, administration or performance of the Agreement. The term "close family relationship" refers to: spouse or domestic partner, any dependent parent, parent-in-law, child, son-in-law, daughter-in-law; or any parent, parent in-law, sibling, uncle, aunt, cousin, niece or nephew residing in the household of a City officer or employee described above.

19. ERRORS AND OMISSIONS, CORRECTIONS.

Consultant is responsible for professional quality, technical accuracy, and the coordination of all designs, drawings, specifications, and other services furnished by or on the behalf of the Consultant under this Agreement in the delivery of a final work product. The standard of care applicable to Consultant's services will be the degree of skill and diligence normally employed by professional engineers or Consultants practicing under similar circumstances, in the same location services are performed. The Final Work Product is defined as a stamped, signed work product. Following completion of Services and for a period of twelve (12) months thereafter, if the Services provided hereunder do not conform to the foregoing standard and the same is reported to Consultant by City in writing promptly after recognition thereof, Consultant shall, without additional compensation, correct or revise errors or mistakes in designs, drawings, specifications, and/or other consultant services as soon as reasonably possible after receipt of such report from City. Consultant's guaranties shall not apply when the defect is due to: ordinary wear and tear, misoperation, corrosion or erosion, noise levels, operating conditions more severe than those contemplated in the original design, or a defect in a process or mechanical design or equipment furnished or specified by others. IMPLIED WARRANTIES OF MERCHANTABILITY AND FITNESS FOR A PARTICULAR PURPOSE ARE SPECIFICALLY EXCLUDED. For any deficiencies in the Services, City shall be restricted to the remedies expressly set forth in this

Section, whether asserted on the basis of contract, tort (including negligence) or otherwise. The obligation provided for in this Section regarding acts or omissions resulting from this Agreement survives Agreement termination or expiration.

20. INTELLECTUAL PROPERTY RIGHTS.

A. **Pre-Existing Materials**. During the course of performing its services Consultant may provide or otherwise make available to City its proprietary data, concepts, methods, techniques, processes, protocols, ideas, inventions, know-how, trade secrets, algorithm, software, works of authorship, software and hardware architecture, databases, tools, other background technologies and standards of judgment that Consultant developed or licensed from third parties independent of the services and prior to the Effective Date ("Pre-Existing Jacobs Material"). Consultant shall retain all right, title and interest, including intellectual property rights, in the Pre-Existing Jacobs Material. Subject to the terms and conditions of this Agreement, Consultant hereby grants to City a non-exclusive, non-transferable, royalty-free license to utilize the Pre-Existing Jacobs Material solely for the purpose of City's project.

B. **Copyrights**. The Consultant shall retain the copyright (including the right of reuse) to all materials and documents prepared by the Consultant for the Work, whether or not the Work is completed. The Consultant grants to the City a non-exclusive, irrevocable, unlimited, royalty-free license to use copy and distribute every document and all the materials prepared by the Consultant for the City under this Agreement. If requested by the City, a copy of all drawings, prints, plans, field notes, reports, documents, files, input materials, output materials, the media upon which they are located (including cards, tapes, discs, and other storage facilities), software program or packages (including source code or codes, object codes, upgrades, revisions, modifications, and any related materials) and/or any other related documents or materials developed solely for and paid for by the City to perform the Work, shall be promptly delivered to the City.

C. **Patents**. The Consultant assigns to the City all rights in any invention, improvement, or discovery, with all related information, including but not limited to designs, specifications, data, patent rights and findings developed with the performance of the Agreement or any subcontract. Notwithstanding the above, the Consultant does not convey to the City, nor does the City obtain, any right to any document or material utilized by the Consultant created or produced separate from the Agreement or was pre-existing material (not already owned by the City), provided that the Consultant has identified in writing such material as pre-existing prior to commencement of the Work. If pre-existing materials are incorporated in the work, the Consultant grants the City an irrevocable, non-exclusive right and/or license to use, execute, reproduce, display and transfer the pre-existing material, but only as an inseparable part of the work.

D. **Documents**. The City may make and retain copies of such documents for its information and reference with their use on the project. The Consultant does not represent or warrant that such documents are suitable for reuse by the City or others, on extensions of the project or on any other project, and the City releases the Consultant from liability for any unauthorized reuse of such documents. City shall indemnify and hold harmless Consultant and its officers, directors, members, partners, agents, employees, and consultants from all claims, damages, losses, and expenses, including reasonable attorneys' fees, arising out of or resulting from any use, reuse, or modification of the design documents without written verification, completion, or adaptation by Consultant;

21. CONFIDENTIALITY.
Notwithstanding anything to the contrary, City will maintain the confidentiality of Consultant's materials and information only to the extent that is legally allowed in the State of Washington. City is bound by the State Public Records Act, RCW Ch. 42.56. That law presumptively makes all records in the possession of the City public records which are freely available upon request by anyone. In the event that City gets a valid public records request for Consultant's materials or information and the City determines there are exemptions only the Consultant can assert, City will endeavor to give Consultant notice. Consultant will be required to go to Court to get an injunction preventing the release of the requested records. In the event that Consultant does not get a timely injunction preventing the release of the records, the City will comply with the Public Records Act and release the records.

22. DISPUTES.
Any dispute or misunderstanding that may arise under this Agreement, concerning the Consultant's performance, shall first be through negotiations, if possible, between the Consultant's Project Manager and the City's Project Manager. It shall be referred to the Director and the Consultant's senior executive(s). If such officials do not agree upon a decision within a reasonable period of time, either party may decline or discontinue such discussions and may then pursue the legal means to resolve such disputes, including but not limited to mediation, arbitration and/or alternative dispute resolution processes. Nothing in this dispute process shall mitigate the rights of the City to terminate the Agreement. Notwithstanding all of the above, if the City believes in good faith that some portion of the Work has not been completed in compliance with the standard of care, the City may require the Consultant to correct such work prior to the City payment. The City will provide to the Consultant an explanation of the concern and the remedy that the City expects. The City may withhold from any payment otherwise due, an amount that the City in good faith finds to be under dispute, or if the Consultant provides no sufficient remedy, the City may retain the amount equal to the cost to the City for otherwise correcting or remedying the work not properly completed. Waiver of any of these rights is not deemed a future waiver of any such right or remedy available at law, contract or equity.

23. TERMINATION.
A. **For Cause**. The City or Consultant may terminate the Agreement if the other party is in material breach of this Agreement, and such breach has not been corrected to the other party's reasonable satisfaction in a timely manner. Notice of termination under this Section shall be given by the party terminating this Agreement to the other, not fewer than thirty (30) business days prior to the effective date of termination.
B. **For Reasons Beyond Control of Parties** Either party may terminate this Agreement without recourse by the other where performance is rendered impossible or impracticable for reasons beyond such party's reasonable control, such as, but not limited to, an act of nature, war or warlike operation, civil commotion, riot, labor dispute including strike, walkout or lockout, except labor disputes involving the Consultant's own employees, sabotage, or superior governmental regulation or control. Notice of termination under this Section shall be given by the party terminating this Agreement to the other, not fewer than thirty (30) business days prior to the effective date of termination.
C. **For Convenience**. Either party may terminate this Agreement without cause, upon thirty (30) days written notice to the other party.
D. Actions upon Termination. If termination occurs and is not the fault of the Consultant, the Consultant shall be paid for the services properly performed prior to the actual termination date, with any reimbursable expenses then due, but such compensation shall not exceed the maximum compensation to be paid under the Agreement. The Consultant agrees this

payment shall fully and adequately compensate the Consultant and all subconsultants for all profits, costs, expenses, losses, liabilities, damages, taxes and charges of any kind (whether foreseen or unforeseen) attributable to the termination of this Agreement.

E. Upon termination, the Consultant shall provide the City with the most current design documents, contract documents, writings and other products the Consultant has produced to termination, along with copies of all project-related correspondence and similar items. The City shall have the same rights to use these materials as if termination had not occurred; provided however, that the City shall indemnify and hold the Consultant harmless from any claims, losses, or damages to the extent caused by modifications made by the City to the Consultant's work product.
F. If the City terminates this Agreement for cause, and it is later determined that the termination for cause was wrongful, the termination shall automatically be converted to and treated as a termination for convenience

24. EXPANSION FOR NEW WORK.

This Agreement scope may be expanded for new work. Any expansion for work not specified within the original Scope of Services, and/or not specified in the original RFP as intended work for the Agreement ("New Work" must comply with all the following limitations and requirements: (a) the New Work is not reasonable to solicit separately; (b) the New Work is for reasonable purpose; (c) the New Work was not reasonably known to either the City or Consultant at time of contract or else was mentioned as a possibility in the solicitation (such as future phases of work, or a change in law); (d) the New Work is not significant enough to be reasonably regarded as an independent body of work; (e) the New Work would not have attracted a different field of competition; and (f) the change does not vary the essential identified or main purposes of the Agreement. The City may make exceptions for immaterial changes, emergency or sole source conditions, or other situations required in City opinion. Certain changes are not New Work subject to these limitations, such as additional phases of Work anticipated at the time of solicitation, time extensions, and similar. New Work must be mutually agreed and issued by the City through written Amendment. New Work performed before an authorizing Amendment may not be eligible for payment. For the avoidance of doubt, Consultant shall not begin performing any Services until documented by an executed authorizing Amendment.

Further, the process for such change management shall be as follows. City may, at any time, request changes in the scope of Services for the project. In the event City notifies Consultant of its desire to make a change in the Scope of Services, or the time of performance, Consultant shall, within ten (10) days after receiving such written notice, give City notification of any potential change in the time of performance or cost of performance for the project. Equitable adjustments to time of performance or cost of performance resulting from Scope of Services changes shall be negotiated and upon mutual agreement by the parties, the Agreement shall be modified by a written instrument, signed by both parties, to reflect the changes in such Scope of Services, time of performance and cost of performance. For the avoidance of doubt, if City elects to changes the Scope of Services, Consultant may not begin performing such extra services until such time as a written instrument has been signed by both parties.

25. MISCELLANEOUS PROVISIONS.

A. **Amendments**. No modification of this Agreement shall be effective unless in writing and signed by an authorized representative of each of the parties hereto.
B. Binding Agreement: This Agreement shall not be binding until signed by both parties. The provisions, covenants and conditions in this Agreement shall bind the parties, their legal heirs, representatives, successors and assigns.
C. **Americans with Disabilities Act (ADA)**. Specific attention by the designer is required in

association with the Americans with Disabilities Act (ADA) 42 U.S.C. 12101-12213 and 47 U.S.C. 225 and 611, its requirements, regulations, standards and guidelines, which were updated in 2010 and are effective and mandatory for all State and local government facilities and places of public accommodation for construction projects including alteration of existing facilities, as of March 15, 2012. The City advises that the requirements for accessibility under the ADA, may contain provisions that differ substantively from accessibility provisions in applicable State and City codes, and if the provisions of the ADA impose a greater or equal protection for the rights of individuals with disabilities or individuals associated with them than the adopted local codes, the ADA prevail unless approval for an exception is obtained by a formal documented process. Where local codes provide exceptions from accessibility requirements that differ from the ADA Standards; such exceptions may not be permitted for publicly owned facilities subject to Title II requirements unless the same exception exists in the Title II regulations. It is the responsibility of the designer to determine the code provisions.

D. The Consultant, at no expense to the City, shall comply with all laws of the United States and Washington, the Charter and ordinances of the City of Spokane; and rules, regulations, orders and directives of their administrative agencies and officers. Without limiting the generality of this paragraph, the Consultant shall comply with the requirements of this Section.
E. **Venue**. This Agreement shall be construed and interpreted under the laws of Washington. The venue of any action brought shall be in the Superior Court of Spokane County. Each party waives its right to jury trial.
F. **Remedies Cumulative**. Rights under this Agreement are cumulative and nonexclusive of any other remedy of law or in equity.
G. **Captions**. The titles of sections or subsections are for convenience only and do not define or limit the contents.
H. **Severability**. If any term or provision is determined by a court of competent jurisdiction to be invalid or unenforceable, the remainder of this Agreement shall not be affected, and each term and provision shall be valid and enforceable to the fullest extent permitted by law.
I. **Waiver**. No covenant, term or condition or the breach shall be deemed waived, except by written consent of the party against whom the waiver is claimed, and any waiver of the breach of any covenant, term or condition shall not be deemed a waiver of any preceding or succeeding breach of the same or any other covenant, term of condition. Neither the acceptance by the City of any performance by the Consultant after the time the same shall have become due nor payment to the Consultant for any portion of the Work shall constitute a waiver by the City of the breach or default of any covenant, term or condition unless otherwise expressly agreed to by the City in writing.
J. **Entire Agreement**. This document along with any exhibits and all attachments, and subsequently issued addenda, comprises the entire agreement between the City and the Consultant. If conflict occurs between this Agreement and applicable laws, codes, ordinances or regulations, the most stringent or legally binding requirement shall govern and be considered a part of this Agreement to afford the City the maximum benefits.
K. **Negotiated Agreement**. The parties acknowledge this is a negotiated agreement, that they have had this Agreement reviewed by their respective legal counsel, and that the terms and conditions of this Agreement are not to be construed against any party on the basis of such party's draftsmanship.
L. **No Personal Liability**. No officer, agent or authorized employee of either party shall be personally responsible for any liability arising under this Agreement, whether expressed or implied, nor for any statement or representation made or in any connection with this Agreement.

M. **Notices**. All notices to be given under this Agreement shall be (i) in writing, (ii) personally delivered or mailed, by prepaid, certified mail or overnight courier, (iii) addressed to the party to whom such notice or communication is directed, and at the addresses set forth in the first paragraph. Either party may, by written notice to the other, change the representative or the address to which such notices are to be sent.

Any such notice or communication shall be deemed to have been given on (i) the day such notice or communication is personally delivered, (ii) three (3) days after such notice or communication is mailed by prepaid certified or registered mail, or (iii) one (1) working day after such notice or communication is sent by overnight courier.

IN WITNESS WHEREOF, in consideration of the terms, conditions and covenants contained, or attached and incorporated and made a part, the parties have executed this Agreement by having legally-binding representatives affix their signatures below.

JACOBS ENGINEERING GROUP INC.	**CITY OF SPOKANE**
By_____	By_____
Signature Date	Signature Date
_____	_____
Type or Print Name	Type or Print Name
_____	_____
Title	Title
Attest:	Approved as to form:
_____	_____
City Clerk	Assistant City Attorney

Attachments:

Exhibit A – Certificate Regarding Debarment
Exhibit B – Consultant's Proposal dated November 3, 2025
Exhibit C – City of Spokane Riverside Park Water Reclamation Facility Silo Digester No. 3 Mixing and Hearing System Design and Specifications

26-278b

EXHIBIT A

CERTIFICATION REGARDING DEBARMENT, SUSPENSION, INELIGIBILITY AND VOLUNTARY EXCLUSION

1. The undersigned (i.e., signatory for the Subrecipient / Contractor / Consultant) certifies, to the best of its knowledge and belief, that it and its principals:

   a. Are not presently debarred, suspended, proposed for debarment, declared ineligible, or voluntarily excluded from covered transactions by any federal department or agency;
   b. Have not within a three-year period preceding this contract been convicted or had a civil judgment rendered against them for commission of fraud or a criminal offense in connection with obtaining, attempting to obtain, or performing a public (federal, state, or local) transaction or contract under a public transaction; violation of federal or state antitrust statutes or commission of embezzlement, theft, forgery, bribery, falsification or destruction of records, making false statements, tax evasion, receiving stolen property, making false claims, or obstruction of justice;
   c. Are not presently indicted or otherwise criminally or civilly charged by a government entity (federal, state, or local) with commission of any of the offenses enumerated in paragraph (1)(b) of this certification; and,
   d. Have not within a three-year period preceding this contract had one or more public transactions (federal, state, or local) terminated for cause or default.

2. The undersigned agrees by signing this contract that it shall not knowingly enter into any lower tier covered transaction with a person who is debarred, suspended, declared ineligible, or voluntarily excluded from participation in this covered transaction.

3. The undersigned further agrees by signing this contract that it will include the following clause, without modification, in all lower tier covered transactions and in all solicitations for lower tier covered transactions:

   Certification Regarding Debarment, Suspension, Ineligibility and Voluntary Exclusion – Lower Tier Covered Transactions

   1. The lower tier contractor certified, by signing this contract that neither it nor its principals is presently debarred, suspended, proposed for debarment, declared ineligible, or voluntarily excluded from participation in this transaction by any federal department or agency.

   2. Where the lower tier contractor is unable to certify to any of the statements in this contract, such contractor shall attach an explanation to this contract.

4. I understand that a false statement of this certification may be grounds for termination of the contract.

_____ Name of Subrecipient / Contractor / Consultant (Type or Print)	_____ Program Title (Type or Print)
_____ Name of Certifying Official (Type or Print) _____ Title of Certifying Official (Type or Print)	_____ Signature _____ Date (Type or Print)

EXHIBIT B

EXHIBIT C

EXHIBIT C

CITY OF SPOKANE
RIVERSIDE PARK WATER RECLAMATION FACILITY
SILO DIGESTER NO.3 MIXING AND HEATING SYSTEM DESIGN AND SPECIFICATIONS

BACKGROUND:

The City of Spokane (City) Riverside Park Water Reclamation Facility (RPWRF) Silo Digester No. 3 Mixing and Heating System Design and Specifications contract has been awarded to Jacobs Engineering Group, Inc. (Jacobs). Jacobs won this contract through a competitive process as advertised in Request for Qualification (RFQu) #6460-25. The City and Jacobs are subsequently entering into City contract for the Silo Digester No.3 Mixing and Heating System Design and Specifications Project. The Scope of Services (Scope) for this contract includes design services, bid phase services and services during construction (SDC) as outlined below.

SCOPE OF SERVICES:

The goal of this project is to provide design engineering services and related consulting services for final design of a project to add mixing to Silo Digester No.3 and verify provisions for adding digester heating in the future, so it can be used as a primary digestion facility. Silo Digester No. 3 is a 2.85-million-gallon concrete vessel and has served as a secondary digester/sludge storage due to the absence of integrated mixing and heating systems.

Scope items in RFQu #6460-25 are:

- Kickoff meeting with city project manager and other staff including a walking tour of the building/site.
- Review any existing historical plans for the facility, affected utility and operational services, and its structure.
- Prepare 60% and 90% plans and final PS&E package for bidding.
- Prepare, submit, monitor, (amend as necessary), and complete all required permitting.
- Plan construction phasing to allow for continuous plant operation within the digestor facilities during the rehabilitation work.
- Coordinate with city during design to identify and design for impacts to water, sewer, electrical, gas, stormwater and other onsite utilities.
- Coordinate closely with RPWRF staff on impacts and needed modifications for materials storage area, contractor work area, and plant operational impacts.
- Assist the City in responding to contractor questions during bidding, prepare supporting docs for bid addendums as need, review bid results.
- Assist the City in responding to submittals and RFIs during the construction phase.

The following is a list of professional services included under this Contract: Process Engineering, Structural Engineering, Electrical Engineering, and SCADA as these services pertain to the addition of future heating and mixing to Silo Digester No. 3. Building Mechanical (HVAC) and Plumbing engineering, and architectural

design services are anticipated to be minor adjustments to existing systems to accommodate the mixing system.

Several scoped tasks are noted to be 'Contingency Allowance' and require separate notice to proceed (NTP) from the City.

Jacobs' included tasks and milestones are as outlined below.

WORK TASK 1 - Project Initiation, Kick-Off and Project Management

Work Task 1.1 - Project Initiation and Setup

Work Task 1.2 - Kickoff meeting - Jacobs will attend a kickoff meeting with City project manager and other staff including a walking tour of the building/site.

Work Task 1.3 - Project Management - Jacobs will perform project management activities including monitoring and administration duties, participation in regularly scheduled progress meetings with the City, and project quality assurance and quality control (QA/QC) activities, maintaining a change log, as needed. Monthly progress reports and progress billings will be prepared in Jacobs standard format.

Assumptions:

- Kickoff and walking tour will include three Jacobs staff and last 6 hours, excluding travel time
- Weekly half hour meetings with client project manager –attended by Jacobs PM and DM, with participation (as needed) by design team depending on meeting agenda –not to exceed 60 hours of Jacobs' time. Project schedule is included herein.

WORK TASK 2 - Silo Digester No. 3 Mixing System Technology Evaluation and Decision Workshop

Work Task 2.1 - Confirm Silo Digester No. 3 Design Criteria – Based on work to date on the City's Wastewater Facility Planning Services for Riverside Park Water Reclamation Facility (OPR 2025-0460), confirm design criteria for Silo Digester No. 3 mixing.

Work Task 2.2 - Mixing System Evaluation – Based on criteria developed in Work Task 2.1, Jacobs will evaluate mixing system alternatives and work with the City to recommend a system for implementation.

Mixing design requirements, configuration, type, cost, limitations, and implementation will be evaluated, including consideration of code and regulatory requirements. A conceptual design of a mixing system will be developed including mixing pump(s), nozzles, and pipe.

A lifecycle cost analysis will be completed for all alternatives to aid in selection of the preferred design approach.

Work Task 2.3 - Digester Draining System Evaluation – The City is unable to drain Silo Digester No. 3 below the 36-inch Manway No. 1 and No. 2, which makes it challenging to use these access points for cleaning. Jacobs will evaluate the existing digester draining system to determine why the sludge level cannot be drawn down to a lower level. A conceptual design for modifications to improve digester draining will be developed and may include modifications to the 6-inch BL, 6-inch DST, or 14-inch DST pipes or provisions to use the mixing system for draining the digester.

Work Task 2.4 - Verify Provisions for Future Heating – Confirm that existing digester wall penetrations can be used for heating recirculation pump suction and discharge should a future decision be made to add heating to Silo Digester No. 3. Identify possible space requirements for a future heating system so that design of mixing system can accommodate future upgrades. This task includes a review of assumptions regarding future heating included in the original Silo Digester No. 3 design and confirming those assumptions remain appropriate given current plans for expansion of the RPWRF digester system.

Work Task 2.5 - Evaluation and Decision Workshop – A workshop will be conducted with the City to present findings and collectively decide on preferred mixing system to implement. Jacobs will prepare PowerPoint slides to summarize the evaluation and provide a basis for discussion during the workshop. The slides will be provided to the City prior to the workshop.

Work Task 2.6 - Technology Evaluation Documentation - Following completion of the workshop, Jacobs will provide draft and final technical memorandums (TMs) documenting the process, analysis, and decisions made during Tasks 2.1, 2.2, 2.3, 2.4, and 2.5.

Assumptions:

- Jacobs will reasonably rely upon the accuracy and completeness of the information/data provided by Owner or other third parties.
- Two mixing system alternatives will be evaluated: a traditional pump and nozzle mixing system and hybrid pump and gas mixing system.
- Existing digester wall penetrations will be used for mixing pump suction and discharge.
- Mixing pumps will be located within the existing Digester Thickening (DT) Building.
- Draining system improvements will be limited to minor modifications to existing piping within Silo Digester No. 3. If more extensive modifications are required to allow draining below the 36-inch manway, an amendment to this Agreement to incorporate the modifications into the design will be executed.
- Design of provisions for future heating systems are not included. Accommodations for a possible future heating system will be based on current available wastewater facilities planning information and engineering judgement.
- Silo Digester No. 3 will be taken off-line, drained, and cleaned if necessary for visual inspection of pipes penetrations. Confined space entry, if required, will be facilitated and permitted by City personnel. If possible, Jacobs staff will be on site during draining as part of Work task 2.3 Digester Draining System Evaluation.
- Engineer's Opinion of Probable Construction Cost (OPCC) for the alternatives evaluation will have a range of accuracy based upon AACE International Recommended Practice No. 17R-97, Class 5, 0 to 2 percent project definition, +100% to -50% Range of Accuracy.
- The mixing system evaluation workshop will be held at the WRF with a virtual meeting option for Jacobs staff not located in Spokane. Jacobs process mechanical engineer and project manager will attend the workshop in person.
- Jacobs will submit draft technical TMs in pdf document format via email for review and comment.
- Jacobs will update the TMs based on client comments and provide the final memorandums in pdf format stamped by a Professional Engineer registered in Washington.

WORK TASK 3 - Silo Digester No. 3 Mixing System 30% Design and Basis of Design Report

Work Task 3.1 - 30% Design: Advance the conceptual designs developed in Work Task 2 to include support of the following disciplines: Process mechanical, corrosion, electrical, instrumentation and control, structural, and civil.

Work Task 3.2 - Prepare a Schematic-level Basis of Design Report (BODR) capturing design concept preferences from the Client, detailing design criteria, project requirements, proposed equipment, and code and compliance review. In addition to the selected alternatives for mixing (Work Task 2), the following will be considered/addressed in coordination with RPWRF staff:

- Construction phasing to allow for continuous plant operation within the digestor facilities during the rehabilitation work.
- Impacts to water, sewer, electrical, gas, stormwater and other onsite utilities.
- Impacts and needed modifications for materials storage area, contractor work area, and plant operational impacts.

Work Task 3.3 - 30% Schematic Design: Drawings describing the work defined in the Task 3.1 Schematic-level BODR. Deliverables will include one electronic, searchable and bookmarked pdf of the drawings and a full list of expected project specifications. Drawings and specification list will not be stamped or signed.

Work Task 3.4 - Cost Estimating: 30% OPCC

Assumptions:

- Site visit for process mechanical engineer and design manager – two Jacobs staff; 6 hours on site each; travel time excluded
- BODR figures will include catalog cuts and marked up pdfs. BODR figures will be to the level needed to describe the work and develop CAD drawings.
- A review comment adjudication meeting will be conducted via MS Teams.
- The draft Concept-level BODR will be revised and finalized once.

WORK TASK 4 - Engineering Design – 60%/90%/Final Design/Estimate

Work Task 4.1 - Laser Scanning (LS) and Site Survey

Work Task 4.1.1: Provide LS of Silo Digester No. 3, the DT Building, and the area in between these two structures to capture overhead, vertical, horizontal, and sub-level information. The LS will be used with existing design and as-built information to develop a 3D model of the existing facilities to be upgraded.

Work Task 4.1.2: Site Survey Contingency Allowance (requires separate NTP from City): A contingency allowance of $4,000 is included for topographic site survey work.

Work Task 4.2 - 60% Design Development: Advance the Silo Digester No. 3 mixing system design with further development of the 30% preliminary layouts and sections, development of additional project details, and editing/creation of specifications. Design will include support of the following disciplines: Process mechanical, corrosion, electrical, instrumentation and control, structural, and civil. A review comment adjudication meeting will be conducted via MS Teams.

Work Task 4.3 - 90% Draft Construction Drawings: Finalize Silo Digester No. 3 mixing system design, incorporating feedback from stakeholders and confirming compliance with all City standards as confirmed by the City at the start of the project. Design progression will include finalization of all major specification items, finalization of all major details, finalization of drawings and support of other project activities (permitting, etc.) Design will include support of the following disciplines: Process mechanical, corrosion, electrical, instrumentation and control, structural, and civil. A review comment adjudication meeting will be conducted via MS Teams.

Work Task 4.4 - 100% Final Construction Drawings: Deliver complete and approved Silo Digester No. 3 mixing system design packages, including construction drawings, specifications, and standard details. 100% Design Documents will be signed and sealed by a Professional Engineer registered in Washington for submission to the City.

SCADA/I&C Design will include adding the following to the existing Silo Digester No. 3 mixing system monitoring and controls:

- Pumped mixing system with chopper pump on VFD (closed loop – on/off; lead/standby), assuming a traditional pump and nozzle mixing system is selected.
- Pressure/flow instrumentation

Work Task 4.5 - Cost Estimating: OPCCs will be provided at 60%, and 90% phases of design and a Class 1 Engineer's Estimate at Final Design.

Assumptions:

- Work Task 4.1 is an early design task and may be completed prior to submission of Task 3 drawings deliverable.
- All required equipment will fit in existing buildings/structures without structural modifications. Design of new building(s)/structure(s) or structural modifications is not included in this scope, and a contract amendment will be required if new building(s)/structure(s) or structural modifications are needed.
- Client reviews will be conducted using .PDF files. No printed sets of drawings will be delivered. City may provide comments on the .PDF drawings or separately in MS Word or MS Excel format.
- A special deliverable for Ecology review is not included.
- Drawings will conform to RPWRF Program and City standards, as confirmed by the City.
- Drawings will be developed using Jacobs' standard CAD software Bentley MicroStation.
- Assumed drawing list is attached to this scope of work.
- Standard details will be submitted, as appropriate, as a separate 8.5x11 detail book as part of the 100% Design submission.
- Specifications will be based on Jacobs master specifications and Engineers Joint Contract Documents Committee® (EJCDC) standard general conditions. Jacobs will provide procurement and contracting specifications (Division 00). City General Special Provisions and WSDOT standard specifications will not be used.
- Jacobs will provide 65 technical (Division 01 through 48) specification sections.
- Building heating, ventilation and air conditioning (HVAC) energy and heat load modeling are not included as part of this Scope. HVAC upgrades design is not required.

- A site topographic survey is not anticipated. Design will be based on LS, available record drawings and field measurements. A contingency allowance has been included if it is determined that a site survey is needed.
- A decision log will be maintained by Jacobs during all phases of design to facilitate change management.
- The following site visits, including travel time, are budgeted:
    - Project Manager -– 4 Site visits, up to 4 hours per trip
    - Process Mechanical Engineer – 2 Site visits, up to 12 hours per trip
    - Design Manager – 1 Site visit, up to 16 hours
    - Electrical Engineer – 2 Site visits, up to 16 hours per trip
    - I&C Engineer – 1 Site visit, up to 16 hours
    - Structural Engineer – 1 Site visit, up to 16 hours
- Post-QC Adjudication workshops will be conducted via MS Teams – up to a maximum of three workshops—1 per design phase. Six Jacobs staff will attend each workshop.
- SCADA/I&C Design:
    - Three I&C Specification Sections will be produced
    - Instrument list and option sheets will be supplements to the specifications. No separate datasheets or additional will be provided. Data sheets for each instrument will be provided by Contractor as a submittal for review by Jacobs.
    - The PLC I/O list will be a supplement to the specifications.
    - PLC components will be listed on a drawing or in Section 40 91 00 I&C Components
    - The design does not include new network components (includes remote IO switches).
    - The design does not include new panels.
    - Jacobs will perform the SCADA programming (Task 7.2 of this scope)
- OPCCs will have a range of accuracy based upon AACE International Recommended Practice No. 17R-97:
    - Class 4, 1 to 15 percent project definition, +50% to -30% Range of Accuracy
    - Class 3, 10 to 40 percent project definition, +30% to -20% Range of Accuracy
    - Class 2, 30 to 70 percent project definition, +20% to -15% Range of Accuracy
    - Class 1, 50 to 100 percent project definition, +15% to -10% Range of Accuracy

WORK TASK 5 - Environmental Permitting Support

A shoreline substantial development conditional use permit, variance, and special permit from City of Spokane, and an air quality permit from Spokane Regional Clean Air Agency Coordination, are in place for the current RPWRF facility (including Silo Digester No. 3) and operation. It is anticipated that any changes to the site, facility, or operations outside of the existing permitted conditions will require, at minimum, an update or amendment to the previous permits and possibly new permits. Because the need for changes to the site, facility, or operations is unknown at the time of scoping, the environmental permitting support task includes permitting contingency allowances to be used if update or amendment to the previous permits or new permits are required.

Jacobs will provide the following environmental permitting support:

Work Task 5.1 - Pre-Application Meeting and SEPA Checklist (90 hours budgeted)

- After all major equipment and facilities and their locations have been identified (assumed to be after completion of the 30% design), Jacobs will arrange and attend a

pre-application meeting with the City to determine the permitting requirements for the Project, which may include an update, amendment, or new shoreline substantial development conditional use permit, variance, and special permit.

  - Jacobs will complete a pre-application form and provide supporting documentation for submittal to the City.
  - Jacobs will attend the pre-application meeting. If comments are received from the City, Jacobs will draft a response log for submittal to the City.

- Jacobs will develop a timeline for agency coordination and preparation of documentation needed to obtain permits.
- Jacobs will prepare a SEPA checklist for addition of Silo Digester No. 3 heating and mixing. The SEPA checklist will be based on previous SEPA checklists and available studies/information for RPWRF No assessments (cultural, ESA, habitat, aquatic) are included in this scope of work

Work Task 5.2 - Additional Permitting Contingency Allowance (requires separate NTP from City)

- This task provides an allowance of $25,800 for update or amendment to the existing Shoreline Substantial Development Conditional Use Permit, Variance, and Amendment to Special Permit, or preparation of a new Shoreline Substantial Development Permit, Conditional Use Permit and/or Variance, whichever the City determines is appropriate.

Work Task 5.3 – Spokane Regional Clean Air Agency Coordination

- After all major equipment and facilities and their locations have been identified (assumed to be after completion of the 30% design), Jacobs will coordinate with Spokane Regional Clean Air Agency and the City to determine if an update, amendment, or new Air Quality Permit is required (40 hours budgeted).

Work Task 5.4 – Air Permitting Contingency Allowance (requires separate NTP from City)

- This task provides an allowance of $68,300 for update or amendment to current air quality permit, or a new permit. Modeling and/or emissions analysis and report, if required, are covered under the allowance.

Assumptions:

- Permitting activities in addition to those specifically included in Work Tasks 5.1. 5.2, 5.3 and 5.4 are not included in this Scope.
- SEPA Checklist preparation does not include field visits or other research for resources assessments (i.e., cultural resources investigations, habitat assessments, wetland and stream delineations).
- Construction & Building permits (including fees) shall be the responsibility of the Contractor.
- Environmental permitting support does not include construction or building related permits.

WORK TASK 6 - Bidding Support

Work Task 6.1 - Bidding Support: Jacobs will provide the following bidding services:

- Respond to bidders' questions, 100 hours budgeted
- Prepare and issue addenda if required, 200 hours budgeted
- Attend up to one pre-bid conference/site walk

- Review bids and make a recommendation to Client regarding contract award

Assumptions:

- The City will advertise bidding and manage plan rooms and/or, the City's online bidding platform.
- The City will serve as the primary point of contact for bidders. Bidder questions will be directed to Jacobs as needed.
- One Jacobs staff will attend a two-hour pre-bid Meeting. The meeting will be held at RPWRF and will be attended in person by local Jacobs staff.
- One addendum will be prepared to respond to up to five bidder questions.
- The City will conduct bid opening, and issue Notice of Award. Jacobs staff will not attend the bid opening.
- There will be a single bidding round. Services related to bid rejection and re-bidding are not included.

WORK TASK 7 - Services During Construction (SDC)

Work Task 7.1 - Jacobs will provide the following engineering SDC:

- Prepare Conformed Documents (incorporating addenda into a single updated set of contract documents)
- Responding to requests for information for clarification budgeted to a maximum of 150 hours.
- 80 Submittal reviews at City's request, including resubmittals, budgeted for a maximum 200 hours.
- Up to nine site visits for engineering observations – primarily expected to be lead process mechanical engineer and SDC manager.

Work Task 7.2 - Jacobs will provide the following services related to SCADA/I&C software programming and testing:

- Loop Descriptions (including a virtual meeting with the City)
- Programming and factory testing = maximum I/O count (40) total, combination of hardwire and ethernet, at 2 hours per point = 80 hours
- Field testing = 48 hours including travel
- Update existing SCADA operations guide = 10 hours

Work Task 7.3 - Jacobs will provide the following project closeout services:

- Substantial completion review including onsite review of one final Punch List, to be developed by contractor. Site walk to include only process mechanical engineer and project manager.
- Prepare record drawings to capture Contractor's final as-built markups of the 100% Design drawings submission (170 hours budgeted)

Assumptions:

- The construction period, not including bidding and award, will last 12 months beginning January 2030.
- The project will be constructed under one general contract for construction.
- The City will perform the following, which are not included in SDC performed by Jacobs:

- Verify that the required permits, bonds and insurance have been obtained and submitted by the Contractor
- Provide on-site construction management and inspection
- Provide construction contract administration
- Provide Contractor schedule review
- Be actively involved in the construction process to make decisions, provide approvals, and perform other actions necessary for the completion of the construction
- Develop and implement a document management system and procedures for submittals, requests for information (RFIs), etc.
- Be responsible for implementing and maintaining regular communications with the Contractor during the construction, including regular construction meetings
- Receive and log communications from the Contractor and coordinate the communications between Jacobs and the Contractor. All project related communications between Jacobs and the Contractor or the Contractor's subcontractors will go through the City.
- Provide field inspection staff, who will prepare written reports, diaries or other records of their observations, which will be made available to Jacobs
- Provide a desk and internet connectivity for Jacobs staff when staff are working on-site
- Arrange for monthly photographs of the work in progress by the Contractor, which will be made available to Jacobs
- Review Contractor pay applications, monitor and manage Contractor payments
- Create, monitor and manage punch list(s)
- Manage purchasing and reporting requirements for any state and federal funding, such as certified payrolls, disadvantaged business enterprise documentation, Buy American and Build America Buy America, etc.
- Perform Contract closeout (determining completion, vendor training and O&M manuals, warranties, etc.)
- Coordinate Warranty services with General Contractor
- Receive, log, and notify Jacobs about all letters and notices from the Contractor concerning claims or disputes between the Contractor and City pertaining to the acceptability of the work or the interpretation of the requirements of the contract for construction.

- In addition to those tasks specifically performed by the City listed above, Jacobs' scope does not include:
  - Attendance at regular construction meetings
  - Preparation and/or review of construction changes
  - Testing and inspection, or review of contractors work for defects or deficiencies.
  - Factory and off-site tests and inspections (except SCADA testing as described herein)
  - Field startup and testing (except SCADA testing as described herein)
  - Updates to RPWRF Operations and Maintenance Manual
  - Work related to Contractor claims or disputes
- Site visit durations will be one half day, not including travel time, unless noted otherwise.
- SCADA software programming and testing:

- The level of effort for SCADA software services is based on a maximum I/O count of 86 points, including hardwired and Ethernet-connected I/O.
- Programming will follow Jacobs standards
- Automated reports (reports produced using data from the SCADA historian for permit compliance or operator use) are not included.
- Operational technology (network and computer environment that is foundation of SCADA system) services are not required or included.
- No package systems will be incorporated into the SCADA system.
- All work will be performed remotely except onsite field testing.

- Record drawings will be in .PDF format. Jacobs will not verify Contractor's as-built markups.

GENERAL ASSUMPTIONS, CLARIFICATIONS, AND EXCLUSIONS:

1. Design Services. Only the services and tasks outlined above are included in this scope. Additional Services, such as a new building or structure, new or upgraded digester roof, structural modifications, digester feed pumping or piping modifications, incorporating digester heating, covering and/or insulation into the design, storage area design, upgrades to meet National Fire Protection Association® (NFPA) 820 requirements, landscape design, and site utilities design, may be added for additional fee.
2. Code and regulatory requirements to be addressed are limited to Spokane Municipal Code 17F.040 Building Code NFPA 820 current at the time of contract execution (2021 International Building Code (IBC) and 2024 NFPA 820).
3. Changes. If the City makes changes to the Scope of Services in this Agreement and such changes affect Jacobs' cost of or time required for performance of the services, an equitable adjustment will be made through an amendment to this Agreement. Jacobs will maintain a Changes Log to track client-approved changes.
4. City Review. City review of all draft deliverables will be two weeks, and comments from all reviewers will be consolidated and provided in a single word document. Jacobs will provide responses to all City comments and City will confirm comments are closed out and incorporated into subsequent deliverables.
5. Environmental Services. This proposal does not include Environmental Services related to identification or remediation of asbestos, hazardous materials, or toxic materials. In the event the project is impacted by latent or recognized environmental conditions, the City of Spokane will undertake any applicable environmental consulting services.
6. City-furnished Information. Jacobs will reasonably rely upon the accuracy and completeness of the information/data provided by City or other third parties.
7. Permit Fees. The cost of any permits, licenses, fees, etc. required for this project are not included in this Scope. Jacobs assistance with responding to and obtaining required permit approvals will be limited to one round of responses to agency comments.
8. Cost Estimates. Any cost estimates provided by Jacobs will be on a basis of experience and judgment. Since Jacobs has no control over market conditions or bidding procedures, Jacobs does not warrant that bids or ultimate construction costs will not vary from these cost estimates.
9. Construction Support Services. If Jacobs is called upon to observe the work of City's construction contractor(s) for the detection of defects or deficiencies in such work, Jacobs will not bear any responsibility or liability for such defects or deficiencies or for the failure to so detect. Jacobs shall not make inspections or reviews of the safety programs or procedures of the construction

contractor(s) and shall not review their work for the purpose of ensuring their compliance with safety standards. If Jacobs is called upon to review submittals from construction contractors, Jacobs shall review and approve or take other appropriate action upon construction contractor(s)' submittals such as shop drawings, product data and samples, but only for the limited purpose of checking for conformance with information given and the design concept expressed in the contract documents. Jacobs's action shall be taken with such reasonable promptness as to cause no delay in the work while allowing sufficient time in Jacobs' professional judgment to permit adequate review. Review of such submittals will not be conducted for the purpose of determining the accuracy and completeness of other details such as dimensions and quantities. Jacobs shall not assume any responsibility or liability for performance of the construction services, or for the safety of persons and property during construction, or for compliance with federal, state and local statutes, rules, regulations and codes applicable to the conduct of the construction services. Jacobs shall have no influence over the construction means, methods, techniques, sequences or procedures. Construction safety shall remain the sole responsibility of the construction contractor(s). All contracts between the City and its construction contractor(s) shall contain broad form indemnity and insurance clauses in favor of the City and Jacobs, in a form satisfactory to Jacobs.

10. Jacobs does not warrant or guarantee work performed by others, including City's vendors, contractors, and subcontractors.

SCHEDULE

November 2026 through January 2031, inclusive of design, bid phase services and SDC. Dates in the table below are assumed and may change as the project progresses.

Assumed Schedule -RPWRF Silo Digester No. 3 Heating and Mixing			
Task Name	**Start (Dates)**	**Duration (Calendar Days)**	**Finish (Dates)**
Notice to Proceed (Assumed)	11/2/2026		11/2/2026
Project Initiation and Preparation for Kickoff	11/3/2026	28	12/1/2026
Kickoff Meeting/Walking Tour	12/3/2026	0	12/3/2026
Task 2: Digester No. 3 Mixing System Technology Evaluation			
2.1: Confirm Silo Digester 3 Design Criteria	11/2/2026	11	11/13/2026
2.2: Mixing System Evaluation	11/16/2026	84	2/8/2027
2.3: Draining System Evaluation	11/16/2026	14	11/30/2026
2.4: Verfity Provisions for Future Heating	11/16/2026	14	11/30/2026
2.5: Decision Workshop	2/8/2027	0	2/8/2027
2.6: Technology Evaluation Documentation			
Draft	2/9/2027	42	3/23/2027
Review by Client	3/24/2027	19.6	4/12/2027
Final	4/13/2027	30.8	5/14/2027
Task 3: Basis of Design Report (BODR) and 30% Design			
3.1: Advance Conceptual Design	5/1/2027	84	7/24/2027
3.2 Basis of Design Report			
Draft	7/1/2027	42	8/12/2027
Review by Client	8/13/2027	21	9/3/2027
Final	9/4/2027	33.6	10/7/2027
3.3: 30% Drawings	7/1/2027	84	9/23/2027
3.4: 30% OPCC	8/13/2027	21	9/3/2027
Task 4: Engineering Design 60/90/Final			
4.1: Laser Scanning and Site Survey	7/1/2027	28	7/29/2027
4.2: Design Development (60%)	10/8/2027	126	2/11/2028

Review by Client	2/12/2028	21	3/4/2028
4.3: Draft Contract Documents (90%)	3/5/2028	126	7/9/2028
Review by Client	7/10/2028	21	7/31/2028
4.4 Construction Documents (100%)	8/1/2028	87	10/27/2028
4.5 Cost Estimating	10/8/2027		10/8/2027
			1/0/1900
Task 5: Permitting Support			
5.1: Pre-application Meeting and SEPA Checklist	10/8/2027	28	11/5/2027
5.2: Additional Permitting	TBD		
5.3: Spokane Clean Air Agency Coordination	10/8/2027	28	11/5/2027
5.4: Air Permitting	TBD		
Task 6: Bidding Phase	**6/1/2029**	42	7/13/2029
Award and Construction Contracting	7/14/2029	178	1/7/2030
Task 7: Services During Construction	1/8/2030	364	1/7/2031

DELIVERABLES

Upon completion of each of the above tasks the following deliverables are to be provided to the City Project Manager at the scheduled time/date indicated:

WORK TASK 1 - Project Initiation, Kick-Off, and Project Management

- Kick-off meeting PowerPoint presentation and meeting summary
- Monthly invoice packages including progress report (32 packages total)
- Issues / Decisions/Change Logs
- Project schedule and quarterly updates

WORK TASK 2 - Silo Digester No. 3 Mixing System Technology Evaluation and Decision Workshop

- Workshop slides for City review prior to workshop
- Workshop with the City attended by Jacobs' Subject Matter Experts (SMEs), either in-person or virtually
- Technical Memorandums (TMs), draft and final, discussing mixing technologies for Silo Digester No.3, Silo Digester No. 3 draining options, and provisions for future heating.

WORK TASK 3 - Silo Digester No. 3 Mixing System 30% Design and Basis of Design Report

- Schematic-level BODR, draft and final
- Schematic Design (30%) Drawings and Specification Table of Contents, draft and final
- 30% OPCC, draft and final

WORK TASK 4 - Engineering Design - 60%/90%/Final Design/Estimate

- LS point cloud data of Silo Digester No. 3, the DT Building, and the area in between these two structures to be incorporated into 3D model; site survey if authorized by City
- Design Development (60%) Drawings, Preliminary Specifications for key materials, 60% workshop agenda and meeting minutes, 30% comment responses, final BODR as noted above
- Draft Construction (90%) Drawings, Standard Details and Specifications, 90% workshop agenda and meeting minutes, 60% comment responses
- Final Construction (100%) Drawings, Standard Details and Specifications, 90% comment responses. Deliver 100% for Permit.
- OPCC at 60%/90%

WORK TASK 5 - Environmental Permitting Support

- Pre-application meeting with the City and completed SEPA checklist
- Additional permitting activities if authorized by City (contingency allowance
- Spokane Regional Clean Air Agency Coordination
- Updated/amended air quality permit or a new permit if authorized by City (contingency allowance)

WORK TASK 6 - Bidding Support

- Bidder question responses
- One addendum to address comments, if required
- Attend prebid meeting
- Results of bid review and provide recommendation letter to City

WORK TASK 7 - Services During Construction

- Conformed Documents
- Responding to requests for information for clarification
- Submittal review responses
- Site visit summaries
- Comments on Punch List
- SCADA/I&C Programming and Testing
- Record drawings

COMPENSATION SCHEDULE:

Total compensation for this scope is $1,738,888, including contingency allowances of $98,064. A cost summary is shown below:

Level of Effort and Budget - RPWRF Silo Digester No. 3 Heating and Mixing	JACOBS	JACOBS	JACOBS	Total
Task	Labor Hours	Labor Cost	Expense	Task Amount
Task 1 - Project Initiation, Kick-Off and Project Management	400	$87,606	$1,200	$88,806
Task 2 - Technology Evaluation and Decision Workshop	398	$78,059	$500	$78,559
Task 3 - Basis of Design Report/30% Design/Estimate and Permitting Timeline	1,411	$281,937	$500	$282,437
Task 4 - 60%/90%/Final Design/Estimate	4,348	$848,643	$13,508	$862,151
Site Survey Contingency Allowance*				$4,000
Task 5 – Permitting	130	$24,597	$700	$25,297
Environmental Permitting Contingency Allowance*	138			$25,743
Air Permitting Contingency Allowance*	314			$68,321
Task 6 - Bidding Support	332	$75,958	$0	$75,958
Task 7 - Services During Construction	1,022	$219,216	$8,400	$227,616
Total without Contingency Allowances	8,041	$1,461,558	$24,808	$1,~~644~~640,824
Total with Contingency Allowances	8,493	$1,552,234	$25,298	$1,738,888
*Requires Written Authorization and NTP				

Invoices will be sent monthly for services rendered. Reimbursables which have been pre-approved in writing by the City will be invoiced at actual cost.

BILLING RATES:

U.S. Based staff will be billed at a 2.81 multiplier inclusive of a 4 percent technology fee implemented by Jacobs to cover the costs related to information technology infrastructure and third-party software. Global Integrated Delivery staff will be billed according to the following rate table:

		2026 $/hour	2027 $/hour	2028 and beyond
Support	JS1-4, JT1-3, JP1	110	115	4%/year increase
Intermediate	JT4-5, JP2-3, JM1-2	125	130	4%/year increase
Senior	JP4-5, JM3-4	140	145	4%/year increase
Specialist	JP6-8, JM5-7	150	155	4%/year increase

Attachment 1 – Assumed Drawing List

A preliminary drawing list for the project is presented below.

GENERAL	
G-G-001	TITLE, LOCATION AND VICINITY MAPS
G-G-002	INDEX TO DRAWINGS - SHEET 1
G-G-101	GENERAL LEGEND
G-G-102	ABBREVIATIONS
G-I-101	INSTRUMENTATION AND CONTROL LEGEND - SHEET 1
G-C-101	CIVIL LEGEND
G-S-101	STRUCTURAL NOTES - 1
G-S-102	STRUCTURAL NOTES - 2
G-M-101	MECHANICAL LEGEND
G-M-102	PIPING SCHEDULE
G-M-103	VALVE SCHEDULE
G-E-101	ELECTRICAL LEGEND
G-G-601	AREA CLASSIFICATION AND MATERIALS SELECTION TABLE
G-G-602	DESIGN CRITERIA
G-G-603	PROCESS FLOW DIAGRAM - SOLIDS
P&IDs	
SD-N-001	SWING DIGESTER MIXING PUMP
SD-N-002	SWING DIGESTER BUILDING MISCELLANEOUS
SD-N-003	NETWORK BLOCK DIAGRAM
SD-N-004	PLC PANEL CONCEPT
SITE	
S-C-100	SITE CIVIL PLAN - OVERALL
S-C-101	EROSION CONTROL PLAN
S-C-401	CIVIL DETAILS
S-CY-100	YARD PIPING PLAN - OVERALL
ELECTRICAL SITE	
S-E-100	ELECTRICAL SITE PLAN - OVERALL
SILO DIGESTER	
SD-MD-111	DEMOLITION LOWER LEVEL PLAN
SD-MD-401	DEMOLITION PHOTO DETAILS
SD-MD-402	DEMOLITION PHOTO DETAILS
SD-S-111	STRUCTURAL LOWER LEVEL PLAN
SD-M-111	MECHANICAL GROUND LEVEL PLAN
SD-M-121	MECHANICAL ROOF PLAN
SD-M-201	MECHANICAL SECTION
SD-M-202	MECHANICAL SECTION
SD-M-401	MECHANICAL DETAILS
SD-E-111	ELECTRICAL LOWER LEVEL PLAN
DIGESTER-THICKENING BUILDING	
DT-S-110	STRUCTURAL FOUNDATION/FLOOR PLAN OVERALL
DT-S-111	STRUCTURAL - FOUNDATION/FLOOR PLAN AREA 1
DT-S-112	STRUCTURAL - FOUNDATION/FLOOR PLAN AREA 2
DT-S-201	STRUCTURAL SECTIONS
DT-S-202	STRUCTURAL SECTIONS AND DETAILS
DT-M-110	MECHANICAL LOWER LEVEL PLAN OVERALL

DT-M-111	MECHANICAL LOWER LEVEL PLAN AREA 1
DT-M-112	MECHANICAL LOWER LEVEL PLAN AREA 2
DT-M-120	MECAHNICAL UPER LEVEL PLAN OVERALL
DT-M-121	MECHANICAL UPPER LEVEL PLAN AREA 1
DT-M-122	MECHANICAL UPPER LEVEL PLAN AREA 2
DT-M-201	MECHANICAL SECTIONS
DT-M-202	MECHANICAL SECTIONS
DT-M-401	MECHANICAL DETAILS
DT-M-501	MECHANICAL ISOMETRIC
DT-E-110	ELECTRICAL LOWER LEVEL PROCESS PLAN OVERALL
DT-E-111	ELECTRICAL LOWER LEVEL PROCESS PLAN AREA 1
DT-E-112	ELECTRICAL LOWER LEVEL PROCESS PLAN AREA 2
DT-E-120	ELECTRICAL UPPER LEVEL PROCESS PLAN OVERALL
DT-E-121	ELECTRICAL UPPER LEVEL PROCESS PLAN AREA 1
DT-E-122	ELECTRICAL UPPER LEVEL PROCESS PLAN AREA 2
DT-E-501	ELECTRICAL ONE-LINE DIAGRAM
DT-E-502	SOLO DIGESTER MIXING PUMP CONTROL DIAGRAM
DT-E-503	RECIRCULATION PUMP 1 AND 2 CONTROL DIAGRAM
DT-E-505	HOT WATER PUMP CONTROL DIAGRAM
DT-E-506	CABLE BLOCK DIAGRAM
DT-E-507	CABLE BLOCK DIAGRAM
DT-E-508	PANEL SCHEDULE
STANDARD DETAILS	
S	STRUCTURAL STANDARD DETAILS
M	MECHANICAL STANDARD DETAILS
M	MECHANICAL STANDARD DETAILS
C	CIVIL STANDARD DETAILS
E	ELECTRICAL STANDARD DETAILS
N	I&C STANDARD DETAILS

Bid Response Summary

Bid Number	RFQu 6460-25
Bid Title	Silo Digester No.3 Mixing and Heating System - Design and Specifications
Due Date	Monday, November 3, 2025 1:00:00 PM [(UTC-08:00) Pacific Time (US & Canada)]
Bid Status	Closed to Bidding
Company	Jacobs
Submitted By	Crystal Sackman - Friday, October 31, 2025 2:40:45 PM [(UTC-08:00) Pacific Time (US & Canada)] crystal.sackman@jacobs.com
Comments	

Question Responses

Group	Reference Number	Question	Response
Proposer Acknowledgements			
	1	Proposer Acknowledges receipt of Addenda by entering quantity of Addenda here (enter 0 if none have been issued):	2
	2	Proposer agrees and acknowledges that Request for Proposal document(s) and all related information has been read and understood.	AGREED AND ACKNOWLEDGED
	3	Proposer confirms meeting the minimum qualifications as identified in Paragraph 1.4 “Minimum Qualifications”.	AGREED AND ACKNOWLEDGED
	4	Proposer acknowledges and agrees with Paragraph 4.4 Award/Rejection of Proposal/Contract.	AGREED AND ACKNOWLEDGED
	5	Proposer agrees and acknowledges compliance with Terms and Conditions in Request for Proposal document(s). If answer is " AGREED WITH EXCEPTION IDENTIFIED", include requested exception in proposal submittal on separate page and title as “Exception to Terms and Conditions”. The City will consider and determine if exception will be accepted.	AGREED AND ACKNOWLEDGED
	6	Proposer agrees and acknowledges that proprietary information must be included in Proposal submittal on separate page(s) and clearly identified as “Proprietary”. See “Proprietary Information/Public Disclosure” Paragraph for public record requirements.	AGREED AND ACKNOWLEDGED

	7	Proposer has included Letter of Submittal with Proposal combined into one document per Section 3 "Proposal Content" instructions.	YES
	8	Provide the name, phone number and email address for point of contact person regarding this Proposal.	POC: Greta Gilman, PE T:509.464.7257 E: Greta.Gilman@jacobs.com
	9	Provide the name, phone number, and email address for the person in your Firm that would potentially sign a contract through the DocuSign process used by the City.	Binding Authority: Jeremy Hollingsworth T: 206.940.1529 E: Jeremy.Hollingsworth@jacobs.com
DOCUMENTS TO UPLOAD			
	1	Upload Request for Qualifications Proposal Response (Proposal). Combine documents as needed prior to upload. Only one document can be uploaded in this line item.	Jacobs SOQ for Spokane RPWRF Silo Digester No. 3 Mixing-Heating RFQu 6460-25.pdf
	2	Upload Addenda documents if applicable and if not combined with uploaded Proposal response. Combine documents as needed prior to upload. Only one document can be uploaded in this line item.	
	4	Upload any other documents required or desired. Combine documents as needed prior to uploading. Only one document can be uploaded in this line item.	
	5	Upload any other documents required or desired. Combine documents as needed prior to uploading. Only one document can be uploaded in this line item.	



STATEMENT OF QUALIFICATIONS

Silo Digester No.3 Mixing and Heating System – Design and Specifications

RFQu No. 6460-25

Submitted to City of Spokane, Washington

November 3, 2025



Jacobs

Challenging today.
Reinventing tomorrow.

01 | Letter of Submittal

November 3, 2025

City of Spokane, 915 N Nelson St, Spokane, WA 99202

RE: Jacobs' proposal for City of Spokane Silo Digester No.3 Mixing and Heating System Design and Specifications, RFQu 6460-25

The City of Spokane (the City) is advancing the performance of its Riverside Park Water Reclamation Facility (RPWRF) by upgrading Silo Digester No.3 to serve as a primary digestion facility. This strategic investment will increase treatment capacity, improve operational efficiency, and make full use of existing infrastructure – all while maintaining uninterrupted plant operations. Jacobs is ready to support this effort with a team that knows your facility, understands your goals, and delivers dependable results.

Requested Information

A. Legal Entity: Jacobs Engineering Group Inc. (Jacobs)
999 West Riverside Avenue, Suite 500
Spokane, WA 99201

POC: Greta Gilman, PE
T:509.464.7257
E: Greta.Gilman@jacobs.com

Binding Authority: Jeremy Hollingsworth
T: 206.940.1529
E: Jeremy.Hollingsworth@jacobs.com

B. Legal Status: Corporation;
Location: Spokane

C. To the best of our knowledge and in the past 12 months, we do not have current or former employees from the City of Spokane who are employed by Jacobs or who sit on the firm's governing board.

D. Minimum Qualifications: We are licensed to do business in the State of Washington, and we have 78 years of experience in mechanical, civil, and structural engineering, as well as wastewater treatment.

E. Jacobs acknowledges the Firm will comply with all terms and conditions set forth in the RFQu, unless otherwise agreed by the City.

Efficient, Cost-Conscious Delivery from a Team that Knows RPWRF and Silo Digester No.3. Jacobs has partnered with the City for over 30 years to design and optimize RPWRF. Our deep familiarity with the plant's systems, standards, and staff allows us to move quickly and minimize demands on your operations team. As the original designer of Silo Digester No.3, and the bulk of the digestion facility, we are uniquely positioned to update the design to reflect current design criteria, codes, site conditions, and operational needs – our team can start faster by already being up-to-speed on the history and design intent.

As a testament to our ability to deliver on time and within budget, in the past five years, every assignment we've done for the City's Next Level of Treatment (NLT) contract has been completed within the agreed upon budget and schedule.

Supporting Infrastructure Upgrades Without Disrupting Operations. We understand the sensitive nature of facility retrofits in operating facilities. Through our past work at the RPWRF, we are intimately familiar with its operation and will collaborate with your staff to sequence the work around plant operations and seasonal considerations.

We are eager to continue supporting the City of Spokane RPWRF and look forward to next steps!

Jacobs Engineering Group Inc.



Greta Gilman, PE | Project Manager



Jeremy Hollingsworth, PE | Binding Authority

02 | Technical Proposal

A. Project Understanding and Approach

Project Understanding



The City of Spokane continues to invest in the long-term performance and reliability of the Riverside Park Water Reclamation Facility, a 30-acre site that treats an average of 30 million gallons of wastewater daily and operates around the clock. As part of this commitment, the City is enhancing the functionality of Silo Digester No.3 – originally designed by Jacobs and constructed in 2015 – to be used as a primary digestion facility. Silo Digester No.3 was built as a 2.85-million-gallon concrete vessel and has served as a secondary digester/sludge storage due to the absence of integrated mixing and heating systems. These elements were originally not included to reduce construction cost, but the time has come to install these systems and fully utilize the digester's capacity. **Jacobs designed the original digester, and our team brings a deep understanding of the structure, its operational context, and the broader RPWRF facility.** Many members of the original design and construction team are still with Jacobs, and we will leverage their insight to deliver the mixing and heating system design.

We understand that the project will begin with a site walk and review of existing documentation to inform design development, culminating in a complete PS&E package. Throughout, we will coordinate closely with City staff to manage permitting, maintain uninterrupted plant operations, and address utility and operational impacts. Close coordination with City staff will continue through the bidding and construction phases.

Silo Digester No.3 | Original Design Considerations

The City aimed for a cost-conscious design for Silo Digester No.3. It was originally intended to function as a secondary digester, allowing one of the two egg-shaped digesters (ESDs) to be taken offline for inspection and maintenance. Silo Digester No.3 was also designed to provide storage capacity if needed. Because it was expected to serve as a secondary digester or storage unit in the near term, heating and mixing systems were not initially constructed. However, the design incorporated provisions for future upgrades, facilitating eventual operation as a primary digester. After more than a decade of successful operation, the time has come to implement these upgrades and expand primary digestion capacity.

Silo Digester No.3 includes two 24-inch stub-out connections for mixing suction and discharge. These were intended to support future installation of a pumped mixing system. Pumped mixing remains a widely used and effective method and is likely the best option for Silo Digester No.3. Additionally, the City's pumped mixing systems on ESDs No.4 and 5 have performed well.

The digester also includes two 6-inch stub-out connections for future heating and recirculation, designed to accommodate a heat exchanger loop. These connections were based on the assumption that future sludge heat exchangers would be in the digester thickening building.

Steam injection and lances – used in the original ESD heating system – were not considered for Silo Digester No.3 and will not be part of this project. When the ESDs were designed, the City's goal for the steam heating system was to maintain temperature rather than fully heat incoming raw sludge, while maximizing use of the existing RPWRF steam infrastructure. However, the steam system did not meet expectations: it is ineffective when the ESDs are partially full, and hot steam can cause digester upsets. As a result, tube-in-tube heat exchangers were added to each ESD as the primary heating method with steam retained as the backup. The City now plans to phase out steam heating entirely.

Silo Digester No.3 Structure

The original design for Silo Digester No.3 included an exterior insulation and finishing system (EIFS), which was not installed during initial construction. Once the heating and mixing systems are built, the EIFS is expected to be installed as part of a separate project. EIFS will help insulate Silo Digester No.3, improving operational efficiency and aligning with the RPWRF aesthetic master plan guidelines. As part of the heating system design, Jacobs will confirm heating requirements based on the assumption that EIFS will be in place.

Cracking is typical for concrete structures of this type, and the design of Silo Digester No.3 accounted for this. Cracks that formed during construction were repaired using various injection techniques. According to the City, the digester is not leaking and there is no indication that it will leak in the future, as concrete cracks often self-heal over time.

Silo Digester No.3 is a robust structure, consistent with legacy CH2M (now Jacobs) designs for liquid-holding facilities subject to temperature differentials across the concrete. As such, it is well-suited to accommodate the heating system without requiring structural upgrades or modifications. Our original design considered the corrosive digester environment by including an epoxy liner. Our corrosion engineer has an in-depth understanding of corrosion risks in digesters and will help mitigate these risks by using proven methods that we have used on multiple digester projects, including applying protective coatings to the concrete and preventing oxygen from entering the digester.

RPWRF Site Permitting Considerations

The RPWRF property is located along the Spokane River within Riverside State Park, and much of the facility is within the 200-foot shoreline jurisdiction. As such, projects at RPWRF often require permits in accordance with the City's Shoreline Master Program guidelines. These may include supporting documents such as a Joint Aquatic Resource Application (JARPA). Since Silo Digester No.3 is already covered by an existing Shoreline Conditional Use Permit, a full permitting process for the addition of heating and mixing systems is not expected. However, if the upgrades involve constructing a new facility or building, additional permitting may be required. This could include updates to the existing Shoreline Master Program compliance and submission of a JARPA package, which can be used to streamline application for multiple federal, state, and local environmental permits.

The addition of a boiler or any other modification that could impact air quality requires a Notice of Construction (NOC), administered by the Spokane Regional Clean Air Agency (SRCA). Jacobs has supported RPWRF with similar NOCs and worked with SRCA to meet local air quality regulations through appropriate equipment selection and understanding the NOC process and requirements.

Approach and Methodology

We are ready to support the City in delivering a solution that meets technical requirements while aligning with operational priorities and minimizing disruption. Our overall methodology focuses on early decision-making in collaboration with the City's team, which is discussed immediately below. After that, we summarize the top-level tasks and discuss our work plan.

Technology Evaluation and Decision Workshop

Confirm Design Criteria | Jacobs is currently providing wastewater facility planning for the City. As part of this scope, we are conducting a solids stream capacity assessment. Based on this assessment – along with information gathered during our initial kick-off meeting and site tour, and a review of existing documentation – we will confirm key digester design criteria, including mean cell residence time, solids loading rate, and temperature.

Heating System | Our evaluation of the heating system begins with an analysis of boiler capacity, hot water loop, and recirculation pump requirements. This will confirm if the existing boilers can support the additional heat needed for Silo Digester No.3, determine the need for hot water pumps, evaluate heat exchanger options, and identify recirculation pump size. We understand the City prefers tube-in-tube heat exchanger design similar to the ESDs, but if space is limited, a spiral heat exchanger design provides similar performance in a smaller footprint.

The heating system evaluation will also help determine if digester insulation is needed as part of this project or if it can be delayed for a future project. The heat loss from the uninsulated digester could be roughly 50% higher than after insulation is added, which may result in significantly larger heating equipment or even insufficient heat capacity from the boilers. Jacobs will evaluate both insulation conditions and work with the City to determine the best approach.

There may be opportunities to share components of the heating system with the other digesters depending on the design requirements and the City's goals for redundancy and backup. We will evaluate how much of the existing infrastructure can be reused and what new components or upgrades may be necessary with the goal of providing the City the greatest possible value from the project. To do this, Jacobs will work collaboratively with the City during a decision-making workshop. Once these early decisions are set, we will determine spatial requirements – whether existing buildings can accommodate the equipment or if a building addition or new control structure is needed.

Wastewater Facility Plan Efficiencies

Greta is a key member of Jacobs' team working on the City's **Wastewater Facility Plan**, which creates valuable efficiencies with the design of the digester mixing system. For example, she is developing future flows and loads for RPWRF – an important input for confirming the digester design criteria. Jacobs is also characterizing the City's current and projected solids, which will support the development of the digester design criteria and assumptions. In addition, Jacobs recognizes that the heating and mixing approach selected for Silo Digester No.3 will influence future upgrades for the ESDs and future Digester No.2. We'll work closely with the Facility Plan team and the City to make decisions that align with the broader long-term vision.



The Jacobs team, including Nate Ebbs, Cameron Clark, and Jeff Moss, are currently performing similar services for the **City of Boise's Lander Street WWTP**, to add mixing, heating, and a new cover to a tank that is currently used for digested sludge storage. Using a collaborative decision-making process with the city's team, we evaluated mixing technology, building options for the new equipment, and extent of heating system upgrades needed.

Mixing System | A properly sized and well-designed mixing system is essential to maximizing capacity of Silo Digester No.3 as a primary digester. The mixing system will be designed as an independent system, but with similar redundancy and backup considerations as the heating system. The digester already includes pipe connections for pumped mixing, which is a widely used and effective approach. Additionally, the City's pumped mixing systems on ESDs No.4 and 5 have performed well. Pumped mixing will serve as the basis for design, although Jacobs has experience with all types of mixing technologies and can assist in reviewing mixing options if desired.

Jacobs recommends using computational fluid dynamics (CFD) modeling to optimize the mixing system design. CFD modeling – performed either by Jacobs or the mixing equipment vendor – will help assess if modifications to the internal mixing pipes in Silo Digester No.3 are needed.

To support equipment standardization, Jacobs will review the existing mixing pumps used in the ESDs and determine if the same model or a similar pump from the same manufacturer can be used for Silo Digester No.3. One or two mixing pumps may be dedicated to this digester, depending on the level of standby capacity desired by the City.



The Jacobs team, including Jeff Moss and Cameron Clark, is currently supporting the **City of Missoula, Montana** with a mixing system evaluation for their Digester 2 to provide adequate mixing for mesophilic digestion. Using a decision workshop, we are evaluating three types of mixing system technologies – internal draft tube, pump and nozzle, and linear motion – comparing mixer configuration, type, cost, limitations, implementation, permit requirements, and lifecycle cost. We suggest a similar process for RPWRF!

Based on what we've seen across the industry recently, it may be worthwhile for the City to **pre-purchase the mixing technology and electrical equipment** to make sure it arrives in time for construction. Similar projects elsewhere are experiencing 6+ month lead-times on this equipment. We can support the City in overcoming this potential schedule risk by providing recommendations for preparing pre-purchase bid packages for critical equipment.

We will explore the benefits and tradeoffs of these options with the City during the same decision-making workshop for the heating system. Once the preferred approach and technologies are selected, we will identify the technical disciplines required to complete the design and permitting process.

Mitigating Operational Impact to the RPWRF Dewatering and Gas System

Silo Digester No.3 will need to be removed from service for a short duration to make connections to the existing piping. Operating it as a primary digester may also require minor piping and control valve modifications to allow direct feed of thickened sludge. Jacobs will review the existing infrastructure to confirm that all necessary upgrades are incorporated in the project. Our in-house instrumentation and controls team is available to support any required control system modifications.

Through experience with other digester conversion projects, we've found that regular communication with the plant operations team is essential to discuss how operations will change during construction and after commissioning. Operations will need to maintain sufficient solids residence time in Silo Digester No.3 and manage feed and withdrawal cycles to support effective control of other unit processes and promote stable operation.

Managing gas pressure during direct withdrawal is critical to avoid negative impacts on the gas system. Additionally, effects on the dewatering system must be considered to determine if any changes to dewatering cycle or timing are needed. Jacobs can provide modeling to evaluate how withdrawal will affect digester headspace pressures and, if necessary, develop operational schedules that support stable performance. We will work closely with the Jacobs-led facility planning team during design to get future solids loading data and make sure operational impacts are designed with future projects in mind.

Construction Cost Estimating

As design details are added with each submittal, we will refine our cost estimates to support ongoing decision-making. Once final construction plans and specifications are complete, a final construction cost estimate will be developed, covering all divisions of work – from general conditions through site civil, mechanical, building trades, coatings, electrical, and instrumentation and controls.

Permitting

When the design reaches approximately 30% completion and all major equipment and facilities have been identified, we will assess the need for environmental and air quality permitting. Depending on the nature of the proposed facilities, permitting requirements may range from a simple checklist to more complex processes involving public notification/comment period and community meetings. Early identification of permitting needs will help avoid permit-related delays.

Ecology Coordination and Approval

Project review and approval by the Department of Ecology will be required. The addition of mixing and heating to Silo Digester No.3 is not expected to present major challenges for regulatory approval. However, if complications arise, the Jacobs team is well-prepared to work closely with reviewers to secure timely approval. We have a strong track record of collaboration with the regional biosolids coordinators and have built mutual respect and understanding through years of successful project delivery. Recently, Jacobs identified the need for critical digester repairs that had not been included in a previously approved facility plan. Despite this challenge, we worked with Ecology to communicate the issue, obtain fast-track approval, and quickly implement repairs to improve safety.

Task-by-Task Approach Summary

Our approach includes the following top-level tasks, which are described in greater detail in Section B:

1. **Project initiation and kick-off**, which will confirm the purpose and objectives of this project and will include the kick-off meeting, site walk-through with the team, and review of existing plans and other information.
2. **Technology evaluation and decision workshop**, during which we will confirm design criteria and work through key considerations to support the City in decision-making to select preferred technology for the heating and mixing systems. This will establish the basis for design.
3. **Prepare the Basis of Design Report** (BODR), which establishes what our team is setting out to design, gives City staff an opportunity for early input on what they like and what they don't like, and will include the list of permits (for example, building permit and electrical trade permit) that will be needed for the project and a timeline for how they will be obtained. Our proposed decision workshop with the City's team will inform the BODR. Review and approval of the BODR by Ecology is also a critical milestone to achieve project approval.

   During the BODR/30% phase of design, the need for environmental permitting, such as a shoreline permit, will be assessed and the process will commence as required. The need for an NOC from SRCA will also be assessed to make sure the selected equipment meets emissions requirements.

4. **30%/60%/90%/final design/estimate**, which will include reviews by the City at each milestone, supported by cost estimates, constructability reviews, and workshops to help expedite resolution of comments and issues.
5. **Bidding support**, which involves supporting the City with addressing questions from contractors and issuing addenda as needed.
6. **Services during construction** (SDC), which involve responding to contractor requests for information (RFIs) and other construction phase support.

B. Work Plan

Our work plan is presented in the table below, and is designed to leverage prior work, maintain safe and continuous operations of the RPWRF, and reduce cost. Scope items from the City's RFQu are in **bold**.

Task 1 – Project Initiation, Kick-Off, and Project Management	
Outcomes	▪ Confirmation of project outcomes and goals ▪ Understanding of roles and responsibilities ▪ On-schedule and on-budget delivery of the project
Deliverables	▪ Kick-off meeting PowerPoint presentation and meeting summary ▪ Monthly invoice packages ▪ Project Management Plan (PMP) ▪ Issues / Decisions Log ▪ Project schedule and regular updates
Project Manager	Greta will: ▪ **Coordinate/facilitate the kick-off meeting with the City's Project Manager and other staff** ▪ **Coordinate the walking tour of the building/site with the City's Project Manager** ▪ Prepare the PMP and overall project schedule ▪ Prepare and manage project schedule ▪ Develop and update issues / decisions log ▪ Review monthly invoice package (prepared by Project Accountant) ▪ Facilitate regular internal and City coordination meetings
Project Principal	Craig will review and provide input on the PMP
Quality Manager	Kristen will prepare Quality Management Plan (QMP) and review and provide input on the PMP
Design Manager	Katie will: ▪ **Participate in the kick-off meeting and walking tour** ▪ Compile historical plans, photographs and other information, and distribute them to the appropriate team members for review ▪ Review and provide input on the PMP
Task/Discipline Leads	Discipline Leads will: ▪ **Participate in the kick-off meeting and walking tour** ▪ **Review historical plans, operations information and data, affected utility and operational services, and photos** ▪ Review and provide input on the PMP
Task 2 – Technology Evaluation and Decision Workshop	
Outcomes	Confirms preferred solution for new mixing and heating technologies
Deliverables	▪ Technical Memos (TMs) discussing pros/cons of mixing and heating technologies for Silo Digester No.3 ▪ Workshop with the City attended by Jacobs' Subject Matter Experts (SMEs)
Project Manager	Greta will: ▪ Coordinate and facilitate the workshop ▪ Coordinate Class 5 cost estimating as needed to facilitate decision making

Project Principal	Craig will confirm that the City is seeing the engagement and delivery they have come to rely on throughout the delivery of the project
Quality Manager	Kristen will lead the quality assurance/quality control (QA/QC) process for the TMs
Design Manager	Katie will coordinate and monitor the design team members to meet the overall project and QA/QC schedule
Task/Discipline Leads	Discipline Leads Cameron Clark, Nate Ebbs, and Jeff Moss will: ▪ Prepare the TMs for review and comment by the City ▪ Prepare workshop materials and attend the workshop
Task 3 – Basis of Design Report	
Outcomes	Confirms what the team is setting out to design and confirms City buy-in on design
Deliverables	Draft and final BODR report
Project Manager	Greta will lead and coordinate the preparation of the BODR
Project Principal	Craig will engage on an as-needed basis to resolve issues
Quality Manager	Kristen will lead and oversee the QA/QC process for the BODR
Design Manager	Katie will support the development of content of the BODR, assisting Discipline Leads
Task/Discipline Leads	Discipline Leads will: ▪ Develop content for the BODR for their respective disciplines ▪ **Identify permitting requirements and develop a timeline for obtaining needed permits**
Task 4 – 30%/60%/90%/Final Design/Estimate	
Outcomes	▪ Increasingly detailed designs and estimates with City input incorporated at each milestone ▪ Ecology-approved project documents ready for bid
Deliverables	30%, 60%, 90%, and final design plans and specifications and cost estimates
Project Manager	Greta will: ▪ Oversee design development ▪ Primary point of contact with the City ▪ Manage scope, schedule, and budget ▪ Issues and change management ▪ Facilitate milestone reviews with the City ▪ **Coordinate closely with RPWRF staff on impacts and needed modifications for materials storage area, contractor work area, and plant operational impacts** ▪ **Coordinate between City staff and Jacobs' construction SMEs to address construction phasing to allow for continuous plant operations during the rehabilitation work and address site conditions that may impact constructability** ▪ **Coordinate with the City during design to identify and design for impacts to water, sewer, electrical, gas, stormwater, and other onsite utilities**
Project Principal	Craig will: ▪ Conduct periodic check-ins with the City to gather feedback ▪ Engage with the team as needed to resolve issues ▪ Secure consistent staffing of the consultant team
Quality Manager	Kristen will lead and implement the QA/QC process, including continuous and milestone reviews
Design Manager	Katie will: ▪ Coordinate design work of the various disciplines for a cohesive and consistent design ▪ **Assemble design packages at milestones (30%/60%/90%/final PS&E), preparing for bidding** ▪ Support cost estimating and the permitting process as applicable
Task/Discipline Leads	Discipline Leads will: ▪ Lead the design of their respective disciplines

	▪ **Nicole (Permitting Lead) will prepare, submit, monitor, amend as necessary, and complete required permitting** ▪ **John (Civil & Utilities Lead) will identify and design for impacts to water, sewer, gas, stormwater and other onsite utilities** ▪ **Ryan (Electrical Lead) will identify and design for impacts to electrical utilities** ▪ Jacobs' cost estimating professionals will apply their expertise, along with a vast Jacobs' database of construction costs for all divisions of construction work, to update estimates for each design submittal ▪ Jacobs' construction professionals will advise on construction phasing and constructability
Task 5 – Bidding Support	
Outcomes	Awarded construction contract
Deliverables	▪ Contractor question responses ▪ Bid addendums ▪ Review of contractor bids against contract requirements
Project Manager	Greta will: ▪ Oversee bidding support ▪ Primary point of contact with the City ▪ Manage scope and budget ▪ Issues and change management ▪ **Review contractor bid results against contract requirements**
Project Principal	Craig will: ▪ Conduct periodic check-ins with the City to gather feedback ▪ Engage with the team as needed to resolve issues ▪ Secure consistent staffing of the consultant team
Quality Manager	Kristen will lead and implement the QA/QC process as needed during bidding
Design Manager	Katie will triage, delegate, and secure completion of support requests during the bidding process
Task/Discipline Leads	**Discipline Leads will assist the City in responding to contractor questions and prepare supporting documents for bid addendums**
Task 6 – Services During Construction	
Outcomes	Constructed upgrades to Silo Digester No.3
Deliverables	Responses to RFIs
Project Manager	Greta will: ▪ Oversee support ▪ Primary point of contact with the City for RFIs, permitting, and related items ▪ Manage scope, schedule, and budget ▪ Issues and change management ▪ **Coordinate closely with RPWRF staff on impacts and needed modifications for materials storage area, contractor work area, and plant operational impacts** ▪ **Monitor to see that permit terms are being met**
Project Principal	Craig will: ▪ Conduct periodic check-ins with the City to gather feedback ▪ Engage with the team as needed to resolve issues ▪ Secure consistent staffing of the consultant team
Quality Manager	Kristen will lead and implement the QA/QC process for RFI responses
Design Manager	Katie will triage, delegate, and secure responses to RFIs
Task/Discipline Leads	**Discipline Leads will assist the City in responding to RFIs during the construction phase**

Schedule

Our preliminary project schedule with completion dates for key elements is presented below.

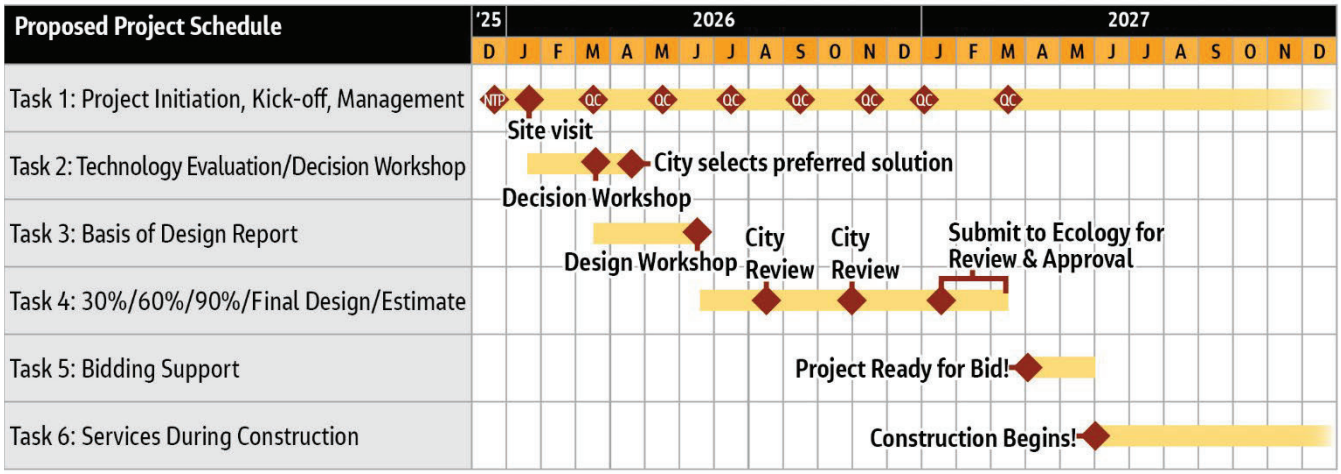

Required Involvement by City Staff

We recognize that City staff have full schedules and plenty of other projects to complete. We also recognize that the City is the long-term owner of this project and needs to have an opportunity to provide input and guidance. Our team's approach strikes a balance between these two considerations by setting up efficient spaces for City input, which includes:

- Submittals of deliverables for City review on their own time, followed by a workshop to gather additional input and confirm the approach to incorporating input.
- Regularly scheduled coordination calls with the City's Project Manager to provide updates on status, address issues, and gather input.
- Informal discussion/correspondence with City staff, based on our strong relationships with City staff built through our experience working at the RPWRF for the past three decades. Some issues are most effectively resolved through a quick phone call – our team knows who to reach out to for input on various questions.

03 | Management Proposal

A. Relevant Project Experience

As a provider of multidiscipline engineering services in the Pacific Northwest, Jacobs has delivered hundreds of projects from preliminary planning studies through design and construction. Our 78-year history of design experience spans hundreds of municipal wastewater facilities. Our Operations Maintenance Facilities Services team operates more than 200 wastewater treatment plants (WWTPs) worldwide, which means our team brings access to an expansive network of practitioners facing similar challenges.

Our relevant experience completing projects with similar scope of services is detailed in the following Management Proposal, including demonstration of how we meet your minimum qualifications.

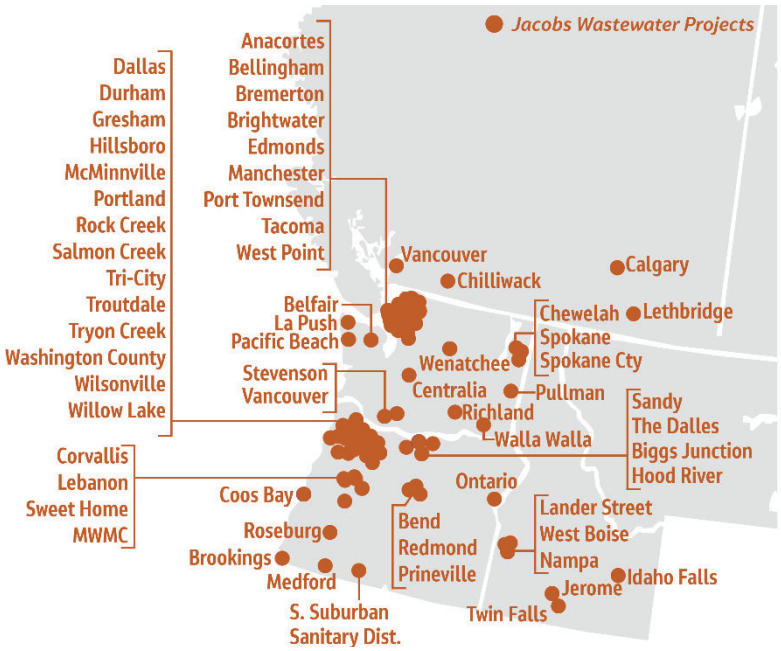

Jacobs serves wastewater treatment agencies across the Northwest, supporting multidiscipline projects from concept to completion.

Minimum Qualifications:

- ☑ **Yes, Jacobs is licensed to do business in the State of Washington**
- ☑ **Yes, we have more than five years of experience (78, in fact!) in mechanical, civil, and structural engineering as well as wastewater treatment.**

Proposed Project Team

The focus of our team is providing you with experienced professionals with the right expertise and qualifications for their respective roles and who also have worked together before and have experience serving the City's RPWRF. Our team's organization chart is presented below, followed by brief qualifications highlights and other requested information for each proposed team member. Resumes are included at the end of our proposal.



Team Assignments, Resources, and Lines of Authority

Project Manager Greta Gilman has the prime responsibility and authority for the work, partnering closely with our Discipline Leads. Project Principal Craig Massie will actively support Greta in driving our team's performance to meet your expectations. This includes allocation of appropriate and sufficient resources. Our team is available, dedicated, and ready to serve you! We have proven our ability to respond quickly, mobilize personnel, and produce quality results within short timeframes on multiple, simultaneous tasks.

How We Proactively Respond to Issues and Project Scope Changes

As with any project, we know that we will face various issues and challenges and will have to manage change. By applying our proactive issue and change management approach, which we've already successfully used on the RPWRF NLT project, we can keep this project running smoothly, even when faced with unexpected challenges. The list below illustrates our overall process for managing issues and change, which will be documented in our Project Management Plan. Reporting of issues and changes to the City will be a part of regularly scheduled coordination calls between Jacobs and the City.

- **Establish baseline**
  - Greta will lead the development of a clear scope of work, establishing a realistic and implementable schedule, and setting up a budget that considers the various risks we may encounter.
- **Identify issues/changes**
  - All team members will be responsible for continual identification of issues and change in their respective disciplines. Regularly scheduled coordination meetings will be one avenue through which change is identified and reported.
- **Evaluate impacts**
  - Greta will facilitate a simple evaluation of the impacts of issues and change on the schedule and budget of the project.
- **Select mitigation**
  - Greta will work with Discipline Leads and City staff to identify what can be done to mitigate the impacts of the issue or change.
- **Document**
  - Greta will lead the documentation of issue and change management into the project change log, which will be shared with the City on a regular basis.
- **Implement**
  - Implementing issue and change management will vary, but could include continued monitoring, scope revisions, change orders, or other types of activities.

Select Jacobs for Focused Delivery with Zero Learning Curve

Leveraging our extensive historical site knowledge, we can accelerate project initiation and coordinate seamlessly with City staff as the work progresses through each milestone. Our team offers the full range of capabilities needed to execute your scope of services efficiently and deliver results that meet – or exceed – your expectations.

Team Member Qualifications Highlights

Greta Gilman, PE | Project Manager

Years of Experience: 36

Availability: 30%

Responsibilities:

- Overall leadership of the team
- Managing scope/schedule/budget
- Leading implementation of the issue and change management process
- Serving as the City's primary point of contact for the project, including kick-off meeting, and facility walking tour facilitation
- Overseeing the team's support during the bidding and construction phase
- Planning construction phasing to allow for continuous plant operation
- Coordinating closely with RPWRF staff on impacts and needed modifications for materials storage area, contractor work areas, and plant operational impacts

Qualifications Highlights:

- Spokane-based project manager and engineer with 36 years of experience in wastewater facility planning, design, and construction administration, including 10 years working on site at the Spokane Advanced Wastewater Treatment Plant (now RPWRF) Project Management Office
- Project manager for numerous multidisciplinary wastewater treatment designs, including anaerobic digester design

Craig Massie, PE | Project Principal

Years of Experience: 39

Availability: 5%

Responsibilities: Craig will be responsible for:

- Making sure our team's performance meets your expectations, including allocation of appropriate and sufficient resources, and supporting issue resolution

Qualifications Highlights:

- Over 39 years of experience delivering wastewater facility improvements across the Northwest
- Project manager for the RPWRF NLT project for the City

Kristen Griebel, PE | Quality Manager

Years of Experience: 22

Availability: 5%

Responsibilities: Kristen will be responsible for:

- Developing and supporting implementation of the project's quality management plan

Qualifications Highlights:

- Project manager and professional engineer with 22 years of experience focused on wastewater facility design and construction oversight
- Nine years of experience working on the City's RPWRF facility, including serving as the design manager and project manager for the NLT project

Katie Webster | Design Manager

Years of Experience: 9

Availability: 25%

Responsibilities: Katie will be responsible for:

- Requesting information from the City, making assignments for review by other team members, and reviewing documents related to the digestion system and related interfaces
- Coordinating the design between disciplines for a comprehensive and cohesive design package

- Coordinating with the City during design to identify impacts to water, sewer, electrical, gas, stormwater, and other onsite utilities
- Triaging, delegating, and securing completion of support requests during the bidding process
- Triaging, delegating, and securing responses to RFIs during the construction phase

Qualifications Highlights:
- Key contributor to the RPWRF NLT project, supporting interdisciplinary design efforts and bringing direct experience with the City, the facility, and project delivery standards
- Strong technical foundation in digester and solids handling systems, with hands-on experience delivering complex wastewater infrastructure projects for municipal clients across the Northwest

Cameron Clark, PE | Digestion Process Lead

Years of Experience: 21

Availability: 10%

Responsibilities: Cameron will be responsible for:
- Leading the selection of a preferred technology, layout, and implementation approach, especially for the process design

Qualifications Highlights:
- Highly experienced environmental engineer with over a decade of specialization in anaerobic digestion and biogas systems, leading the design and optimization of digestion processes for wastewater solids treatment across the U.S.
- His work spans conceptual evaluations through startup, with a strong emphasis on energy-efficient digestion design, operational reliability, and sustainable biogas utilization

Nate Ebbs, PE | Mixing & Heating Lead

Years of Experience: 25

Availability: 15%

Responsibilities: Nate will be responsible for:
- Evaluation of digester mixing and heating technology using a collaborative decision-making process
- Leading discussions with the City to support the selection of a preferred technology, layout, and implementation approach, especially for the piping design
- Guiding the design team in delivering a digester system that supports the City's objectives

Qualifications Highlights:
- Experience designing process mechanical systems across a broad array of digester technologies including mixing/heating systems, anaerobic digesters, membrane bioreactors, gravity belt thickeners, clarifiers, aeration basins, and various pumping systems including sludge pumping
- Contributed to the integration of tube-in-tube heat exchangers for the RPWRF egg-shaped digesters by working with vendors to select the technology and supporting the design process

Jeff Moss, PE | Process Mechanical

Years of Experience: 10

Availability: 50%

Responsibilities: Jeff will be responsible for:
- Detailed process mechanical evaluation and design
- Supporting the selection of preferred technology, including vendor information outreach
- Coordinating plans and specifications to help deliver a clear and complete design package

Qualifications Highlights:
- Leads process mechanical design for anaerobic digester projects, including mixing and heating systems, across all project phases – from conceptual planning through commissioning
- Experience working with Ecology biosolids coordinators to obtain approval for digester projects, including getting temporary waivers of biosolids beneficial reuse rules

Nicole Ogan, CESCL | Permitting Lead

Years of Experience: 16

Availability: 20%

Responsibilities: Nicole will be responsible for:

- Leading the environmental permitting strategy
- Coordinating closely with City staff and Jacobs' engineering team to support State Environmental Review Process (SERP), shoreline permitting, JARPA, or related processes as required

Qualifications Highlights:

- Experience includes environmental assessments and permitting in communities with a variety of projects, ranging from infrastructure maintenance and development to facility construction and stream restoration
- Her collaborative approach and familiarity with Washington's environmental regulations make her a valuable asset in navigating the permitting phase efficiently to maintain project schedule

Sterling Rose, PE, SE | Structural Lead

Years of Experience: 25

Availability: 40%

Responsibilities: Sterling will be responsible for:

- Reviewing historical plans for the site related to the structural design of the building and the vicinity impacted by construction
- Leading structural design
- Supporting the following as it relates to the structural design:
  - Identifying and obtaining applicable permits
  - Supporting the bidding process
  - Assisting the City in responding to RFIs during the construction phase

Qualifications Highlights:

- Experienced structural engineer and designer for building and hydraulic structures for water and wastewater treatment facilities, as well as critical structures in areas of high seismicity
- Brings strong familiarity with your facility, having served as assistant design manager for the RPWRF NLT project for seven years

Ryan Harbert, PE, LEED AP | Electrical Lead

Years of Experience: 23

Availability: 20%

Responsibilities: Ryan will be responsible for:

- Reviewing historical plans for the site related to the electrical infrastructure of the building and the vicinity impacted by construction
- Leading the design of electrical components
- Supporting the following as it relates to the electrical design:
  - Identifying and obtaining applicable permits
  - Supporting the bidding process
  - Assisting the City in responding to RFIs during the construction phase

Qualifications Highlights:

- Extensive electrical engineering experience for a variety of buildings, process facilities, public spaces, and water and wastewater treatment plants
- Serves as Jacobs' technology leader in sustainable power systems and is certified with the North American Board of Certified Energy Practitioners

John Quinn, PE | Civil & Utilities Lead

Years of Experience: 9

Availability: 20%

Responsibilities: John will be responsible for:

- Reviewing historical plans for the site related to the utilities of the building and the vicinity impacted by construction
- Leading the design of civil and utility components
- Supporting the following as it relates to the civil and utility design:
  - Identifying and obtaining applicable permits
  - Supporting the bidding process
  - Assisting the City in responding to RFIs during the construction phase

Qualifications Highlights:

- Currently serving as the site civil lead for the City of Wenatchee Administration Building and Public Service Center Garage Design
- Extensive experience supporting the City on major water and wastewater infrastructure projects, with deep familiarity with the City's utility standards and coordination protocols

Craig Vanhorn, PE, AMPP | Corrosion Engineer

Years of Experience: 15

Availability: 10%

Responsibilities: Craig will be responsible for:

- Reviewing existing facility and proposed mixing and heating systems for corrosion considerations
- Reviewing structural and material specifications to identify and mitigate corrosion risks

Qualifications Highlights:

- One of Jacobs' most senior corrosion engineers, with deep expertise in identifying and mitigating corrosion risks in digester systems – including SFPUC's Biosolids Digester Facilities Project
- Experience in corrosion condition assessment, material selection, coating selection and inspection, metallurgical analysis, failure analysis, nondestructive evaluation, and cathodic protection design, installation and inspection

B. Firm Qualifications

Demonstrated Experience Serving the City's Riverside Park Water Reclamation Facility



Since the early 1990s, Jacobs has served the City at the RPWRF, leading numerous planning, design, and construction projects to upgrade and improve the facility and many have been delivered by several of the same proposed team members. Our team has worked on almost every component of the RPWRF, from the headworks to the outfall, and all the support facilities in between. This experience means that our team is not only incredibly efficient, but we have an in-depth knowledge of how the facility operates and have a demonstrated track-record of being able to keep the RPWRF fully operational while improvements are being constructed. Our team members will leverage the following experiences at the RPWRF to directly benefit efficiency and quality for the project at hand.

Program Manager for the RPWRF Upgrade Program. Jacobs was responsible for performing all planning, preliminary, and final designs, and managing construction activities. The overall goal of the Program Management Office (PMO) was to support completion of the RPWRF improvements within the City's established budget and time frame, while simultaneously maintaining continuous, ongoing operation of the plant. As part of the PMO, Greta served first as a project engineer and later as quality manager leading the QA/QC program related to conceptual design, pre-design, and design services.

The program has been described as the functional equivalent of "overhauling the engine of a car while driving it down the freeway at 70 miles per hour." The plant remained fully operational during multiple construction projects. In addition, Jacobs assisted in successfully negotiating plant discharge parameters with Washington State Department of Ecology that led to an acceptable new National Pollutant Discharge Elimination System (NPDES) permit.

RPWRF NLT Project. Craig Massie, Kristen Griebel, Sterling Rose, and Katie Webster all worked closely with City staff through planning, design, construction, and commissioning of this large project and related facility improvements. This work involved design and installation of a new primary clarifier, upgrade to the chemically enhanced primary treatment system, modifications to existing aeration basins, adding a tertiary filtration system, a complete overhaul of the facility's SCADA system, and other site improvements. Our team's experience on this project demonstrates our in-depth knowledge and understanding of the RPWRF and our ability to deliver high-quality, on-budget, and on-schedule projects.

List of Contracts to Demonstrate Jacobs' Ability to Perform the Needed Services

In addition to our experience serving the City's RPWRF, summarized next is our select list of relevant contracts from within the past three years that demonstrate our ability to perform the services needed under your RFQu.

Project, Client	Contract Period	Contact Info	Digester Improvements	Mixing and/or Heating Technology	Multidiscipline Engineering & Design	Maintained Plant Operations	Coordination with WWTP Staff	Mitigated Utility/ Site Impacts	Permitting Support
Wenatchee WWTP Digester Upgrades and Boiler/Heat Exchanger Design City of Wenatchee, WA	2024-Ongoing	Mike Hodgson, 509.888.3238, mhodgson@wenatcheewa.gov	✓	✓	✓	✓	✓	✓	✓
Tri-City WRRF Solids Handling & Primary Clarifier Rehab Clackamas County, OR	2018-2025	Jeff Stallard, 503.278.2311, JStallard@clackamas.us	✓	✓	✓	✓	✓	✓	✓
Lander Street WRF Ph. 1 & 2 City of Boise, ID	2017-Ongoing	Josh Baker, 760.920.0372, jcbaker@cityofboise.org	✓	✓	✓	✓	✓	✓	✓
Tracy WWTP Phase 2B Expansion Project City of Tracy, CA	2018-2025	Aloke Vaid, 209.831.6328, aloke.vaid@cityoftracy.org	✓	✓	✓	✓	✓	✓	✓
Five New Digesters for Southeast Water Pollution Control Plant SFPUC, CA	2013-Ongoing	Rosanna Tse, 650.219.4863, rtse@sfwater.org	✓	✓	✓	✓	✓	✓	✓
Durham AWWTF Digesters Heating and Mixing Clean Water Services, OR	2023-2025	Mike Idehara, 503.547.8152, IdeharaM@CleanWaterServices.org	✓	✓	✓	✓	✓	✓	✓

Three Specific References with Work Descriptions

Next, we present our three specific references from the previous list, including brief work descriptions.

#1 Wenatchee WWTP Digester Upgrades and Boiler/Heat Exchanger Design, City of Wenatchee, Washington

Key elements:

- Retrofit within an operational plant
- New primary and waste activated sludge blend tank to increase capacity of the solids handling system
- Upgrades to heating system for three anaerobic digesters including a new boiler and new heat exchanger
- Gas conditioning evaluation
- Upgrades to polymer and odor control systems

Team members involved: Greta Gilman, Nate Ebbs



The Wenatchee WWTP continues to be a good neighbor to the adjacent city park, regional trail loop, and the community.

With a multidisciplinary team led by Greta, the early stages of this design project included solids process modeling, structural evaluations and equipment evaluations to narrow the design scope for digester system upgrades at the Wenatchee WWTP. Process modeling demonstrated that adding a blend tank upstream of the rotary screen thickeners would improve operational flexibility and increase the capacity of the digesters. The scope of the final project, which is in the schematic design phase, includes the recommended blend tank, in-kind replacement of the existing 3.5 mbtu/hour boiler, an additional heat exchanger to provide redundant sludge heating for all heated digesters, and replacing the existing polymer system with two new automated dry polymer systems (one for thickening and one for dewatering). Future phases of this project involve replacing mixing systems for two of the four digesters.

This project included structural evaluation of existing digesters built in the 1950s and 1990s to determine if they can support linear motion mixing and meet current seismic code.

#2 Tri-City Water Resource Recovery Facility Solids Handling Improvements and Primary Clarifier Rehabilitation, Clackamas County Water Environment Services, Oregon City, Oregon

Key elements:

- Retrofit within an operational plant
- New digester with pumped mixing system; improvements to existing digester mixing systems
- Accommodated space constraints and relocations
- Phased construction to maintain facility operations

Team members involved: Nate Ebbs, Cameron Clark, Ryan Harbert, Katie Webster



The Jacobs team incorporated cost-effective solutions into this digester retrofit design to meet space code requirements. This $33M project involved the design and construction of a new 1.3-MG mesophilic digester with a fixed concrete cover (designed for future thermophilic operation) and pumped mixing system, along with upgrades to two 1-MG mesophilic digesters.

Design scope included the digester feed tank, digested sludge storage tank, two centrifuges, biosolids handling facility, boiler plant, digester gas treatment system, external low-pressure digester gas storage, and a 600-kilowatt (kW) cogeneration engine. Jacobs designed improvements to the existing digesters' pumped mixing systems, made substantial control system modifications, and replaced sludge piping and valves.

The district was satisfied with the performance of the existing Vaughan Rotamix® system in Digesters 1 and 2, so new Digester 3 continued with this technology. Jacobs identified NFPA space classification concerns with the existing mixing system installation in the abandoned ground-floor gas compressor rooms. The team designed a relocation of the mixing system for Digesters 1 and 2 to the basement level and specified refurbishment of the existing Vaughan pumps.

To promote competition, we developed a bidding approach that allowed other vendors to propose rehabilitation solutions. The winning bidder ultimately provided new pumps instead of retrofitting the existing system for Digesters 1 and 2. Jacobs developed performance-specified computational fluid dynamics modeling to demonstrate performance of the new system in Digesters 1, 2 and 3. In addition to designing a replacement 600 KW combined heat and power cogeneration system, Jacobs designed three hot water boilers and supply/return piping integrated into the existing hot water system. The heating system was also tied into space heating for occupied office and shop areas.

The construction schedule was phased to maintain facility operations. The project also included performance enhancements such as surface overflows, scum suppression nozzles, nitrogen purge points, inspection viewports, improved gas safety equipment, and radar-level transmitters. Jacobs delivered this work on time and under budget.

Following completion, the client asked our team to put the budget surplus to good use by implementing design of recommendations identified in a primary clarifier condition assessment performed by Jacobs. Construction of this $14M project spanned the 2023-2025 dry seasons. We designed a bid package for rehabilitation of six primary clarifiers, replacing mechanisms and scum skimmers, SCADA integration of the new equipment, improving ventilation to satisfy NFPA 820 criteria in the clarifier building, and performing substantial concrete rehabilitation. The concrete rehabilitation included high pressure hydro blasting of existing concrete and high strength mortar repair. The project successfully has restored condition of the primary clarifiers, extending the life of the facility.

#3 Lander Street WRF Phases 1 and 2, City of Boise, Idaho

Key elements:

- Retrofit within an operational plant
- New digester pump and nozzle mixing system
- New digester spiral heat exchanger, recirculation pump, and hot water pump
- Piping and valve upgrades to convert existing tank into a primary digester
- New and replaced safety equipment



Team members involved: Jeff Moss, Cameron Clark, Nate Ebbs, Kristen Griebel, Katie Webster

The city turned to Jacobs to design a major two-phase program to increase plant capacity to 17 mgd while meeting new compliance requirements. This project includes numerous improvements to the site and collection system that will result in a substantial increase in solids over the next 5 years.

Jacobs identified a capacity constraint with the existing digesters and recommended converting the plants' digested sludge storage tank to a primary digester.

Extensive modifications of the tank are needed to support the conversion, including a new cover, mixing system, heat exchange and recirculation system, overflow piping and withdrawal piping. Jacobs worked with the city to review equipment options and limitations and selected a pumped mixing system and spiral heat exchanger, which will be installed in a building addition to the existing digester control building. The facility will normally operate as a secondary digester, so the city elected not to include a standby mixing pump to save space and cost.

This project has required careful analysis of digester capacity and dewatering process requirements to confirm the city can operate both processes smoothly. Limitations with the existing sludge feed and withdrawal systems meant that pipe modifications and new control valves were needed not only at the converted digester but also for the existing primary digesters. We also made substantial improvements to the process controls and SCADA network resiliency. Jacobs collaborated with the client to understand current operations and develop new controls approaches to simplify and improve operator controls.

C. Performance

Jacobs Engineering Group Inc. (Jacobs) and its related companies and affiliates form a global organization that has the technical, financial, and professional qualifications and resources to perform the solicited services. Jacobs provides a full spectrum of services including scientific, technical, professional, construction, and program management for business, industrial, commercial, government, and infrastructure sectors. From time to time and in the ordinary course of its business, Jacobs is subject to various claims, disputes, terminations, arbitrations, and other legal proceedings. It is Jacobs' practice to defend itself in such actions, many of which are generally subject to insurance and none of which are expected to have a materially adverse effect on Jacobs' consolidated financial statements. No such litigation is expected to have any impact on Jacobs' potential ability to perform the proposed contract. No termination for default has been experienced by Jacobs in the past five (5) years.

RESUMES

Table of Contents

- Greta Gilman, PE | Project Manager
- Kristen Griebel, PE | Quality Manager
- Craig Massie, PE | Project Principal
- Katie Webster | Design Manager
- Cameron Clark, PE | Digestion Process Lead
- Nate Ebbs, PE | Mixing & Heating Lead
- Jeff Moss, PE | Process Mechanical
- Sterling Rose, PE, SE | Structural Lead
- John Quinn, PE | Civil & Utilities Lead
- Nicole Ogan | Permitting Lead
- Ryan Harbert, PE, LEED AP | Electrical Lead
- Craig Vanhorn PE, AMPP | Corrosion Engineer

Greta Gilman, PE | Project Manager

As a project manager based in Jacobs' Spokane office for 30 years, Greta has made a profession of bringing Jacobs' consulting and design resources to client wastewater and water projects. In addition to project and quality management, Greta's experience includes facilities planning, engineering reports, conceptual and detailed design, construction, agency coordination, and environmental permitting. Greta also serves as local quality manager, supporting project managers in achieving quality goals at the local level and assisting with project startup requirements and client expectation surveys. Greta will collaborate with Kristen to make sure that Jacobs' and the City's quality expectations are met for every deliverable produced by our team.

Education

MS, Environmental Engineering, Montana State University

BS, Civil Engineering, Stanford University

Basic Certificate in Public Management Development, Eastern Washington University

Licenses/Certifications

Professional Engineer: WA #26929; ID #P-13005; MT #PEL-PE-LIC-91649

Relevant Experience

WWTP Digester and Boiler/Heat Exchanger Improvements, City of Wenatchee, WA

Project Manager. Greta is managing design for improvements to the anaerobic digestion facility, which includes four digesters of various ages and conditions, three buildings, and a gas flare. The improvements include a replacement boiler, a new heat exchanger, a thickened sludge mixing tank, and a digester gas conditioning facility. Early phases of the project included a structural evaluation of Digesters No.1 and 3 for ability to handle linear mixing and meet modern seismic requirements, evaluations boiler/HEX sizing, and a process model to confirm the digestion system is properly sized for a 20-year planning period. The project is currently at the 30% design stage.

WWTP Administration and Public Works Buildings Expansion, City of Wenatchee, WA

Project Manager. Greta is managing design of a new administration building that will house WWTP operators, a laboratory technician, maintenance technicians, a pretreatment technician, and a supervisor. Functional spaces include offices/work areas and a conference room; a laboratory; break room with full kitchen; men's and women's shower and locker rooms with ample storage for personal belongings and PPE; storage room(s); and a control room. The project is currently at the 100% design stage.

Wastewater Treatment Alternatives Study and Preliminary Engineering Report (PER), Flathead County Water District No. 1 – Evergreen, MT

Project Manager. Greta currently serves as project manager for this study that includes establishing a basis of planning; determining the feasibility of obtaining an MPDES permit for surface water or groundwater discharge or reuse; developing treated effluent reuse, disposal, and discharge strategies; evaluating collection system and treatment alternatives; siting a treatment facility; evaluating partnerships and financial strategies; and completing a PER meeting funding agency requirements.

2025 WWTP Facilities Plan Amendment, City of Wenatchee, WA

Project Manager. Greta is managing an update to the previous facilities plan amendment, also prepared by Jacobs, to include updated flow projections and verify compliance in future permit; updated Water Quality Standards for Surface Waters of the State of Washington (2019); summarize opportunities for Resource Recovery Planning at the WWTP; and update the City's Capital Improvement list.

WWTP RAS Valve Replacement, City of Missoula, MT

Project Manager. Greta managed the design and construction of this work that involves replacing 26 return activated sludge (RAS) valves at the WWTP without taking the RAS system out of service. This project meets the requirements of the Montana Water Pollution Control State Revolving Fund Loan Program.

City of Wenatchee WWTP Blower Building City of Wenatchee, WA

Project Manager. This project included design and construction services for demolishing two existing blowers and replacing with two new 200 hp High Speed Turbo (HST) blowers, and related electrical, controls and piping modifications. Other work includes adding instrumentation and valving to the plant water system, and installation of two vertical slide gates and actuators at the aeration basin effluent splitter box. Prior to design Jacobs worked with the city on an evaluation of blower types, based on energy consumption and other variables.

Spokane Riverside Park Water Reclamation Facility Biosolids Incineration Feasibility Study, City of Spokane, WA

Project Manager. For a different employer, Greta managed a study to determine if incinerating biosolids at the City's waste to energy facility makes more economic and environmental sense than applying it to agricultural fields.

Walla Walla Mill Creek WTP LT2 Improvements, City of Walla Walla, WA

Representative During Construction and Project Manager. For a different employer, Greta served as project manager and engineering representative during construction of this $15M water treatment plant (WTP) upgrade.

Spokane Falls Combined Sewer Overflow 26 Control Facility Final Design, City of Spokane, WA

Project Manager. For a different employer, Greta served as project manager for engineering report, collection system modeling, and design of a 2.2-million-gallon (MG) control facility on a challenging site in an urban area. This facility included a major control chamber, a 1,600-gpm dry pit pump station, significant architectural amenities, and large-diameter conveyance piping.

Riverside Park Water Reclamation Facility Program Management Office, City of Spokane, WA

Quality Manager. Greta led the QA/QC Program related to conceptual design, pre-design, and design services for a number of major capital improvements at the RPWRF, applying lessons learned from the first phase of work to keep the City regularly informed and address issues early in the design process.

Kristen Griebel, PE | Quality Manager

Kristen is a project manager and process mechanical engineer with 22 years of experience delivering municipal wastewater treatment plant projects. Her experience includes serving as a design manager, assistant design manager, quality control manager, services during construction manager, process engineer and facility lead engineer for water and wastewater treatment systems. She is skilled in collaborating with multidiscipline design teams, owners, and contractors to keep projects on time, within budget, and that achieve the client's quality expectations.

Education

BS, Environmental Engineering, Oregon State University

MEng, Chemical Engineering, Oregon State University

Licenses/Certifications

Professional Civil Engineer: AZ #52392

Relevant Experience

RPWRF Process Building Exterior Modifications, City of Spokane, WA

Project Manager. Kristen is managing a multidiscipline team for the RPWRF process building exterior rehabilitation and improvement design project.

Riverside Park Water Reclamation Facility NLT, City of Spokane, WA

Design Manager/Project Manager. Kristen served as the design manager for the RPWRF NLT during the planning and design phase, and as the project manager during the construction phase. This $212M project was delivered on schedule and within budget. She has built strong professional relationships with City staff, understands City processes and preferences, and has worked closely with the technical team being proposed for this project.

Lander Street Water Renewal Facility Phase 2, 3 and 4 Improvements, City of Boise, ID

Quality Manager. The City of Boise is underway on a series of major upgrades at the Lander Street WRF that will increase the solids loading on the plant and needs additional anaerobic digester capacity. Kristen was responsible for design quality management for Phases 2, 3 and 4. She ensured that appropriate reviewers were assigned and reviews were completed, as well as coordinated engineering team responses to QC comments.

Donald C. Tillman Advanced Water Purification Facility; Los Angeles Bureau of Sanitation, CA

Design Manager. Responsible for management of interdisciplinary design team, including multiple subcontractors and coordination with construction team and plant operations staff for this $500M Advanced Water Purification Facility Design Build project.

Columbia Boulevard WWTP Secondary Treatment Expansion Program, Portland, OR

Design Manager. Responsible for management of interdisciplinary design team, including multiple subcontractors, for the $315M secondary treatment expansion of this critical facility.

WRF Design-Build-Operate, Pima County Regional Wastewater Reclamation Dept., AZ

Assistant Design Manager, Facility Lead, and Services During Construction Manager. Assisted in management of an interdisciplinary design team for a greenfield tertiary treatment facility. During design, she was responsible for design of tertiary filtration facility, disinfection facility and chemical feed and storage facility. She also managed our team's support services during construction.

Craig Massie, PE | Project Principal

Craig is a senior project manager in Jacobs's People and Places Solutions Group in Corvallis, Oregon. His background encompasses municipal and industrial planning, design, construction, project and program management experience involving water and wastewater treatment, biosolids processing, pumping, piping, valves, materials handling. Craig is skilled at delivering technical project information to non-technical audiences such as city councils, commissions, and resource agencies as well as in public information setting.

Education

BS, Mechanical Engineering, Washington State University

Licenses/Certifications

Professional Engineer: WA #31685

Relevant Experience

Riverside Park Water Reclamation Facility NLT, City of Spokane, WA

Project Manager. Managed the design of the $160M program to achieve the next level of treatment at the Spokane Riverside Park Water Reclamation Facility. Assisted the City with selection of two membrane vendors for extended piloting to be followed by competitive selection of the membrane vendor. Assisted the City in evaluation of project delivery options and selection of the construction manager/general contractor (CM/GC) delivery approach. Participated in the CM/GC delivery authorization required by the State of Washington, the selection of the CM/GC and value engineering/constructability reviews with the owner, engineer, and CM/GC during the design phase. Improvements include additional primary clarification, aeration basin improvements, chemical feed system improvements, secondary clarification improvements in addition to the 50 mgd nominal capacity microfiltration membranes.

RPWRF Process Building Exterior Modifications, City of Spokane, WA

Project Principal and Quality Manager. Craig is supporting this multidiscipline effort for the RPWRF process building exterior rehabilitation and improvement design project and overseeing the project quality control reviews at all milestones.

Durham WRRF Projects, Clean Water services, OR

Project Manager and Quality Manager, Durham AWTP UFAT Improvements. Managed the design and construction phase services for the $12.2 million project to upgrade the Unified Fermentation and Thickening (UFAT) process associated with Clean Water Service's nutrient removal and recover program at the Durham AWTP. Project included refurbishment of four gravity thickeners/fermenters, piping, pumping, and odor control.

Project Manager and Quality Manager, Durham AWTP Phase 6b Digester. Managed the design and construction phase services for the $15 million project to add a third digester to Digester Complex 2 at the Durham AWTP. Project included modification to the Fat Oil and Grease handling facility, digester gas system and related modifications in the solids handling facility.

Katie Webster | Design Manager

Katie brings a well-rounded background in water and wastewater infrastructure, with nine years of experience supporting the planning, design, and delivery of treatment systems and water resources projects. Katie is known for her ability to lead multi-disciplinary teams, contribute across project phases, and support both traditional and design-build delivery models. Her collaborative approach and technical versatility make her a valuable asset to clients seeking dependable project execution and quality outcomes.

Education

BS, Civil Engineering, Oregon State University

Licenses/Certifications

N/A

Relevant Experience

Riverside Park Water Reclamation Facility NLT Phase 2, City of Spokane, WA

Assistant Design Manager, Assistant Quality Control Manager, Lead Civil Engineer. Assisted in managing an interdisciplinary design team for the $212M tertiary treatment upgrade and expansion to an existing wastewater treatment facility. Site work included locating facilities, access roadways, utility piping, grading, stormwater management, and riverbank protection.

Lander Street Water Renewal Facility Phase 2, Digested Sludge Storage Tank Conversion Improvements, City of Boise, ID, City of Boise, ID

Project Support. Jacobs is designing rehabilitation improvements to the existing digested sludge storage tank to allow it to function as an anaerobic digester. Katie supported our multidiscipline team with a variety of tasks during peak delivery milestones.

Tri-City Water Resource Recovery Facility Solids Handling Improvements and Primary Clarifier Rehabilitation, Clackamas County Water Environment Services, OR

Quality Control Manager. Managed the quality review process during design of the replacement and upgrade to existing clarifier structures, drive mechanisms and appurtenances.

Marine Park Water Reclamation Facility Aeration Basin Improvements, City of Vancouver, OR

Design Manager. Responsible for management of an interdisciplinary design team providing upgrades to existing aeration basins to improve the functionality, enhance operational flexibility, maximize treatment capacity, and refine the control system logic to improve efficiency.

South Rim Village WWTP Replacement, National Parks, Grand Canyon National Park, AZ

Design Manager. Responsible for managing an interdisciplinary design team for the replacement of an existing wastewater treatment plant. The project scope included the design of a mile-long construction access road to divert construction traffic away from the park, minimizing environmental and community impact.

Ashland WWTP Outfall Relocation, City of Ashland, OR

Quality Control Manager. Managed the quality review process during design and supported the management of design change orders throughout construction services. The project involved relocating an existing outfall to meet updated water quality regulations concerning mixing zones, temperature, and toxic substances.

Cameron Clark, PE | Digestion Process Lead

Cameron is a global leader in wastewater solids treatment and biogas utilization. He has over 20 years of experience in wastewater treatment plant evaluation, design, research, and operation. He provides tailored, innovative solutions for complex challenges with thickening, anaerobic digestion, dewatering, nutrient recovery, biogas utilization, biosolids use, and microconstituents. Cameron is well informed on current and future regulatory issues and trends that may impact biosolids management strategies.

Education

MSE, Civil Engineering, University of Washington

BS, Environmental Engineering, Montana Tech

Licenses/Certifications

Professional Engineer: WA #49936

Relevant Experience

Spokane County Regional Water Reclamation Facility, Spokane County, WA

Project Engineer. The facility struggled with grit accumulation in their digesters due to extensive chemically enhanced primary clarification using iron salts. The existing digester mixing system and digester withdrawal configuration was insufficient to transfer grit out of the digester and remove it from the process. Cameron provided troubleshooting for the system, developing a new digester mixing and withdrawal configuration that eased the issues for minimal cost.

Lander Street Water Renewal Facility Phase 2, Digested Sludge Storage Tank Conversion Improvements, City of Boise, ID

Digestion Subject Matter Expert. The City of Boise is underway on a series of major upgrades at the Lander Street WRF that will increase the solids loading on the plant and needs additional anaerobic digester capacity. Jacobs is designing rehabilitation improvements to the existing digested sludge storage tank to allow it to function as an anaerobic digester. This project has required careful analysis of digester capacity and dewatering process requirements to confirm the City can operate both processes smoothly. The new pump, piping, valves, and control systems will be constructed in an existing building with a new room addition to maximize the value of existing structures.

Tri-City Water Resource Recovery Facility Solids Handling Improvements and Primary Clarifier Rehabilitation, Clackamas County Water Environment Services, OR

Project Engineer and Facility Lead. Cameron designed a new 1.3-MG digester, two digester feed tanks, and upgrades to two existing 1.0-MG digesters. All digesters were outfitted with high performance digester features, such as upgraded pumped mixing systems, surface overflow withdrawal mechanisms, and emergency pressure relief hatches. He also provided engineering services during construction.

Post Point WWTP Biosolids Planning, City of Bellingham, WA

Design Manager. The city was facing severe maintenance concerns with the existing multiple hearth furnaces reaching the end of their service life while also facing stricter regulations on the air emissions. It was identified that the furnaces needed to be replaced with anaerobic digestion. Cameron oversaw the 30% design of new biosolids processing facilities, including new thickening, dewatering, polymer, and cake loadout facilities to accompany the new temperature-phased anaerobic digestion process with thermophilic batch tanks capable of producing US EPA Class A biosolids.

Planning Analysis for the West Point Treatment Plant Digestion Capacity, King County, WA

Project Engineer. Cameron provided planning and related services to develop, evaluate, and recommend alternatives to address solids treatment capacity constraints at the plant. The recommended solution was converting the existing mesophilic digesters to a temperature-phased anaerobic digestion system with batch tanks to achieve Class A biosolids.

Nate Ebbs, PE | Mixing & Heating Lead

Nate specializes in process mechanical design for mixing and heating systems, cogeneration systems, sludge and water pumping systems, membrane bioreactors, gravity belt thickeners, dewatering centrifuges, blower/aeration systems, anaerobic digesters, polymer and other chemical feed systems, odor control systems, and other various mechanical systems. He also contributed to the integration of tube-in-tube heat exchangers for the RPWRF egg-shaped digesters by working with vendors to select the technology and supporting the design.

Education

BS, Mechanical Engineering, South Dakota State University

Licenses/Certifications

Professional Engineer: WA #56474

Relevant Experience

Lander Street Water Renewal Facility Phase 2 Improvements, City of Boise, ID

Lead Mechanical Engineer and RAS Pump Station Lead. Nate is responsible for coordinating plant-wide mechanical standards including piping, valves, and pumps for plant upgrade project including primary clarifier addition, aeration basin modifications, secondary clarifier additions and modifications, and solids handling facilities. Responsible for mechanical design, facility layout, and coordination of all engineering disciplines to complete design of new RAS pump stations. Provided engineering guidance to other facility leads and junior mechanical engineers. Coordinated team of process mechanical engineers from design center in Krakow, Poland to complete design.

WWTP Digester and Boiler/Heat Exchanger Improvements, City of Wenatchee, WA

Mechanical Engineer. Jacobs is managing design for improvements to the anaerobic digestion facility, which includes four digesters of various ages and conditions, three buildings, and a gas flare. The improvements include a replacement boiler, a new heat exchanger, a primary/secondary sludge mixing tank, and a digester gas conditioning facility. Early phases of the project included a structural evaluation of Digester Nos. 1 and 3 for ability to handle linear mixing and meet modern seismic requirements, evaluations boiler/HEX sizing, and a process model to confirm the digestion system is properly sized for a 20-year planning period. Nate is leading the process mechanical engineers through the preliminary design of the current improvements.

Tri-City Water Resource Recovery Facility Solids Handling Improvements and Primary Clarifier Rehabilitation, Clackamas County Water Environment Services, OR

Lead Mechanical Engineer. Nate coordinated plant-wide mechanical standards, including piping, valves, and pumps. Improvements include rehabilitation of original digesters, with new digesters, thickening equipment, dewatering equipment, truck loading facilities, and cogeneration systems. Mixing for the new digester was accomplished through a pumped mix system using chopper pumps. Heating for the new and existing digesters was provided by a new heating water system consisting of new boilers, spiral heat exchangers, and pumping.

Cogeneration Design-Build Project, Santa Clara Regional Wastewater Facility, CA

Startup Manager. Coordinated startup activities for a 14 MWe cogeneration facility, including functional testing, commissioning, and acceptance testing. He developed procurement specifications for the digester gas treatment system and assisted with procurement specifications for cogeneration engines.

Digester System Improvements, City of Pullman, WA

Mechanical Engineer. Designed heating, ventilation, and air conditioning (HVAC) systems including 3D modeling and drafting for new and existing digester control buildings. Designed sludge pumping and sludge heating systems for a new digester facility. Assisted with 3D modeling.

Jeff Moss, PE | Process Mechanical

Jeff works on wastewater treatment plant design, planning, and construction projects for municipalities across the Northwest. He has a broad range of experience with the design, construction, and operation of both liquids and solids wastewater treatment processes. Jeff excels in delivering high quality designs and is known for being dependable and keeping client needs and expectations at the forefront of his mind. Jeff takes pride in providing trusted advice for clients and working collaboratively to find the right solutions to meet clients' needs. He has a thorough understanding of solids treatment, processing, and conveyance, and has worked with clients to identify solutions to solids problems, retrofit existing facilities to facilitate solids treatment and processing, and coordinated directly with Ecology to gain approval and permit waivers.

Education

MS, Environmental Engineering Montana State University

BS, Civil Engineering Montana State University

Licenses/Certifications

Professional Engineer: WA #20100340; CO #0057513; ID #20084; MT #72730; OR

Relevant Experience

Digester 2 Mixer Replacement, City of Missoula, MT

Project Manager and Process Mechanical Design Lead. The City of Missoula suspected they had a problem with the mixer in their secondary anaerobic digester and turned to Jacobs for assistance to confirm the issue and advise on selection of a replacement mixer. Jeff is serving as the project manager and design lead for the project. He confirmed that the existing mixer design is incompatible with current operations, which results in extremely limited mixing. The Jacobs team evaluated the feasibility of several replacement options and conducted a lifecycle cost analysis in inform decision making. A new mixing approach was selected in a collaborative workshop with the city and Jacobs is now beginning design work for the project.

Lander Street Water Renewal Facility Phase 2, Digested Sludge Storage Tank Conversion Improvements, City of Boise, ID

Process Mechanical Design Lead. The City of Boise is underway on a series of major upgrades at the Lander Street WRF that will increase the solids loading on the plant and needs additional anaerobic digester capacity. Jacobs is designing rehabilitation improvements to the existing digested sludge storage tank to allow it to function as an anaerobic digester. This project has required careful analysis of digester capacity and dewatering process requirements to confirm the City can operate both processes smoothly. The new pump, piping, valves, and control systems will be constructed in an existing building with a new room addition to maximize the value of existing structures on site. Jeff is designing mechanical improvements for the digester conversion, including replacement of the roof, digester safety equipment, withdrawal and overflow pipes, and digester gas system improvements.

Digester Rehabilitation Project, Kitsap County, WA

Design Engineer & Deputy Project Manager. Critical improvements to the aging anaerobic digesters, including repair of the annular seals, replacement and repair of the flame arrestor and pressure relief valve assemblies, replacement of the mixing pump and control valves, and installation of permanent bypass piping. Project included temporary bypass of the anaerobic digesters which necessitated a biosolids disposal waiver letter from Ecology to allow landfilling of sludge during construction. Jeff coordinated with the Ecology's regional biosolids coordinator during design to obtain the waiver before bidding.

Sterling Rose, PE, SE | Structural Lead

Sterling is a senior structural engineer with more than 20 years of experience providing structural design services for a wide variety of projects, specializing in hydraulic structures and seismic design. Sterling also has significant experience conducting structural inspections and structural observations during construction. His structural design experience includes administration/operations buildings, pump stations, temporary bypass pump stations, water-holding structures, and retrofit of a variety of structures.

Education

MS, Civil Engineering, Brigham Young University

BS, Civil Engineering, Brigham Young University

Licenses/Certifications

Professional Engineer: WA #46031; NV; CO; OR; NY

Structural Engineer: WA #46031; OR; UT; MA

Relevant Experience

Riverside Park Water Reclamation Facility Process Building Exterior Improvement, City of Spokane, WA

Structural Lead. Working as structural lead for the modifications to the Process Building. Efforts include verifying proposed modifications comply with code requirements. Additionally, efforts include designing support systems for architectural improvements that are constructible and economical.

Riverside Park Water Reclamation Facility NLT Phase 2, City of Spokane, WA

Structural Lead. Worked as structural lead for the design of multiple wastewater treatment facilities to include multiple tanks and basins as well as retrofit of existing facilities and basins. Work included a multi-story membrane filtration facility, distribution facility, retaining walls, chemical facility retrofit, and other miscellaneous facilities.

Administration and Operations Building Upgrades, MWMC, Eugene, OR

Structural Lead. Jacobs designed a 20,000 square-foot administration and operations building that houses administrative, plant operations, and core plant IT functions and is designed to be fully operational following a large earthquake. Facilities include office spaces, a secure public entry lobby, break room, 670-square-foot classroom, locker rooms, laboratory, and control room. Our solution replaces all control facilities with zero service disruptions. Jacobs evaluated renovation, rebuild, and relocate options, and MWMC decided to re-build the facility in the same location.

Coos Bay WWTP, City of Coos Bay, OR

Lead Structural Designer. Provided structural design of a WWTP expansion. Structures included administration building, electrical building and shop, headworks, influent pump station, stabilization and equalization basins, and a UV facility. Project delivery was CM/GC.

Bend WRF Secondary Expansion, City of Bend, OR

Lead Structural Designer. Provided structural design of new facilities to include a clarifier, blower building, pump station, UV building, chemical building, chlorine contact basin, retrofit of an existing aeration basin, and miscellaneous site structures.

John Quinn, PE | Civil & Utilities Lead

John is a civil & utilities engineer who works on projects ranging from stormwater conveyance and treatment design to hydraulic modeling and utility relocation. John has experience with hydraulic modeling, CAD design, GIS mapping, construction plan review, technical report writing.

Education

MS, Environmental Engineering, Washington State University, 2017

BS, Civil Engineering, Washington State University

Licenses/Certifications

Professional Engineer: WA #20123328

Relevant Experience

Wenatchee Administration Building and Public Service Center Garage, City of Wenatchee, WA

Site Civil Lead. Providing site civil design and drawings for two separate building sites; an equipment storage garage and a wastewater treatment plant administration building. Design responsibilities include pavement, grading, stormwater, and wet utilities.

City of Airway Heights Water Infrastructure Concept Designs, City of Spokane, WA

Water System Design Engineer. Provide preliminary design concepts, cost estimates, and cost sharing breakdowns for proposed water system improvements to facilitate interties between City of Spokane and City of Airway Heights water systems. Create and present exhibits to demonstrate methodology to both parties.

City of Spokane Water Main Optimization, City of Spokane, WA

Water System Design Engineer. Provide concept designs and high-level cost estimates for water distribution system upgrades to be constructed over a 40-year planning period.

West Seattle and Ballard Link Extensions, Sound Transit, Seattle, WA

Utility Relocation Project Engineer. Assisted in identifying potential utility conflicts with different rail alignment options, assist in identifying potential design solutions for utility conflicts, create design markups and delegate drafting responsibilities, provide drafting support.

Wenatchee Confluence Parkway, City of Wenatchee, WA

Sewer and Water Design Oversight/Owner's Advisor. Provide design-build team with design input for sewer and water infrastructure needing to be rerouted due to conflicts with proposed roadway construction. Review water and sewer design submittals for compliance with client and industry standards. This is a $200M roadway program that will provide a new bypass through the City of Wenatchee.

Nicole Ogan, CESCL | Permitting Lead

Education

BS, Biology sp. Ecology, Central Washington University

Licenses/Certifications

CESCL, WSDOT Biological Assessment Author, WSDOT PHD, Wetland Delineation Certification

Nicole has over 16 years of experience in biology and planning, including a range of positions and clients. Her expertise includes project management, agency coordination, biological and environmental assessments, transportation planning, and environmental permitting, focusing on infrastructure and stream restoration projects. Nicole's experience ranges from large-scale hydroelectric facility fish passage evaluations to assessments and documentation for permitting transportation, facility builds, and restoration projects, to aiding clients in environmental compliance during construction. She is also proficient in wetland delineations, mitigation planning and monitoring, stream habitat surveys, fish, wildlife, and habitat surveys, and restoration efforts. She works closely with local, state, and federal agencies throughout the environmental permitting and approvals process.

Relevant Experience

Kittitas County Search and Rescue Facility, Kittitas County, WA

Project Manager/Biologist/Permitting. The project provided project management, agency coordination, cultural and environmental documentation and permitting for the site development and build out of the facility. Work included conducting environmental field studies and documentation (Aquatic Resource Report, ESA No Effect letter, NEPA Categorical Exemption, SEPA, DNR Forest Practice Permit, Hazardous Materials documentation, and FEMA documentation), cultural field investigations and documentation, GIS data and mapping, permit and approval acquisition, agency coordination, public comment and outreach, and staff support.

Cle Elum Transfer Station Improvements, Kittitas County Solid Waste, WA

Biologist/Permitting. The project improves the access off State Route 903 and reroutes traffic within the facility, replacement of scales, and the scale house. Work included conducting environmental field studies and documentation (Aquatic Resource Memo, ESA No Effect letter, NEPA CE, SEPA, state access, local building, grading, and access permitting), cultural field investigations and documentation, GIS data and mapping, permit and approval acquisition, regulatory agency coordination, public comment and outreach, and staff support.

Kittitas County Transfer Station Relocation Project, Ellensburg Solid Waste, WA

Biologist/Permitting. The project relocated the current Ellensburg Transfer Station to State Route 97, building a new access road and solid waste facility. Work included supporting Kittitas County by conducting environmental field studies and documentation (Aquatic Resource Memo, ESA No Effect letter, NEPA CE, SEPA, state access permitting, local building, grading, and access permitting, and the FEMA floodplain mapping and permitting), cultural field investigations and documentation (Cultural Resources Report), GIS data and mapping, permit and approval acquisition, regulatory agency coordination, public comment and outreach, and staff support for the project.

Ryan Harbert, PE, LEED AP | Electrical Lead

Education

BS, Electrical Engineering, Oregon State University

Licenses/Certifications

Professional Engineer: WA #52587

Ryan has 23 years of experience working on a variety of projects, including public and private facilities design, water and wastewater treatment plants, and lighting systems for airports. He provides detailed electrical design for required facility systems with his primary responsibility for delivery of the electrical project work deliverables (drawings, specifications, and reports as required). Additionally, Ryan is a technology leader in photovoltaic power systems, including technical specification coordinator for the firm's master specification on grid-tied photovoltaic systems, and completion of North American Board of Certified Energy Practitioners certification training for grid-direct solar electric facilities.

Relevant Experience

Spokane Regional Water Reclamation Facility, Spokane County, WA

Electrical Designer. Assisted with all aspects of electrical design for a new wastewater treatment facility. Project included a headworks facility, primary clarifiers, membrane/bioreactor facilities, solids handling facilities, anaerobic and aerobic digesters, and cogeneration. Project also included maintenance and administrative type facilities. Project delivery was design-build-operate (DBO). Portions of the project were LEED certified.

WWTP Anaerobic Digestion and Cogeneration Expansion Project, City of Gresham, OR

Electrical Engineer. The $850,000 preliminary design included additional liquid organic waste receiving infrastructure, digestion capacity expansion, gas treatment system analysis, cogeneration, biosolids management, new boilers, and production of renewable natural gas.

Water Resource Recovery Facility Project, City of San Luis Obispo, CA

Lead Electrical Engineer. Acted as lead electrical engineer on a design project to support the expansion of an existing wastewater facility. Project included upgrades to existing plant liquids and solids handling facilities, and construction of new UV disinfection, membrane bioreactors, and effluent cooling towers. Electrical upgrades include new service equipment, medium voltage distribution, low voltage distribution, and networkable motor control centers. Worked closely with a local controls subconsultant to coordinate electrical design with instrumentation and controls.

Durham AWWTF Phase 5D1 Preliminary Solids Handling Mods, Clean Water Services, OR

Electrical Design Lead. Electrical designer for solids handling modifications. Work included modifications to various existing MCCs to support process improvements (new sludge grinders, gas booster, and electrically actuated valves) and considerations for NEC hazardous/classified areas.

Columbia Boulevard WWTP Secondary Process Facilities, City of Portland, OR

Electrical Quality Control Engineer. Performed design review and oversight, and some detailed design for retrofit and upgrade of existing secondary process facilities. Project involved modifying existing motor control centers, wiring for new and replaced equipment, lighting, and wiring for power, control, and instrumentation.

Craig Vanhorn, PE, AMPP | Corrosion Engineer

Craig serves as a valuable resource for material selection, metallurgical analysis, coating selection, coating inspection, failure analysis, corrosion analysis, risk-based assessment, and nondestructive evaluation. He has an outstanding knowledge in corrosion evaluation, mechanical metallurgy, microstructure, and properties of materials, nondestructive testing, and evaluation.

Education

MS, Engineering (Metallurgy and Materials Specialty), Colorado School of Mines

BS, Engineering (Mechanical Specialty), Colorado School of Mines

Licenses/Certifications

Professional Engineer (Metallurgy and Materials): CO #PE.0050753; CA; AZ #70177; TX #146671; MI #6201311203; MN #60467; NV #030143

NACE Certified Corrosion Technician: #37887

NACE Certified Coating Inspector: #77156

AMPP Certified Corrosion Technician

Relevant Experience

Biosolids Digester Facilities Project, Southeast Treatment Plant (SEP), SFPUC, CA

Materials/Corrosion Engineer. Craig served as the corrosion control engineer lead for the expansion and improvements at the SEP. His duties involved authoring a corrosion control technical memorandum, writing specifications, design of cathodic protection, and materials selection.

Fountain Valley Water Treatment Plant Facility Plan, Colorado Springs Utilities, CO

Corrosion Engineer. The project included a detailed condition assessment of aging treatment plant infrastructure, alternatives analysis, and facility planning. Jacobs worked closely with plant staff to review the physical condition of the overall facility and major individual equipment assets. Following a collaborative alternatives analysis, Jacobs developed and presented a prioritized list of facility improvements and repair and replacement projects. The condition assessment evaluated the existing cathodic protection systems, coatings, concrete basins, and miscellaneous materials throughout the facility.

Missouri River WWTP Expansion and Improvements Project, Metropolitan St. Louis Sewer District, MO

Corrosion Engineer. Performed condition assessments for various wastewater treatment equipment structures exposed to hydrogen sulfide and microbiological influenced corrosion attack. Provided rehabilitation recommendations using spray applied liners. Inspected surface preparation and coatings.

Water Treatment Plant Corrosion Control Design, Confidential Client, TX

Corrosion Engineer. Provided guidance on construction materials for chemicals used in the water treatment process. This involved specifying materials for pipes, pumps, tanks, and coatings for secondary containment.

Wilson Creek Regional Wastewater Treatment Plant Advanced Treatment and Headworks Improvement, North Texas Municipal Water District, TX

Materials/Corrosion Engineer. Craig authored the coating specification and designed and specified coating and liner systems throughout the plant. He specified a liner system for immersed concrete exposed to low concentrations of ferric sulfate and a liner system for concrete in high hydrogen sulfide environments.

FOR MORE INFORMATION OR TO HIRE US, CONTACT:

Greta Gilman, PE
Project Manager
Greta.Gilman@jacobs.com
509.464.7257 mobile



Jacobs Challenging today. Reinventing tomorrow.

CERTIFICATE OF LIABILITY INSURANCE

DATE (MM/DD/YYYY): 10/02/2026

THIS CERTIFICATE IS ISSUED AS A MATTER OF INFORMATION ONLY AND CONFERS NO RIGHTS UPON THE CERTIFICATE HOLDER. THIS CERTIFICATE DOES NOT AFFIRMATIVELY OR NEGATIVELY AMEND, EXTEND OR ALTER THE COVERAGE AFFORDED BY THE POLICIES BELOW. THIS CERTIFICATE OF INSURANCE DOES NOT CONSTITUTE A CONTRACT BETWEEN THE ISSUING INSURER(S), AUTHORIZED REPRESENTATIVE OR PRODUCER, AND THE CERTIFICATE HOLDER.

IMPORTANT: If the certificate holder is an ADDITIONAL INSURED, the policy(ies) must have ADDITIONAL INSURED provisions or be endorsed. If SUBROGATION IS WAIVED, subject to the terms and conditions of the policy, certain policies may require an endorsement. A statement on this certificate does not confer rights to the certificate holder in lieu of such endorsement(s).

PRODUCER LIC #0437153 1-212-948-1306 Marsh Risk & Insurance Services CIRTS_Support@jacobs.com 633 W. Fifth Street Los Angeles, CA 90071 USA	CONTACT NAME: PHONE (A/C, No, Ext): FAX (A/C, No): 1-212-948-1306 E-MAIL ADDRESS:
INSURED Jacobs Engineering Group Inc. C/O Global Risk Management 515 South Flower St., Suite 4800 Los Angeles, CA 90071 USA	INSURER(S) AFFORDING COVERAGE — NAIC # INSURER A : ACE AMER INS CO — 22667 INSURER B : INDEMNITY INS CO OF NORTH AMER — 43575 INSURER C : INSURER D : INSURER E : INSURER F :

COVERAGES **CERTIFICATE NUMBER:** 752886928 **REVISION NUMBER:**

THIS IS TO CERTIFY THAT THE POLICIES OF INSURANCE LISTED BELOW HAVE BEEN ISSUED TO THE INSURED NAMED ABOVE FOR THE POLICY PERIOD INDICATED. NOTWITHSTANDING ANY REQUIREMENT, TERM OR CONDITION OF ANY CONTRACT OR OTHER DOCUMENT WITH RESPECT TO WHICH THIS CERTIFICATE MAY BE ISSUED OR MAY PERTAIN, THE INSURANCE AFFORDED BY THE POLICIES DESCRIBED HEREIN IS SUBJECT TO ALL THE TERMS, EXCLUSIONS AND CONDITIONS OF SUCH POLICIES. LIMITS SHOWN MAY HAVE BEEN REDUCED BY PAID CLAIMS.

INSR LTR	TYPE OF INSURANCE	ADDL INSD	SUBR WVD	POLICY NUMBER	POLICY EFF (MM/DD/YYYY)	POLICY EXP (MM/DD/YYYY)	LIMITS	
A	X COMMERCIAL GENERAL LIABILITY	X		HDO G4938788A	07/01/26	07/01/27	EACH OCCURRENCE	$ 2,000,000
	CLAIMS-MADE [X] OCCUR						DAMAGE TO RENTED PREMISES (Ea occurrence)	$ 500,000
	X CONTRACTUAL LIABILITY						MED EXP (Any one person)	$ 5,000
	GEN'L AGGREGATE LIMIT APPLIES PER:						PERSONAL & ADV INJURY	$ 2,000,000
	X POLICY [ ] PRO-JECT [ ] LOC						GENERAL AGGREGATE	$ 3,000,000
	OTHER:						PRODUCTS - COMP/OP AGG	$ 2,000,000
								$
A	AUTOMOBILE LIABILITY	X		ISA H08891990	07/01/26	07/01/27	COMBINED SINGLE LIMIT (Ea accident)	$ 2,000,000
	X ANY AUTO						BODILY INJURY (Per person)	$
	OWNED AUTOS ONLY / SCHEDULED AUTOS						BODILY INJURY (Per accident)	$
	HIRED AUTOS ONLY / NON-OWNED AUTOS ONLY						PROPERTY DAMAGE (Per accident)	$
								$
	UMBRELLA LIAB [ ] OCCUR						EACH OCCURRENCE	$
	EXCESS LIAB [ ] CLAIMS-MADE						AGGREGATE	$
	DED [ ] RETENTION $							$
B	WORKERS COMPENSATION AND EMPLOYERS' LIABILITY Y / N	N / A		WLR C7280918A STOP-GAP CO	07/01/26	07/01/27	PER STATUTE [X] OTH-ER	
	ANYPROPRIETOR/PARTNER/EXECUTIVE OFFICER/MEMBER EXCLUDED? [N] (Mandatory in NH)						E.L. EACH ACCIDENT	$ 2,000,000
	If yes, describe under DESCRIPTION OF OPERATIONS below						E.L. DISEASE - EA EMPLOYEE	$ 2,000,000
							E.L. DISEASE - POLICY LIMIT	$ 2,000,000
A	PROFESSIONAL LIABILITY			EON G21655065 017	07/01/26	07/01/27	PER CLAIM/PER AGG	1,000,000

DESCRIPTION OF OPERATIONS / LOCATIONS / VEHICLES (ACORD 101, Additional Remarks Schedule, may be attached if more space is required)

PROJECT MGR: Greta Gilman. CONTRACT MGR: Greta Gilman. RE: Design and Construction services for adding mixing to an existing WWTP digester. CONTRACT END DATE: 01-07-2031. PROJECT NUMBER: BP001DKN. SECTOR: Public. City of Spokane is added as an additional insured for general liability & auto liability as respects the negligence of the insured in the performance of insured's services to cert holder under contract for captioned work. *THE TERMS, CONDITIONS, AND LIMITS PROVIDED UNDER THIS CERTIFICATE OF INSURANCE WILL NOT EXCEED OR BROADEN IN ANY WAY THE TERMS, CONDITIONS, AND LIMITS AGREED TO UNDER THE APPLICABLE CONTRACT.*

CERTIFICATE HOLDER

City of Spokane

808 W Spokane Blvd

Spokane , WA 99201 USA

CANCELLATION

SHOULD ANY OF THE ABOVE DESCRIBED POLICIES BE CANCELLED BEFORE THE EXPIRATION DATE THEREOF, NOTICE WILL BE DELIVERED IN ACCORDANCE WITH THE POLICY PROVISIONS.

AUTHORIZED REPRESENTATIVE



© 1988-2015 ACORD CORPORATION. All rights reserved.

SUPPLEMENT TO CERTIFICATE OF INSURANCE

DATE
10/02/2026

NAME OF INSURED: Jacobs Engineering Group Inc.

ADDITIONAL INSURED - AUTOMATIC STATUS

Named Insured Jacobs Solutions Inc.			Endorsement Number 498
Policy Symbol HDO	Policy Number G4938788A	Policy Period 07/01/2026 TO 07/01/2027	Effective Date of Endorsement 07/01/2026
Issued By (Name of Insurance Company) ACE American Insurance Company			

THIS ENDORSEMENT CHANGES THE POLICY. PLEASE READ IT CAREFULLY.

THIS ENDORSEMENT MODIFIES INSURANCE PROVIDED UNDER THE FOLLOWING:

COMMERCIAL GENERAL LIABILITY COVERAGE FORM

SCHEDULE

Name of Person or Organization: Any person or organization for whom any Named Insured is required by written contract or agreement to provide insurance, entered into prior to the loss, where such written contract or agreement does not expressly identify a particular Insurance Service Organization Form to be applied to their additional insured status.

Who Is An Insured (Section II) includes as an additional insured the person or organization shown in the Schedule, but the insurance shall not exceed the scope of coverage and/or limits of this policy. Notwithstanding the foregoing sentence, in no event shall the insurance provided such additional insured exceed the scope of the coverage and/or limits required by said contract or agreement; and, if such additional insured's scope of coverage is not expressly stated in such contract or agreement, then such coverage is limited to the additional insured's vicarious liability to the extent directly caused by the Named Insured's negligence during the Named Insured's ongoing operations. This insurance shall be primary insurance to the extent required by said contract or agreement, and any other insurance or self-insurance maintained by such person or organization shall be noncontributory with the insurance provided hereunder to the extent specified in said contract agreement.

Where the contract or agreement provides that the additional insured's scope of coverage is for the Named Insured's indemnity obligations under such contract or agreement, then such coverage shall be limited to the extent such indemnity obligations are enforceable under applicable law.

Notwithstanding the foregoing sentence, in no event shall the insurance provided such additional insured exceed the scope of coverage required by said contract or agreement

Notwithstanding anything to the contrary, the coverage provided an additional insured under this endorsement shall be limited to the minimum coverage limits required to be provided by the Named Insured under the written contract or agreement.

©Chubb. 2016. All rights reserved.

ADDITIONAL INSURED - DESIGNATED PERSONS OR ORGANIZATIONS

Named Insured			Endorsement Number
Jacobs Solutions Inc.			193
Policy Symbol	Policy Number	Policy Period	Effective Date of Endorsement
ISA	H08891990	07/01/2026 TO 07/01/2027	
Issued By (Name of Insurance Company)			
ACE American Insurance Company			

THIS ENDORSEMENT CHANGES THE POLICY. PLEASE READ IT CAREFULLY.

THIS ENDORSEMENT MODIFIES INSURANCE PROVIDED UNDER THE FOLLOWING:

BUSINESS AUTO COVERAGE FORM

Additional Insured(s): Any person or organization whom you have agreed to include as an additional insured under a written contract, provided such contract was executed prior to the date of loss.-Project and/or Contract: All projects and/or contracts where you perform work for such additional insured pursuant to any such written contract.

A. For a covered "auto," Who Is Insured is amended to include as an "insured," the persons or organizations named in this endorsement. However, these persons or organizations are an "insured" only for "bodily injury" or "property damage" resulting from acts or omissions of:

1. You.

2. Any of your "employees" or agents.

3. Any person operating a covered "auto" with permission from you, any of your "employees" or agents.

B. The persons or organizations named in this endorsement are not liable for payment of your premium.

C. With respect to the insurance afforded to these additional insureds, the following applies:

If coverage provided to the additional insured is required by a contract or agreement, the most we will pay on behalf of the additional insured is the amount of insurance:

1. Required by the contract or agreement; or

2. Available under the applicable Limits of Insurance shown in the Declarations;

whichever is less.

If such additional insured's scope of coverage is not expressly stated in a contract or agreement, then such coverage is limited to the additional insured's vicarious liability to the extent directly caused by the Named Insured's negligence during the Named Insureds ongoing operations. This insurance shall be primary insurance to the extent required by said contract or agreement, and any other insurance or self-insurance maintained by such person or organization shall be noncontributory with the insurance provided hereunder to the extent specified in said contract agreement.

©Chubb. 2016. All rights reserved.

ADDITIONAL INSURED - DESIGNATED PERSONS OR ORGANIZATIONS

Where the contract or agreement provides that the additional insured's scope of coverage is for the named insured's indemnity obligations under such contract or agreement, then such coverage shall be limited to the extent such indemnity obligations are enforceable under applicable law.

©Chubb. 2016. All rights reserved.

NOTICE TO OTHERS ENDORSEMENT – SCHEDULE – EMAIL ONLY

Named Insured Jacobs Solutions Inc.			Endorsement Number 65
Policy Symbol HDO	Policy Number G4938788A	Policy Period 07/01/2026 TO 07/01/2027	Effective Date of Endorsement
Issued By (Name of Insurance Company) ACE American Insurance Company			

Insert the policy number. The remainder of the information is to be completed only when this endorsement is issued subsequent to the preparation of the policy.

THIS ENDORSEMENT CHANGES THE POLICY. PLEASE READ IT CAREFULLY.

A. If we cancel the Policy prior to its expiration date by notice to you or the first Named Insured for any reason other than nonpayment of premium, we will endeavor, as set out below, to send written notice of cancellation, via such electronic notification as we determine, to the persons or organizations listed in the schedule that you or your representative provide or have provided to us (the "Schedule"). You or your representative must provide us with the e-mail address of such persons or organizations, and we will utilize such e-mail address that you or your representative provided to us on such Schedule.

B. The Schedule must be initially provided to us within 15 days after:

i. The beginning of the Policy period, if this endorsement is effective as of such date; or

ii. This endorsement has been added to the Policy, if this endorsement is effective after the Policy period commences.

C. The Schedule must be in an electronic format that is acceptable to us; and must be accurate.

D. Our delivery of the notification as described in Paragraph **A.** of this endorsement will be based on the most recent Schedule in our records as of the date the notice of cancellation is mailed or delivered to the first Named Insured.

E. We will endeavor to send such notice to the e-mail address corresponding to each person or organization indicated in the Schedule at least 30 days prior to the cancellation date applicable to the Policy.

F. The notice referenced in this endorsement is intended only to be a courtesy notification to the person(s) or organization(s) named in the Schedule in the event of a pending cancellation of coverage. We have no legal obligation of any kind to any such person(s) or organization(s). Our failure to provide advance notification of cancellation to the person(s) or organization(s) shown in the Schedule shall impose no obligation or liability of any kind upon us, our agents or representatives, will not extend any Policy cancellation date and will not negate any cancellation of the Policy.

G. We are not responsible for verifying any information provided to us in any Schedule, nor are we responsible for any incorrect information that you or your representative provide to us. If you or your representative does not provide us with a Schedule, we have no responsibility for taking any action under this endorsement. In addition, if neither you nor your representative provides us with e-mail address information with respect to a particular person or organization, then we shall have no responsibility for taking action with regard to such person or entity under this endorsement.

H. We may arrange with your representative to send such notice in the event of any such cancellation.

I. You will cooperate with us in providing the Schedule, or in causing your representative to provide the Schedule.

J. This endorsement does not apply in the event that you cancel the Policy.

All other terms and conditions of the Policy remain unchanged.

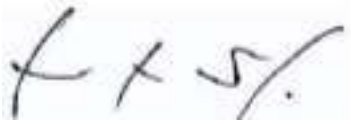

Authorized Representative

NOTICE TO OTHERS ENDORSEMENT – SCHEDULE – EMAIL ONLY

Named Insured			Endorsement Number
Jacobs Solutions Inc.			42
Policy Symbol	Policy Number	Policy Period	Effective Date of Endorsement
ISA	H08891990	07/01/2026 TO 07/01/2027	
Issued By (Name of Insurance Company)			
ACE American Insurance Company			

Insert the policy number. The remainder of the information is to be completed only when this endorsement is issued subsequent to the preparation of the policy.

THIS ENDORSEMENT CHANGES THE POLICY. PLEASE READ IT CAREFULLY.

A. If we cancel the Policy prior to its expiration date by notice to you or the first Named Insured for any reason other than nonpayment of premium, we will endeavor, as set out below, to send written notice of cancellation, via such electronic notification as we determine, to the persons or organizations listed in the schedule that you or your representative provide or have provided to us (the "Schedule"). You or your representative must provide us with the e-mail address of such persons or organizations, and we will utilize such e-mail address that you or your representative provided to us on such Schedule.

B. The Schedule must be initially provided to us within 15 days after:

i. The beginning of the Policy period, if this endorsement is effective as of such date; or

ii. This endorsement has been added to the Policy, if this endorsement is effective after the Policy period commences.

C. The Schedule must be in an electronic format that is acceptable to us; and must be accurate.

D. Our delivery of the notification as described in Paragraph **A.** of this endorsement will be based on the most recent Schedule in our records as of the date the notice of cancellation is mailed or delivered to the first Named Insured.

E. We will endeavor to send such notice to the e-mail address corresponding to each person or organization indicated in the Schedule at least 30 days prior to the cancellation date applicable to the Policy.

F. The notice referenced in this endorsement is intended only to be a courtesy notification to the person(s) or organization(s) named in the Schedule in the event of a pending cancellation of coverage. We have no legal obligation of any kind to any such person(s) or organization(s). Our failure to provide advance notification of cancellation to the person(s) or organization(s) shown in the Schedule shall impose no obligation or liability of any kind upon us, our agents or representatives, will not extend any Policy cancellation date and will not negate any cancellation of the Policy.

G. We are not responsible for verifying any information provided to us in any Schedule, nor are we responsible for any incorrect information that you or your representative provide to us. If you or your representative does not provide us with a Schedule, we have no responsibility for taking any action under this endorsement. In addition, if neither you nor your representative provides us with e-mail address information with respect to a particular person or organization, then we shall have no responsibility for taking action with regard to such person or entity under this endorsement.

H. We may arrange with your representative to send such notice in the event of any such cancellation.

I. You will cooperate with us in providing the Schedule, or in causing your representative to provide the Schedule.

J. This endorsement does not apply in the event that you cancel the Policy.

All other terms and conditions of the Policy remain unchanged.



Authorized Representative

Workers' Compensation and Employers' Liability Policy

Named Insured JACOBS SOLUTIONS INC. 515 S. FLOWER STREET, SUITE 4800 LOS ANGELES CA 90071	Endorsement Number Policy Number Symbol: WLR Number: C7280918A
Policy Period 07-01-2026 **TO** 07-01-2027	Effective Date of Endorsement 07-01-2026
Issued By (Name of Insurance Company) INDEMNITY INS. CO. OF NORTH AMERICA	
Insert the policy number. The remainder of the information is to be completed only when this endorsement is issued subsequent to the preparation of the policy. This endorsement changes the policy to which it is attached and is effective on the date issued unless otherwise stated.	

NOTICE TO OTHERS ENDORSEMENT – SCHEDULE – EMAIL ONLY

A. If we cancel this Policy prior to its expiration date by notice to you or the first Named insured for any reason other than nonpayment of premium, we will endeavor, as set out below, to send written notice of cancellation, via such electronic notification as we determine, to the persons or organizations listed in the schedule that you or your representative provide or have provided to us (the "Schedule"). You or your representative must provide us with the e-mail address of such persons or organizations, and we will utilize such e-mail address that you or your representative provided to us on such Schedule.

B. The Schedule must be initially provided to us within 15 days after:

i. The beginning of the Policy period, if this endorsement is effective as of such date; or

ii. This endorsement has been added to the Policy, if this endorsement is effective after the Policy period commences.

C. The Schedule must be in an electronic format that is acceptable to us; and must be accurate.

D. Our delivery of the notification as described in Paragraph **A.** of this endorsement will be based on the most recent Schedule in our records as of the date the notice of cancellation is mailed or delivered to the first Named Insured.

E. We will endeavor to send such notice to the e-mail address corresponding to each person or organization indicated in the Schedule at least 30 days prior to the cancellation date applicable to the Policy.

F. The notice referenced in this endorsement is intended only to be a courtesy notification to the person(s) or organization(s) named in the Schedule in the event of a pending cancellation of coverage. We have no legal obligation of any kind to any such person(s) or organization(s). Our failure to provide advance notification of cancellation to the person(s) or organization(s) shown in the Schedule shall impose no obligation or liability of any kind upon us, our agents or representatives, will not extend any Policy cancellation date and will not negate any cancellation of the Policy.

G. We are not responsible for verifying any information provided to us in any Schedule, nor are we responsible for any incorrect information that you or your representative provide to us. If you or your representative does not provide us with a Schedule, we have no responsibility for taking any action under this endorsement. In addition, if neither you nor your representative provides us with e-mail address information with respect to a particular person or organization, then we shall have no responsibility for taking action with regard to such person or entity under this endorsement.

H. We may arrange with your representative to send such notice in the event of any such cancellation.

I. You will cooperate with us in providing the Schedule, or in causing your representative to provide the Schedule.

J. This endorsement does not apply in the event that you cancel the Policy.

All other terms and conditions of this Policy remain unchanged.

This Endorsement is not applicable in the states of AZ, FL, ID, ME, NC, NJ, NM,TX and WI.

Authorized Representative

THIS ENDORSEMENT CHANGES THE POLICY. PLEASE READ IT CAREFULLY.

Named Insured **Jacobs Solutions Inc.**			Endorsement Number **19**
Policy Symbol **EON**	Policy Number **G21655065 017**	Policy Period **07/01/2026 to 07/01/2027**	Effective Date of Endorsement **07/01/2026**
Issued By (Name of Insurance Company) **ACE American Insurance Company**			

NOTICE TO OTHERS ENDORSEMENT – SCHEDULE

A. If **We** cancel or non-renew the **Policy** prior to its expiration date by notice to **You** for any reason other than nonpayment of premium, **We** will endeavor, as set out below, to send written notice of cancellation or non-renewal via such electronic or other form of notification as **We** determine, to the persons or organizations listed in the schedule that **You** or **Your** representative provide or have provided to **Us** (the **Schedule**). **You** or **Your** representative must provide **Us** with both the physical and e-mail address of such persons or organizations, and **We** will utilize such e-mail address and/or physical address that **You** or **Your** representative provided to **Us** on such **Schedule**.

B. The **Schedule** must be initially provided to **Us** within 30 days after:

   i. The beginning of the **Policy Period**, if this endorsement is effective as of such date; or

   ii. This endorsement has been added to the **Policy**, if this endorsement is effective after the **Policy Period** commences.

C. The **Schedule** must be in a format that is acceptable to **Us** and must be accurate.

D. **Our** delivery of the notification as described in Paragraph A of this endorsement will be based on the most recent **Schedule** in **Our** records as of the date the notice of cancellation or non-renewal is mailed or delivered to **You**.

E. **We** will endeavor to send or deliver such notice to the e-mail address or physical address corresponding to each person or organization indicated in the **Schedule** at least 30 days prior to the cancellation or non-renewal date applicable to the **Policy**.

F. The notice referenced in this endorsement is intended only to be a courtesy notification to the person(s) or organization(s) named in the **Schedule** in the event of a pending cancellation or non-renewal of coverage. **We** have no legal obligation of any kind to any such person(s) or organization(s). **Our** failure to provide advance notification of cancellation or non-renewal to the person(s) or organization(s) shown in the **Schedule** shall impose no obligation or liability of any kind upon **Us**, **Our** agents or representatives, will not extend any **Policy** cancellation or non-renewal date and will not negate any cancellation or non-renewal of the **Policy**.

G. **We** are not responsible for verifying any information provided to **Us** in any **Schedule**, nor are **We** responsible for any incorrect information that **You** or **Your** representative provide to **Us**. If **You** or **Your** representative does not provide **Us** with a **Schedule**, **We** have no responsibility for taking any action under this endorsement. In addition, if neither **You** nor **Your** representative provides **Us** with e-mail address and/or physical address information with respect to a particular person or organization, then **We** shall have no responsibility for taking action with regard to such person or entity under this endorsement.

H. With respect to this endorsement **Our**, **Us** or **We** means the stock insurance company listed in the Declarations, and **You** or **Your** means the insured person or entity listed in Item 1 of the Declarations page.

All other terms and conditions of this **Policy** remain unchanged.

MS-36362 (04/19)

Authorized Representative

License Information:

New search Back to results

Entity name: JACOBS ENGINEERING GROUP INC.

Business name: JACOBS ENGINEERING GROUP INC.

Entity type: Profit Corporation

UBI #: 601-008-037

Business ID: 001

Location ID: 0005

Location: Active

Location address:
999 W RIVERSIDE AVE
STE 500
SPOKANE WA 99201-1005

Mailing address:
6312 S FIDDLERS GREEN CIR
STE 300N
GREENWOOD VILLAGE CO 80111-4927

Excise tax and reseller permit status: Click here

Secretary of State information: Click here

Endorsements

Endorsements held at this loca	License #	Count	Details	Status	Expiration date	First issuance d
Spokane General Business				Active	Feb-28-2027	Oct-30-2018

Owners and officers on file with the Department of Revenue

Owners and officers	Title
BANGE, SCOTT	
HANBICKI, EDWARD	
HSU, CHIN CHANG (MIKE)	
JOHNSON, JUSTIN	
PRAGADA, ROBERT V.	

View Additional Locations

The Business Lookup information is updated nightly. Search date and time: 10/1/2026 4:03:16 PM

Contact us

How are we doing?
Take our survey!

Don't see what you expected?
Check if your browser is supported

Agenda Sheet for City Council:

Committee: PIES **Date:** 11/10/2026

Committee Agenda type: Reports, Contracts & Claims

Council Meeting Date: 12/02/2026

Date Rec'd	10/27/2026		
Clerk's File #	OPR 2026-0930		
Cross Ref #			
Project #			
Submitting Dept	FLEET SERVICES	**Bid #**	
Contact Name/Phone	RICK GIDDINGS 5096257706	**Requisition #**	SBO & RE21040
Contact E-Mail	RGIDDINGS@SPOKANECITY.ORG		
Agenda Item Type	Purchase w/o Contract		
Council Sponsor(s)	KKLITZKE ZZAPPONE		
Sponsoring at Administrators Request	NO		
Lease? NO	**Grant Related?** NO	**Public Works?** NO	
Agenda Item Name	FLEET SERVICES - PURCHASE OF MACK DUMP TRUCK FOR STREET		

Agenda Wording

Purchase of one 2026 Mack Granite 64FR Dump Truck from L&M Truck Sales of Spokane for $358,832 including sales tax using SourceWell Contract Number 033126-AGI-5.

Summary (Background)

The Street Department would like to purchase one 2026 Mack Granite Dump Truck to replace an older unit that has exceeded its economic lifecycle. Accumulated Fleet Replacement Funds will be used pending passage of an SBO to transfer 2027 budget (also on agenda). 2027 purchases will be reduced to offset the transfer. Vehicle will be purchased from L&M Truck Sales of Spokane using a SourceWell Contract. Total cost including sales tax is $358,832.

What impacts would the proposal have on historically excluded communities?

None identified.

How will data be collected, analyzed, and reported concerning the effect of the program/policy by racial, ethnic, gender identity, national origin, income level, disability, sexual orientation, or other existing disparities?

Data will not be collected.

How will data be collected regarding the effectiveness of this program, policy, or product to ensure it is the right solution?

Fleet Services collects lifecycle data for future analysis.

Describe how this proposal aligns with current City Policies, including the Comprehensive Plan, Sustainability Action Plan, Capital Improvement Program, Neighborhood Master Plans, Council Resolutions, and others?

Aligns with City Centralized Fleet Management Policy.

Council Subcommittee Review

No subcommittee for this topic.

Fiscal Impact

Approved in Current Year Budget?	NO
Total Cost	$ 358,832
Current Year Cost	$ 358,832
Subsequent Year(s) Cost	$ 0

Narrative

Vehicle will be purchased using a cooperative contract following all City competitive purchasing procedures.

Amount		Budget Account
Expense	$ 358,832	# 5110-71700-94440-56404-55004
Select	$	#
Select	$	#
Select	$	#
Select	$	#
Select	$	#

Funding Source	One-Time
Funding Source Type	Reserves

Is this funding source sustainable for future years, months, etc?

Yes

Expense Occurrence	One-Time

Other budget impacts (revenue generating, match requirements, etc.)

Approvals		Additional Approvals	
Dept Head	CLARK, STEVEN S.	PURCHASING	PRINCE, THEA
Division Director	BOSTON, MATTHEW		
Accounting Manager	ZOLLINGER, NICHOLAS		
Legal	FAIRBORN, KATHERINE		
For the Mayor	PICCOLO, MIKE		

Distribution List	
RGIDDINGS@SPOKANECITY.ORG	Tprince@spokanecity.org
ssclark@spokanecity.org	fleetservicesaccounting@spokanecity.org
streetaccounting@spokanecity.org	ceharris@spokanecity.org

STATE OF WASHINGTON

BUSINESS LICENSE

Issue Date: Feb 13, 2026

Limited Liability Company

Unified Business ID #: 604870383
Business ID #: 001
Location: 0001
Expires: Feb 28, 2027

PETERS AND KEATTS WA LLC
L&M TRUCK SALES
4001 E BOONE AVE
SPOKANE WA 99202-4508

UNEMPLOYMENT INSURANCE - ACTIVE
MINOR WORK PERMIT - ACTIVE
MOTOR VEHICLE DEALER #14831 - ACTIVE
INDUSTRIAL INSURANCE - ACTIVE
TAX REGISTRATION - ACTIVE
MISCELLANEOUS VEHICLE DEALER #14832 - ACTIVE

CITY/COUNTY ENDORSEMENTS:
SPOKANE GENERAL BUSINESS - ACTIVE

DUTIES OF MINORS:
Ages 16-17: CLEAN CABS, CLEAN SHOP, RUN ERRANDS

LICENSING RESTRICTIONS:

It is the business's responsibility to comply with minor work permit requirements. See WAC 296-125-030 and WAC 296-125-033 for Non-Agricultural and WAC 296-131-125 for Agricultural guidelines and restricted activities.

Occupations involving exposure to substances which are carcinogenic, corrosive, highly toxic, toxic sensitizers, or that cause reproductive health effects or irreversible end organ damage is prohibited for minors under 18. WAC 296-125-030(25)

Only 17 year olds may drive on public roadways if such driving is occasional and incidental. Restricted to daylight hours. 16 and 17 year olds may occasionally drive on employer's private property. WAC 296-125-030 (2). See L&I's Policy: ES.C.4.3.

This document lists the registrations, endorsements, and licenses authorized for the business named above. By accepting this document, the licensee certifies the information on the application was complete, true, and accurate to the best of his or her knowledge, and that business will be conducted in compliance with all applicable Washington state, county, and city regulations.

John Ryser
Director, Department of Revenue

STATE OF WASHINGTON

UBI: 604870383 001 0001

Expires: Feb 28, 2027

PETERS AND KEATTS WA LLC
L&M TRUCK SALES
4001 E BOONE AVE
SPOKANE WA 99202-4508

UNEMPLOYMENT INSURANCE - ACTIVE
INDUSTRIAL INSURANCE - ACTIVE
MINOR WORK PERMIT - ACTIVE
TAX REGISTRATION - ACTIVE
MOTOR VEHICLE DEALER #14831 - ACTIVE
MISCELLANEOUS VEHICLE DEALER #14832 - ACTIVE
SPOKANE GENERAL BUSINESS - ACTIVE

John Ryser
Director, Department of Revenue

L&M Truck Sales
SALES • RENTAL • SERVICE

4001 E Boone Ave. Spokane, WA 99202 (509) 535-4175

Date: October 23, 2026

Customer: City of Spokane
Contact: Rick Giddings
Email: rgiddings@spokanecity.org
Phone: (509) 625-7706

Quote Created By: Jim Banner
Email: jim@lmtrucks.com
Phone: (509) 991-4374

L&M Truck Sales is pleased to quote you the following

NEW 2026 Mack Granit 64FR

Stock number LMC9233 Vin number 1M2GR4GC9SM092333

Mack MP8-455C engine; Mack TMD14AFO-HD M-Drive Transmission; 23,000 lb front axle; 46,000 lb locking rear axles 3.73 gear ratio; Mack M_Ride 46,000 lb rear suspension; 425/65R22.5 Bridgestone front tires; 11R22.5 Bridgestone drive tires; aluminum wheels; 72 gallon fuel tank; 8.7 gallon DEF tank; electric windows and locks; electric heated mirrors; LED heated headlights; Force America hydraulic system; Henke front flat plate and plow hitch; heated plow lights; front/side and rear beacon lights; rear hitch with pintle; Lanau 15’ SHD stainless steel dump body; electric tarp

Sourcewell Member Number: 33592

Sourcewell Contract Number: 033126-AGI-5

List Price	$ 397,508.00
Sourcewell Contract Discount	$ (69,508.00)
Sourcewell Contract Sale Price	$ 328,000.00
WA State Sales Tax	$ 30,832.00
Total Sales Price	**$ 358,832.00**

Accepted by _____Date_____

P.O. _____

Agenda Sheet for City Council:

Committee: PIES **Date:** 11/10/2026

Committee Agenda type: Discussion

Council Meeting Date: 12/02/2026

Date Rec'd	11/4/2026		
Clerk's File #	OPR 2025-0756		
Cross Ref #			
Project #			
Submitting Dept	HOUSING & HOMELESS SERVICES	**Bid #**	
Contact Name/Phone	KERI 6577	**Requisition #**	
Contact E-Mail	KCEDERQUIST@SPOKANECITY.ORG		
Agenda Item Type	Contract Item		
Council Sponsor(s)	ZZAPPONE KKLITZKE		
Sponsoring at Administrators Request	NO		
Lease? NO	**Grant Related?** YES	**Public Works?** NO	
Agenda Item Name	CONTRACT AMENDMENT WITH THE DEPARTMENT OF COMMERCE TO		

Agenda Wording

Acceptance of a contract amendment with the Department of Commerce adding $8,271,738.00 in State Fiscal Year 2027 funding for the Encampment Resolution Program, and authorizing subrecipient grant agreements with funder-approved providers.

Summary (Background)

The Encampment Resolution Program (ERP), established by the Dept of Commerce, funds local efforts to resolve encampments on public property by connecting unsheltered individuals to housing and supportive services. As lead grantee, the City of Spokane's HHS department will administer ERP funds to sustain and expand housing options for individuals relocated from encampments, support outreach and navigation services, and ensure data and performance reporting to commerce. Summary of Work: HHS will subcontract with local housing and service providers to operate ERP-funded projects across the housing continuum: • Catalyst (operated by Catholic Charities of Eastern WA): temporary housing with on-site wraparound services and case management - $4,525,000 • Revive Emergency Beds: 35 short-term beds for ERP referrals with stabilization supports - $1,092,659 • Revive Permanent Housing with Services: 22 permanent housing units with individualized services - $942,440 • El Estero (operated by Catholic Housing Communities): 25 permanent housing units with individualized services - $533,750 • New Roots Tiny Home Village (in partnership with Waters Meet Foundation): new tiny home program with on-site case management - $575,000 • I2 Strategies: outreach and identification of ERP-eligible individuals to assist CHHS in building By-Names List - $127,889 ERP funds may also be used for outreach, data tracking, and staff coordination to ensure program effectiveness. HMIS and contract management

What impacts would the proposal have on historically excluded communities?

This program reduces housing and service disparities by prioritizing low-barrier access for people disproportionately impacted by homelessness—particularly BIPOC, disabled, and other historically excluded residents—and by partnering with providers that deliver culturally responsive, trauma-informed care

How will data be collected, analyzed, and reported concerning the effect of the program/policy by racial, ethnic, gender identity, national origin, income level, disability, sexual orientation, or other existing disparities?

All data will be entered into HMIS and quarterly reports will be given by HMIS to Council on program outcomes

How will data be collected regarding the effectiveness of this program, policy, or product to ensure it is the right solution?

All projects funded will be expected to follow the Five-Year Plan to Prevent and End Homelessness.

Describe how this proposal aligns with current City Policies, including the Comprehensive Plan, Sustainability Action Plan, Capital Improvement Program, Neighborhood Master Plans, Council Resolutions, and others?

This program aligns with the CoC's Five Year Strategic Plan to End Homelessness as well as the H.O.M.E. Starts Here Initiative

Council Subcommittee Review

Fiscal Impact

Approved in Current Year Budget?	N/A
Total Cost	$ 16,543,476.00
Current Year Cost	$ 8,271,738
Subsequent Year(s) Cost	$

Narrative

Amendment adds $8,271,738 in SFY27 Commerce funding (total $16,543,476). $7,796,738 funds subrecipient services, based on capacity, units, and service level; $475,000 funds City administration, within the contract's 15% cap.

Amount		Budget Account
Expense	$ 213,000.00	# 1540-95655-65430-51991-9999
Expense	$ 66,669.00	# 1540-95655-65430-52991-9999
Expense	$ 195,331.00	# 1540-95655-65430-54992-9999
Expense	$ 7,796,738.00	# 1540-95655-65410-54201-9999
Revenue	$ 8,271,738.00	# 1540-95655-99999-33442-9999
Select	$	#

Funding Source	One-Time
Funding Source Type	Grant

Is this funding source sustainable for future years, months, etc?

No, this contract is for a fixed period of 7/1/26 – 6/30/27

Expense Occurrence	One-Time

Other budget impacts (revenue generating, match requirements, etc.)

N/A. This is a reimbursement-based contract with no revenue-generating component and no match requirement.

Approvals		Additional Approvals	
Dept Head	ANDERSON, ARIELLE M.	ACCOUNTING -	BROWN, SKYLER
Division Director	KINDER, DAWN		
Accounting Manager	DUFFEY, ANDREW		
Legal	FAIRBORN, KATHERINE		
For the Mayor	PICCOLO, MIKE		

Distribution List	
chhsaccounting@spokanecity.org	dnorman@spokanecity.org
Chhscontracts@spokanecity.org	ppourzanjani@spokanecity.org
kcederquist@spokanecity.org	

Amendment

Contract Number: SFY26-45320211-002
Amendment: 1

HOUSING DIVISION
POLICY UNIT
ENCAMPMENT RESOLUTION PROGRAM

1. Contractor City of Spokane 808 W Spokane Falls Blvd Spokane, WA 99201	**2. Contractor Doing Business As (optional)**	
3. Contractor Representative (only if updated)	**4. COMMERCE Representative (only if updated)**	
5. Original Contract Amount (and any previous amendments) $8,271,738	**6. Amendment Amount** $8,271,738	**7. New Contract Amount** $16,543,476
8. Amendment Funding Source **Federal: State:** $8,271,738 **Other: N/A:**	**9. Amendment Start Date** 7/1/2026	**10. Amendment End Date** 6/30/2027
11. Federal Funds (as applicable):	**Federal Agency:**	**ALN:**

12. Amendment Purpose: Adding SFY27 ERP funding.

COMMERCE, defined as the Department of Commerce, and the Contractor, as defined above, acknowledge and accept the terms of this Contract As Amended and attachments and have executed this Contract Amendment on the date below to start as of the date and year referenced above. The rights and obligations of both parties to this Contract As Amended are governed by this Contract Amendment and the following other documents incorporated by reference: Contractor Terms and Conditions including Attachment "A" – Scope of Work, Attachment "B" – Budget. A copy of this Contract Amendment shall be attached to and made a part of the original Contract between COMMERCE and the Contractor. Any reference in the original Contract to the "Contract" shall mean the "Contract as Amended".

Washington State Department of Commerce

FOR CONTRACTOR	**FOR COMMERCE**
Alexander Scott – City Administrator	Amy Buckler, Assistant Director – HD
Date	Date
	APPROVED AS TO FORM ONLY Sandra Adix Assistant Attorney General 3/20/2014 Date

This Contract is **amended** as follows:

3. COMPENSATION

COMMERCE shall pay an amount not to exceed **$16,543,476** for the performance of all things necessary for or incidental to the performance of work as set forth in the Scope of Work. Contractor's compensation shall be based on the terms of the Scope of Work and Budget.

Expenses

Contractor shall receive reimbursement for approved expenses as identified below or as authorized in advance by COMMERCE as reimbursable. The maximum amount to be paid to the Contractor for authorized expenses shall not exceed **$16,543,476**, which amount is included in the Grant total above.

If travel is required to complete the scope of work and approved in advance in writing, reimbursable travel expenses may include airfare (economy or coach class only), other transportation, lodging, and food necessary during periods of required travel. Contractor shall be reimbursed at a rate not to exceed the current state rate and in accordance with the State of Washington Office of Financial Management Travel Regulations.

Attachment A Scope of Work is hereby revised to include additional activities in red:

- Tiny Homes Village (new name forthcoming): providing tiny home and wrap around support services to eligible ERP individuals. This site will provide tiny home units and shared restroom/community spaces along with on site case management and connections to behavioral health services. This includes a partnership with Waters Meet to launch the pilot with a minor contract awarded to Waters Meet for this work in addition to the operational contract to be issued when the site is ready.

Attachment B Budget:

Activity	FY26	FY27	TOTAL	Scope
Catalyst Operations	$4,525,000	$4,525,000	$9,050,000	Operation of Catalyst, 80 units for individuals exiting encampments.
Revive Counseling	$1,092,596	$1,092,596	$2,185,192	35 emergency shelter beds for individuals existing encampments.
Revive Counseling	$942,503	$942,503	$1,885,006	22 units of PHS across three sites; Shemuel's Space, AJ's Place, and Amarah's Lofts
CCEW - El Estero	$533,750	$533,750	$1,067,500	25 units of scattered PSH
Tiny Home Village	$575,000	$575,000	$1,150,000	Operations of 30 unit Tiny Homes Village, of which approximately 50% of units will be available for ERP individuals. $41,168 of these funds will support Waters Meets work to launch this project with the remainder supporting the operations of the site once ready.
I2 Strategies	$127,889	$127,889	$255,778	Consultation and BNL Management
City of Spokane	$475,000	$475,000	$950,000	Contract Management and HMIS
Total	**$8,271,738**	**$8,271,738**	**$16,543,476**	

ALL OTHER TERMS AND CONDITIONS OF THIS CONTRACT REMAIN IN FULL FORCE AND EFFECT.

Agenda Sheet for City Council:

Committee: PIES **Date:** 11/10/2026

Committee Agenda type: Reports, Contracts & Claims

Council Meeting Date: 12/02/2026

Date Rec'd	8/10/2026		
Clerk's File #	OPR 2026-0931		
Cross Ref #			
Project #	2024076		
Submitting Dept	INTEGRATED CAPITAL	**Bid #**	RFQU 6489-26
Contact Name/Phone	TYLER 6733	**Requisition #**	CR 29103
Contact E-Mail	TKIMBRELL@SPOKANECITY.ORG		
Agenda Item Type	Contract Item		
Council Sponsor(s)	ZZAPPONE		
Sponsoring at Administrators Request	NO		
Lease? NO	**Grant Related?** YES	**Public Works?** NO	
Agenda Item Name	WSDOT CONTRACT FOR MONROE BRIDGE SUICIDE PREVENTION BARRIERS		

Agenda Wording

Contract for Monroe Bridge Suicide Prevention Barriers Study with Coffman Engineers, Inc., for $332,107.44. An administrative reserve of $33,210.74 will be set aside.

Summary (Background)

Integrated Capital Management issued an RFQu in spring 2026 seeking qualified firms to complete a study of feasible suicide prevention options for the Monroe St. Bridge. Three responses were received, and Coffman Engineers was selected for contract award. The work is set to begin in Q3 2026 and continue through Q4 of 2027.

What impacts would the proposal have on historically excluded communities?

Public works services and projects are designed to serve all citizens and businesses. We strive to offer a consistent level of service to all, distribute public investment throughout the community, and respond to gaps in services identified in various City plans.

How will data be collected, analyzed, and reported concerning the effect of the program/policy by racial, ethnic, gender identity, national origin, income level, disability, sexual orientation, or other existing disparities?

n/a

How will data be collected regarding the effectiveness of this program, policy, or product to ensure it is the right solution?

Public Works follows the City's established procurement and public works bidding regulations and policies to bring items forward and then uses contract management best practices to ensure desired outcomes and regulatory compliance.

Describe how this proposal aligns with current City Policies, including the Comprehensive Plan, Sustainability Action Plan, Capital Improvement Program, Neighborhood Master Plans, Council Resolutions, and others?

This work is consistent with annual budget strategies to limit costs and approved projects in the 6-year CIP.

Council Subcommittee Review

n/a

Fiscal Impact

Approved in Current Year Budget?	YES
Total Cost	$ 332,107.44
Current Year Cost	$ 332,107.44
Subsequent Year(s) Cost	$

Narrative

The project is being entirely funded through congressionally directed spending. No local match is required.

Amount		Budget Account
Expense	$ 332,107.44	# 3200 95164 42300 54201 86164
Select	$	#
Select	$	#
Select	$	#
Select	$	#
Select	$	#

Funding Source	One-Time
Funding Source Type	Grant

Is this funding source sustainable for future years, months, etc?

n/a

Expense Occurrence	One-Time

Other budget impacts (revenue generating, match requirements, etc.)

No match required.

Approvals		Additional Approvals	
Dept Head	PICANCO, KEVIN	PURCHASING	WAHL, CONNIE
Division Director	FEIST, MARLENE	ACCOUNTING -	BROWN, SKYLER
Accounting Manager	ZOLLINGER, NICHOLAS		
Legal	FAIRBORN, KATHERINE		
For the Mayor	PICCOLO, MIKE		

Distribution List

Jeff Mitchell, jeff.mitchell@coffman.com	icmaccounting@spokanecity.org
tax&licenses@spokanecity.org	kpicanco@spokanecity.org
eraea@spokanecity.org	tkimbrell@spokanecity.org
nsulya@spokanecity.org	publicworksaccounting@spokanecity.org

Local Agency A&E Professional Services
Negotiated Hourly Rate Consultant Agreement

Agreement Number:

Firm/Organization Legal Name (do not use dba's): Coffman Engineers, Inc.	
Address 221 N. Wall St, Suite 500, Spokane WA 99201	Federal Aid Number LA11094
UBI Number 600-310-893	Federal TIN 91-1053429
Execution Date December 1, 2026	Completion Date December 31, 2028
1099 Form Required ☒ Yes ☐ No	Federal Participation ☒ Yes ☐ No
Project Title Feasibility Study for Monroe Street Physical Suicide Deterrent System	
Description of Work Coffman Engineers will conduct research to determine the best solutions for implementing a physical suicide deterrent system on the Monroe Street bridge that also maintains the historical significance of the bridge.	
☐ Yes ☒ No DBE Participation ☐ Yes ☒ No MBE Participation ☐ Yes ☒ No WBE Participation ☐ Yes ☒ No SBE Participation	Maximum Amount Payable: $332,107.44

Index of Exhibits

Exhibit A Scope of Work
Exhibit B DBE Participation
Exhibit C Preparation and Delivery of Electronic Engineering and Other Data
Exhibit D Prime Consultant Cost Computations
Exhibit E Sub-consultant Cost Computations
Exhibit F Title VI Assurances
Exhibit G Certification Documents
Exhibit H Liability Insurance Increase
Exhibit I Alleged Consultant Design Error Procedures
Exhibit J Consultant Claim Procedures

THIS AGREEMENT, made and entered into as shown in the "Execution Date" box on page one (1) of this AGREEMENT, between the Coffman Engineerings, Inc., hereinafter called the "AGENCY," and the "Firm / Organization Name" referenced on page one (1) of this AGREEMENT, hereinafter called the "CONSULTANT."

WHEREAS, the AGENCY desires to accomplish the work referenced in "Description of Work" on page one (1) of this AGREEMENT and hereafter called the "SERVICES;" and does not have sufficient staff to meet the required commitment and therefore deems it advisable and desirable to engage the assistance of a CONSULTANT to provide the necessary SERVICES; and

WHEREAS, the CONSULTANT represents that they comply with the Washington State Statutes relating to professional registration, if applicable, and has signified a willingness to furnish consulting services to the AGENCY.

NOW, THEREFORE, in consideration of the terms, conditions, covenants, and performance contained herein, or attached and incorporated and made a part hereof, the parties hereto agree as follows:

I. General Description of Work

The work under this AGREEMENT shall consist of the above-described SERVICES as herein defined, and necessary to accomplish the completed work for this project. The CONSULTANT shall furnish all services, labor, and related equipment and, if applicable, sub-consultants and subcontractors necessary to conduct and complete the SERVICES as designated elsewhere in this AGREEMENT.

II. General Scope of Work

The Scope of Work and projected level of effort required for these SERVICES is described in Exhibit "A" attached hereto and by this reference made a part of this AGREEMENT. The General Scope of Work was developed utilizing performance based contracting methodologies.

III. General Requirements

All aspects of coordination of the work of this AGREEMENT with outside agencies, groups, or individuals shall receive advance approval by the AGENCY. Necessary contacts and meetings with agencies, groups, and/or individuals shall be coordinated through the AGENCY. The CONSULTANT shall attend coordination, progress, and presentation meetings with the AGENCY and/or such State, Federal, Community, City, or County officials, groups or individuals as may be requested by the AGENCY. The AGENCY will provide the CONSULTANT sufficient notice prior to meetings requiring CONSULTANT participation. The minimum required hours or days' notice shall be agreed to between the AGENCY and the CONSULTANT and shown in Exhibit "A."

The CONSULTANT shall prepare a monthly progress report, in a form approved by the AGENCY, which will outline in written and graphical form the various phases and the order of performance of the SERVICES in sufficient detail so that the progress of the SERVICES can easily be evaluated.

The CONSULTANT, any sub-consultants, and the AGENCY shall comply with all Federal, State, and local laws, rules, codes, regulations, and all AGENCY policies and directives, applicable to the work to be performed under this AGREEMENT. This AGREEMENT shall be interpreted and construed in accordance with the laws of the State of Washington.

Participation for Disadvantaged Business Enterprises (DBE) or Small Business Enterprises (SBE), if required, per 49 CFR Part 26, shall be shown on the heading of this AGREEMENT. If DBE firms are utilized at the commencement of this AGREEMENT, the amounts authorized to each firm and their certification number will be shown on Exhibit "B" attached hereto and by this reference made part of this AGREEMENT. If the Prime CONSULTANT is, a DBE certified firm they must comply with the Commercial Useful Function (CUF) regulation outlined in the AGENCY's "DBE Program Participation Plan" and perform a minimum of 30% of the total amount of this AGREEMENT. It is recommended, but not required, that non-DBE Prime CONSULTANTS perform a minimum of 30% of the total amount of this AGREEMENT.

In the absence of a mandatory DBE goal, a voluntary SBE goal amount of ten percent of the Consultant Agreement is established. The Consultant shall develop a SBE Participation Plan prior to commencing work. Although the goal is voluntary, the outreach efforts to provide SBE maximum practicable opportunities are not.

The CONSULTANT, on a monthly basis, shall enter the amounts paid to all firms (including Prime) involved with this AGREEMENT into the wsdot.diversitycompliance.com program. Payment information shall identify any DBE Participation.

All Reports, PS&E materials, and other data furnished to the CONSULTANT by the AGENCY shall be returned. All electronic files, prepared by the CONSULTANT, must meet the requirements as outlined in Exhibit "C – Preparation and Delivery of Electronic Engineering and other Data."

All designs, drawings, specifications, documents, and other work products, including all electronic files, prepared by the CONSULTANT prior to completion or termination of this AGREEMENT are instruments of service for these SERVICES, and are the property of the AGENCY. Reuse by the AGENCY or by others, acting through or on behalf of the AGENCY of any such instruments of service, not occurring, as a part of this SERVICE, shall be without liability or legal exposure to the CONSULTANT.

Any and all notices or requests required under this AGREEMENT shall be made in writing and sent to the other party by (i) certified mail, return receipt requested, or (ii) by email or facsimile, to the address set forth below:

If to AGENCY:
Name: Integrated Capital Management
Agency: City of Spokane
Address: 808 W Spokane Falls Blvd
City: Spokane State: WA Zip: 99201
Email: tkimbrell@spokanecity.org
Phone: 509-625-6733
Facsimile: n/a

If to CONSULTANT:
Name: Jeff Mitchell
Agency: Coffman Engineers, Inc.
Address: 211 N Wall St, Suite 500
City: Spokane State: WA Zip: 99201
Email: jeff.mitchell@coffman.com
Phone: 509-328-2994
Facsimile: n/a

IV. Time for Beginning and Completion

The CONSULTANT shall not begin any work under the terms of this AGREEMENT until authorized in writing by the AGENCY. All work under this AGREEMENT shall conform to the criteria agreed upon detailed in the AGREEMENT documents. These SERVICES must be completed by the date shown in the heading of this AGREEMENT titled "Completion Date."

The established completion time shall not be extended because of any delays attributable to the CONSULTANT, but may be extended by the AGENCY in the event of a delay attributable to the AGENCY, or because of unavoidable delays caused by an act of GOD, governmental actions, or other conditions beyond the control of the CONSULTANT. A prior supplemental AGREEMENT issued by the AGENCY is required to extend the established completion time.

V. Payment Provisions

The CONSULTANT shall be paid by the AGENCY for completed SERVICES rendered under this AGREEMENT as provided hereinafter. Such payment shall be full compensation for SERVICES performed or SERVICES rendered and for all labor, materials, supplies, equipment, and incidentals necessary to complete SERVICES. The CONSULTANT shall conform to all applicable portions of 48 CFR Part 31 (www.ecfr.gov).

A. Hourly Rates: Hourly rates are comprised of the following elements - Direct (Raw) Labor, Indirect Cost Rate, and Fee (Profit). The CONSULTANT shall be paid by the AGENCY for work done, based upon the negotiated hourly rates shown in Exhibits "D" and "E" attached hereto and by reference made part of this AGREEMENT. These negotiated hourly rates will be accepted based on a review of the CONSULTANT's direct labor rates and indirect cost rate computations and agreed upon fee. The accepted negotiated rates shall be memorialized in a final written acknowledgment between the parties. Such final written acknowledgment shall be incorporated into, and become a part of, this AGREEMENT. The initially accepted negotiated rates shall be applicable from the approval date, as memorialized in a final written acknowledgment, to 180 days following the CONSULTANT's fiscal year end (FYE) date.

   The direct (raw) labor rates and classifications, as shown on Exhibits "D" and "E" shall be subject to renegotiations for each subsequent twelve (12) month period (180 days following FYE date to 180 days following FYE date) upon written request of the CONSULTANT or the AGENCY. The written request must be made to the other party within ninety (90) days following the CONSULTANT's FYE date. If no such written request is made, the current direct (raw) labor rates and classifications as shown on Exhibits "D" and "E" will remain in effect for the twelve (12) month period.

   Conversely, if a timely request is made in the manner set forth above, the parties will commence negotiations to determine the new direct (raw) labor rates and classifications that will be applicable for the twelve (12 month period. Any agreed to renegotiated rates shall be memorialized in a final written acknowledgment between the parties. Such final written acknowledgment shall be incorporated into, and become a part of, this AGREEMENT. If requested, the CONSULTANT shall provide current payroll register and classifications to aid in negotiations. If the parties cannot reach an agreement on the direct (raw) labor rates and classifications, the AGENCY shall perform an audit of the CONSULTANT's books and records to determine the CONSULTANT's actual costs. The audit findings will establish the direct (raw) labor rates and classifications that will applicable for the twelve (12) month period.

   The fee as identified in Exhibits "D" and "E" shall represent a value to be applied throughout the life of the AGREEMENT.

   The CONSULTANT shall submit annually to the AGENCY an updated indirect cost rate within 180 days of the close of its fiscal year. An approved updated indirect cost rate shall be included in the current fiscal year rate under this AGREEMENT, even if/when other components of the hourly rate are not renegotiated. These rates will be applicable for the twelve (12) month period. At the AGENCY's option, a provisional and/or conditional indirect cost rate may be negotiated. This provisional or conditional indirect rate shall remain in effect until the updated indirect cost rate is completed and approved. Indirect cost rate costs incurred during the provisional or conditional period will not be adjusted. The CONSULTANT may request an extension of the last approved indirect cost rate for the twelve (12) month period. These requests for provisional indirect cost rate and/or extension will be considered on a case-by-case basis, and if granted, will be memorialized in a final written acknowledgment.

   The CONSULTANT shall maintain and have accessible support data for verification of the components of the hourly rates, i.e., direct (raw) labor, indirect cost rate, and fee (profit) percentage. The CONSULTANT shall bill each employee's actual classification, and actual salary plus indirect cost rate plus fee.

A. Direct Non-Salary Costs: Direct Non-Salary Costs will be reimbursed at the actual cost to the CONSULTANT. These charges may include, but are not limited to, the following items: travel, printing, long distance telephone, supplies, computer charges, and fees of sub-consultants. Air or train travel will be reimbursed only to lowest price available, unless otherwise approved by the AGENCY. The CONSULTANT shall comply with the rules and regulations regarding travel costs (excluding air, train, and rental car costs) in accordance with the WSDOT's Accounting Manual M 13-82, Chapter 10 – Travel Rules and Procedures, and all revisions thereto. Air, train, and rental card costs shall be reimbursed in accordance with 48 Code of Federal Regulations (CFR) Part 31.205-46 "Travel Costs." The billing for Direct Non-salary Costs shall include an itemized listing of the charges directly identifiable with these SERVICES. The CONSULTANT shall maintain the original supporting documents in their office. Copies of the original supporting documents shall be supplied to the STATE upon request. All above charges must be necessary for the SERVICES provided under this AGREEMENT.

B. Maximum Amount Payable: The Maximum Amount Payable by the AGENCY to the CONSULTANT under this AGREEMENT shall not exceed the amount shown in the heading of this AGREEMENT on page one (1.) The Maximum Amount Payable does not include payment for extra work as stipulated in section XIII, "Extra Work." No minimum amount payable is guaranteed under this AGREEMENT.

C. Monthly Progress Payments: Progress payments may be claimed on a monthly basis for all costs authorized in A and B above. Detailed statements shall support the monthly billings for hours expended at the rates established in Exhibit "D," including names and classifications of all employees, and billings for all direct non-salary expenses. To provide a means of verifying the billed salary costs for the CONSULTANT's employees, the AGENCY may conduct employee interviews. These interviews may consist of recording the names, titles, salary rates, and present duties of those employees performing work on the SERVICES at the time of the interview.

D. Final Payment: Final Payment of any balance due the CONSULTANT of the gross amount earned will be made promptly upon its verification by the AGENCY after the completion of the SERVICES under this AGREEMENT, contingent upon receipt of all PS&E, plans, maps, notes, reports, electronic data, and other related documents, which are required to be furnished under this AGREEMENT. Acceptance of such Final Payment by the CONSULTANT shall constitute a release of all claims for payment, which the CONSULTANT may have against the AGENCY unless such claims are specifically reserved in writing and transmitted to the AGENCY by the CONSULTANT prior to its acceptance. Said Final Payment shall not, however, be a bar to any claims that the AGENCY may have against the CONSULTANT or to any remedies the AGENCY may pursue with respect to such claims.

The payment of any billing will not constitute agreement as to the appropriateness of any item and at the time of final audit all required adjustments will be made and reflected in a final payment. In the event that such final audit reveals an overpayment to the CONSULTANT, the CONSULTANT will refund such overpayment to the AGENCY within thirty (30) calendar days of notice of the overpayment. Such refund shall not constitute a waiver by the CONSULTANT for any claims relating to the validity of a finding by the AGENCY of overpayment. Per WSDOT's "Audit Guide for Consultants," Chapter 23 "Resolution Procedures," the CONSULTANT has twenty (20) working days after receipt of the final Post Audit to begin the appeal process to the AGENCY for audit findings

E. Inspection of Cost Records: The CONSULTANT and their sub-consultants shall keep available for inspection by representatives of the AGENCY and the United States, for a period of six (6) years after receipt of final payment, the cost records and accounts pertaining to this AGREEMENT and all items related to or bearing upon these records with the following exception: if any litigation, claim or audit arising out of, in connection with, or related to this AGREEMENT is initiated before the expiration of the six (6) year period, the cost records and accounts shall be retained until such litigation, claim, or audit involving the records is completed. An interim or post audit may be performed on this AGREEMENT. The audit, if any, will be performed by the State Auditor, WSDOT's Internal Audit Office and /or at the request of the AGENCY's Project Manager.

VI. Sub-Contracting

The AGENCY permits subcontracts for those items of SERVICES as shown in Exhibit "A" attached hereto and by this reference made part of this AGREEMENT.

The CONSULTANT shall not subcontract for the performance of any SERVICE under this AGREEMENT without prior written permission of the AGENCY. No permission for subcontracting shall create, between the AGENCY and sub-consultant, any contract or any other relationship.

Compensation for this sub-consultant SERVICES shall be based on the cost factors shown on Exhibit "E" attached hereto and by this reference made part of this AGREEMENT.

The SERVICES of the sub-consultant shall not exceed its maximum amount payable identified in each sub consultant cost estimate unless a prior written approval has been issued by the AGENCY.

All reimbursable direct labor, indirect cost rate, direct non-salary costs and fee costs for the sub-consultant shall be negotiated and substantiated in accordance with section V "Payment Provisions" herein and shall be memorialized in a final written acknowledgment between the parties

All subcontracts shall contain all applicable provisions of this AGREEMENT, and the CONSULTANT shall require each sub-consultant or subcontractor, of any tier, to abide by the terms and conditions of this AGREEMENT. With respect to sub-consultant payment, the CONSULTANT shall comply with all applicable sections of the STATE's Prompt Payment laws as set forth in RCW 39.04.250 and RCW 39.76.011.

The CONSULTANT, sub-recipient, or sub-consultant shall not discriminate on the basis of race, color, national origin, or sex in the performance of this AGREEMENT. The CONSULTANT shall carry out applicable requirements of 49 CFR Part 26 in the award and administration of DOT-assisted contracts. Failure by the CONSULTANT to carry out these requirements is a material breach of this AGREEMENT, which may result in the termination of this AGREEMENT or such other remedy as the recipient deems appropriate.

VII. Employment and Organizational Conflict of Interest

The CONSULTANT warrants that they have not employed or retained any company or person, other than a bona fide employee working solely for the CONSULTANT, to solicit or secure this contract, and that it has not paid or agreed to pay any company or person, other than a bona fide employee working solely for the CONSULTANT, any fee, commission, percentage, brokerage fee, gift, or any other consideration, contingent upon or resulting from the award or making of this agreement. For breach or violation of this warrant, the AGENCY shall have the right to annul this AGREEMENT without liability or, in its discretion, to deduct from this AGREEMENT price or consideration or otherwise recover the full amount of such fee, commission, percentage, brokerage fee, gift, or contingent fee.

Any and all employees of the CONSULTANT or other persons while engaged in the performance of any work or services required of the CONSULTANT under this AGREEMENT, shall be considered employees of the CONSULTANT only and not of the AGENCY, and any and all claims that may arise under any Workmen's Compensation Act on behalf of said employees or other persons while so engaged, and any and all claims made by a third party as a consequence of any act or omission on the part of the CONSULTANT's employees or other persons while so engaged on any of the work or services provided to be rendered herein, shall be the sole obligation and responsibility of the CONSULTANT.

The CONSULTANT shall not engage, on a full- or part-time basis, or other basis, during the period of this AGREEMENT, any professional or technical personnel who are, or have been, at any time during the period of this AGREEMENT, in the employ of the United States Department of Transportation or the AGENCY, except regularly retired employees, without written consent of the public employer of such person if he/she will be working on this AGREEMENT for the CONSULTANT.

VIII. Nondiscrimination

During the performance of this AGREEMENT, the CONSULTANT, for itself, its assignees, sub-consultants, subcontractors and successors in interest, agrees to comply with the following laws and regulations:

- Title VI of the Civil Rights Act of 1964

  (42 U.S.C. Chapter 21 Subchapter V § 2000d through 2000d-4a)
- Federal-aid Highway Act of 1973 (23 U.S.C. Chapter 3 § 324)
- Rehabilitation Act of 1973

  (29 U.S.C. Chapter 16 Subchapter V § 794)
- Age Discrimination Act of 1975 (42 U.S.C. Chapter 76 § 6101 *et. seq.*)
- Civil Rights Restoration Act of 1987 (Public Law 100-259)
- American with Disabilities Act of 1990 (42 U.S.C. Chapter 126 § 12101 *et. seq.*)
- 23 CFR Part 200
- 49 CFR Part 21
- 49 CFR Part 26
- RCW 49.60.180

In relation to Title VI of the Civil Rights Act of 1964, the CONSULTANT is bound by the provisions of Exhibit "F" attached hereto and by this reference made part of this AGREEMENT, and shall include the attached Exhibit "F" in every sub-contract, including procurement of materials and leases of equipment, unless exempt by the Regulations or directives issued pursuant thereto.

IX. Termination of Agreement

The right is reserved by the AGENCY to terminate this AGREEMENT at any time with or without cause upon ten (10) days written notice to the CONSULTANT.

In the event this AGREEMENT is terminated by the AGENCY, other than for default on the part of the CONSULTANT, a final payment shall be made to the CONSULTANT for actual hours charged at the time of termination of this AGREEMENT, plus any direct non-salary costs incurred up to the time of termination of this AGREEMENT.

No payment shall be made for any SERVICES completed after ten (10) days following receipt by the CONSULTANT of the notice to terminate. If the accumulated payment made to the CONSULTANT prior to Notice of Termination exceeds the total amount that would be due when computed as set forth in paragraph two (2) of this section, then no final payment shall be due and the CONSULTANT shall immediately reimburse the AGENCY for any excess paid.

If the services of the CONSULTANT are terminated by the AGENCY for default on the part of the CONSULTANT, the above formula for payment shall not apply.

In the event of a termination for default, the amount to be paid to the CONSULTANT shall be determined by the AGENCY with consideration given to the actual costs incurred by the CONSULTANT in performing SERVICES to the date of termination, the amount of SERVICES originally required which was satisfactorily completed to date of termination, whether that SERVICE is in a form or a type which is usable to the AGENCY at the time of termination, the cost to the AGENCY of employing another firm to complete the SERVICES required and the time which may be required to do so, and other factors which affect the value to the AGENCY of the SERVICES performed at the time of termination. Under no circumstances shall payment made under this subsection exceed the amount, which would have been made using the formula set forth in paragraph two (2) of this section.

If it is determined for any reason, that the CONSULTANT was not in default or that the CONSULTANT's failure to perform is without the CONSULTANT's or its employee's fault or negligence, the termination shall be deemed to be a termination for the convenience of the AGENCY. In such an event, the CONSULTANT would be reimbursed for actual costs in accordance with the termination for other than default clauses listed previously.

The CONSULTANT shall, within 15 days, notify the AGENCY in writing, in the event of the death of any member, partner, or officer of the CONSULTANT or the death or change of any of the CONSULTANT's supervisory and/or other key personnel assigned to the project or disaffiliation of any principally involved CONSULTANT employee.

The CONSULTANT shall also notify the AGENCY, in writing, in the event of the sale or transfer of 50% or more of the beneficial ownership of the CONSULTANT within 15 days of such sale or transfer occurring. The CONSULTANT shall continue to be obligated to complete the SERVICES under the terms of this AGREEMENT unless the AGENCY chooses to terminate this AGREEMENT for convenience or chooses to renegotiate any term(s) of this AGREEMENT. If termination for convenience occurs, final payment will be made to the CONSULTANT as set forth in the second and third paragraphs of this section.

Payment for any part of the SERVICES by the AGENCY shall not constitute a waiver by the AGENCY of any remedies of any type it may have against the CONSULTANT for any breach of this AGREEMENT by the CONSULTANT, or for failure of the CONSULTANT to perform SERVICES required of it by the AGENCY.

Forbearance of any rights under the AGREEMENT will not constitute waiver of entitlement to exercise those rights with respect to any future act or omission by the CONSULTANT.

X. Changes of Work

The CONSULTANT shall make such changes and revisions in the completed work of this AGREEMENT as necessary to correct errors appearing therein, without additional compensation thereof. Should the AGENCY find it desirable for its own purposes to have previously satisfactorily completed SERVICES or parts thereof changed or revised, the CONSULTANT shall make such revisions as directed by the AGENCY. This work shall be considered as Extra Work and will be paid for as herein provided under section XIII "Extra Work."

XI. Disputes

Any disputed issue not resolved pursuant to the terms of this AGREEMENT shall be submitted in writing within 10 days to the Director of Public Works or AGENCY Engineer, whose decision in the matter shall be final and binding on the parties of this AGREEMENT; provided however, that if an action is brought challenging the Director of Public Works or AGENCY Engineer's decision, that decision shall be subject to judicial review. If the parties to this AGREEMENT mutually agree, disputes concerning alleged design errors will be conducted under the procedures found in Exhibit "J". In the event that either party deem it necessary to institute legal action or proceeding to enforce any right or obligation under this AGREEMENT, this action shall be initiated in the Superior Court of the State of Washington, situated in the county in which the AGENCY is located. The parties hereto agree that all questions shall be resolved by application of Washington law and that the parties have the right of appeal from such decisions of the Superior Court in accordance with the laws of the State of Washington. The CONSULTANT hereby consents to the personal jurisdiction of the Superior Court of the State of Washington, situated in the county in which the AGENCY is located.

XII. Legal Relations

The CONSULTANT, any sub-consultants, and the AGENCY shall comply with all Federal, State, and local laws, rules, codes, regulations and all AGENCY policies and directives, applicable to the work to be performed under this AGREEMENT. This AGREEMENT shall be interpreted and construed in accordance with the laws of the State of Washington.

The CONSULTANT shall defend, indemnify, and hold the State of Washington (STATE) and the AGENCY and their officers and employees harmless from all claims, demands, or suits at law or equity arising in whole or in part from the negligence of, or the breach of any obligation under this AGREEMENT by, the CONSULTANT or the CONSULTANT's agents, employees, sub consultants, subcontractors or vendors, of any tier, or any other persons for whom the CONSULTANT may be legally liable; provided that nothing herein shall require a CONSULTANT

to defend or indemnify the STATE and the AGENCY and their officers and employees against and hold harmless the STATE and the AGENCY and their officers and employees from claims, demands or suits based solely upon the negligence of, or breach of any obligation under this AGREEMENT by the STATE and the AGENCY, their agents, officers, employees, sub-consultants, subcontractors or vendors, of any tie , or any other persons for whom the STATE and /or the AGENCY may be legally liable; and provided further that if the claims or suits are caused by or result from the concurrent negligence of (a) the CONSULTANT or the CONSULTANT's agents, employees, sub-consultants, subcontractors or vendors, of any tier, or any other persons for whom the CONSULTANT is legally liable, and (b) the STATE and/or AGENCY, their agents, officers, employees, sub-consultants, subcontractors and or vendors, of any tier, or any other persons for whom the STATE and/or AGENCY may be legally liable, the defense and indemnity obligation shall be valid and enforceable only to the extent of the CONSULTANT's negligence or the negligence of the CONSULTANT's agents, employees, sub-consultants, subcontractors or vendors, of any tier, or any other persons for whom the CONSULTANT may be legally liable. This provision shall be included in any AGREEMENT between CONSULTANT and any sub-consultant, subcontractor and vendor, of any tier.

The CONSULTANT shall also defend, indemnify, and hold the STATE and the AGENCY and their officers and employees harmless from all claims, demands, or suits at law or equity arising in whole or in part from the alleged patent or copyright infringement or other allegedly improper appropriation or use of trade secrets, patents, proprietary information, know-how, copyright rights or inventions by the CONSULTANT or the CONSULTANT's agents, employees, sub-consultants, subcontractors or vendors, of any tier, or any other persons for whom the CONSULTANT may be legally liable, in performance of the Work under this AGREEMENT or arising out of any use in connection with the AGREEMENT of methods, processes, designs, information or other items furnished or communicated to STATE and/or the AGENCY, their agents, officers and employees pursuant to the AGREEMENT; provided that this indemnity shall not apply to any alleged patent or copyright infringement or other allegedly improper appropriation or use of trade secrets, patents, proprietary information, know-how, copyright rights or inventions resulting from STATE and/or AGENCY's, their agents', officers and employees' failure to comply with specific written instructions regarding use provided to STATE and/or AGENCY, their agents, officers and employees by the CONSULTANT, its agents, employees, sub-consultants, subcontractors or vendors, of any tier, or any other persons for whom the CONSULTANT may be legally liable.

The CONSULTANT's relation to the AGENCY shall be at all times as an independent contractor.

Notwithstanding any determination by the Executive Ethics Board or other tribunal, the AGENCY may, in its sole discretion, by written notice to the CONSULTANT terminate this AGREEMENT if it is found after due notice and examination by the AGENCY that there is a violation of the Ethics in Public Service Act, Chapter 42.52 RCW; or any similar statute involving the CONSULTANT in the procurement of, or performance under, this AGREEMENT.

The CONSULTANT specifically assumes potential liability for actions brought by the CONSULTANT's own employees or its agents against the STATE and/or the AGENCY and, solely for the purpose of this indemnification and defense, the CONSULTANT specifically waives any immunity under the state industrial insurance law, Title 51 RCW. The Parties have mutually negotiated this waiver.

Unless otherwise specified in this AGREEMENT, the AGENCY shall be responsible for administration of construction contracts, if any, on the project. Subject to the processing of a new sole source, or an acceptable supplemental AGREEMENT, the CONSULTANT shall provide On-Call assistance to the AGENCY during contract administration. By providing such assistance, the CONSULTANT shall assume no responsibility for proper construction techniques, job site safety, or any construction contractor's failure to perform its work in accordance with the contract documents.

The CONSULTANT shall obtain and keep in force during the terms of this AGREEMENT, or as otherwise required, the following insurance with companies or through sources approved by the State Insurance Commissioner pursuant to Title 48 RCW.

Insurance Coverage

A. Worker's compensation and employer's liability insurance as required by the STATE.

B. Commercial general liability insurance written under ISO Form CG 00 01 12 04 or its equivalent with minimum limits of one million dollars ($1,000,000.00) per occurrence and two million dollars ($2,000,000.00) in the aggregate for each policy period.

C. Business auto liability insurance written under ISO Form CG 00 01 10 01 or equivalent providing coverage for any "Auto" (Symbol 1) used in an amount not less than a one million dollar ($1,000,000.00) combined single limit for each occurrence.

Excepting the Worker's Compensation Insurance and any Professional Liability Insurance, the STATE and AGENCY, their officers, employees, and agents will be named on all policies of CONSULTANT and any sub-consultant and/or subcontractor as an additional insured (the "AIs"), with no restrictions or limitations concerning products and completed operations coverage. This coverage shall be primary coverage and non-contributory and any coverage maintained by the AIs shall be excess over, and shall not contribute with, the additional insured coverage required hereunder. The CONSULTANT's and the sub-consultant's and/or subcontractor's insurer shall waive any and all rights of subrogation against the AIs. The CONSULTANT shall furnish the AGENCY with verification of insurance and endorsements required by this AGREEMENT. The AGENCY reserves the right to require complete, certified copies of all required insurance policies at any time.

All insurance shall be obtained from an insurance company authorized to do business in the State of Washington. The CONSULTANT shall submit a verification of insurance as outlined above within fourteen (14) days of the execution of this AGREEMENT to:

Name: Integrated Capital Management

Agency: City of Spokane

Address: 808 W Spokane Falls Blvd

City: Spokane State: WA Zip: 99201

Email: tkimbrell@spokanecity.org

Phone: 509-625-6733

Facsimile: n/a

No cancellation of the foregoing policies shall be effective without thirty (30) days prior notice to the AGENCY.

The CONSULTANT's professional liability to the AGENCY, including that which may arise in reference to section IX "Termination of Agreement" of this AGREEMENT, shall be limited to the accumulative amount of the authorized AGREEMENT or one million dollars ($1,000,000.00), whichever is greater, unless the limit of liability is increased by the AGENCY pursuant to Exhibit H. In no case shall the CONSULTANT's professional liability to third parties be limited in any way.

The parties enter into this AGREEMENT for the sole benefit of the parties, and to the exclusion of any third party, and no third party beneficiary is intended or created by the execution of this AGREEMENT.

The AGENCY will pay no progress payments under section V "Payment Provisions" until the CONSULTANT has fully complied with this section. This remedy is not exclusive; and the AGENCY may take such other action as is available to it under other provisions of this AGREEMENT, or otherwise in law.

XIII. Extra Work

A. The AGENCY may at any time, by written order, make changes within the general scope of this AGREEMENT in the SERVICES to be performed.

B. If any such change causes an increase or decrease in the estimated cost of, or the time required for, performance of any part of the SERVICES under this AGREEMENT, whether or not changed by the order, or otherwise affects any other terms and conditions of this AGREEMENT, the AGENCY shall make an equitable adjustment in the: (1) maximum amount payable; (2) delivery or completion schedule, or both; and (3) other affected terms and shall modify this AGREEMENT accordingly.

C. The CONSULTANT must submit any "request for equitable adjustment," hereafter referred to as "CLAIM," under this clause within thirty (30) days from the date of receipt of the written order. However, if the AGENCY decides that the facts justify it, the AGENCY may receive and act upon a CLAIM submitted before final payment of this AGREEMENT.

D. Failure to agree to any adjustment shall be a dispute under the section XI "Disputes" clause. However, nothing in this clause shall excuse the CONSULTANT from proceeding with the AGREEMENT as changed.

E. Notwithstanding the terms and conditions of paragraphs (A.) and (B.) above, the maximum amount payable for this AGREEMENT, shall not be increased or considered to be increased except by specific written supplement to this AGREEMENT.

XIV. Endorsement of Plans

If applicable, the CONSULTANT shall place their endorsement on all plans, estimates, or any other engineering data furnished by them.

XV. Federal Review

The Federal Highway Administration shall have the right to participate in the review or examination of the SERVICES in progress.

XVI. Certification of the Consultant and the Agency

Attached hereto as Exhibit "G-1(a and b)" are the Certifications of the CONSULTANT and the AGENCY, Exhibit "G-2" Certification Regarding Debarment, Suspension and Other Responsibility Matters - Primary Covered Transactions, Exhibit "G-3" Certification Regarding the Restrictions of the Use of Federal Funds for Lobbying and Exhibit "G-4" Certificate of Current Cost or Pricing Data. Exhibit "G-3" is required only in AGREEMENTS over one hundred thousand dollars ($100,000.00) and Exhibit "G-4" is required only in AGREEMENTS over five hundred thousand dollars ($500,000.00.) These Exhibits must be executed by the CONSULTANT, and submitted with the master AGREEMENT, and returned to the AGENCY at the address listed in section III "General Requirements" prior to its performance of any SERVICES under this AGREEMENT.

XVII. Complete Agreement

This document and referenced attachments contain all covenants, stipulations, and provisions agreed upon by the parties. No agent, or representative of either party has authority to make, and the parties shall not be bound by or be liable for, any statement, representation, promise or agreement not set forth herein. No changes, amendments, or modifications of the terms hereof shall be valid unless reduced to writing and signed by the parties as a supplement to this AGREEMENT.

XVIII. Execution and Acceptance

This AGREEMENT may be simultaneously executed in several counterparts, each of which shall be deemed to be an original having identical legal effect. The CONSULTANT does hereby ratify and adopt all statements, representations, warranties, covenants, and AGREEMENT's contained in the proposal, and the supporting material submitted by the CONSULTANT, and does hereby accept this AGREEMENT and agrees to all of the terms and conditions thereof.

XIX. Protection of Confidential Information

The CONSULTANT acknowledges that some of the material and information that may come into its possession or knowledge in connection with this AGREEMENT or its performance may consist of information that is exempt from disclosure to the public or other unauthorized persons under either chapter 42.56 RCW or other local, state, or federal statutes ("State's Confidential Information"). The "State's Confidential Information" includes, but is not limited to, names, addresses, Social Security numbers, e-mail addresses, telephone numbers, financial profiles credit card information, driver's license numbers, medical data, law enforcement records (or any other information identifiable to an individual), STATE and AGENCY source code or object code, STATE and AGENCY security data, non-public Specifications, STATE and AGENCY non-publicly available data, proprietary software, STATE and AGENCY security data, or information which may jeopardize any part of the project that relates to any of these types of information. The CONSULTANT agrees to hold the State's Confidential Information in strictest confidence and not to make use of the State's Confidential Information for any purpose other than the performance of this AGREEMENT, to release it only to authorized employees, sub-consultants or subcontractors requiring such information for the purposes of carrying out this AGREEMENT, and not to release, divulge, publish, transfer, sell, disclose, or otherwise make it known to any other party without the AGENCY's express written consent or as provided by law. The CONSULTANT agrees to release such information or material only to employees, sub-consultants or subcontractors who have signed a nondisclosure AGREEMENT, the terms of which have been previously approved by the AGENCY. The CONSULTANT agrees to implement physical, electronic, and managerial safeguards to prevent unauthorized access to the State's Confidential Information.

Immediately upon expiration or termination of this AGREEMENT, the CONSULTANT shall, at the AGENCY's option: (i) certify to the AGENCY that the CONSULTANT has destroyed all of the State's Confidential Information; or (ii) returned all of the State's Confidential Information to the AGENCY; or (iii) take whatever other steps the AGENCY requires of the CONSULTANT to protect the State's Confidential Information.

As required under Executive Order 00-03, the CONSULTANT shall maintain a log documenting the following: the State's Confidential Information received in the performance of this AGREEMENT; the purpose(s) for which the State's Confidential Information was received; who received, maintained, and used the State's Confidential Information; and the final disposition of the State's Confidential Information. The CONSULTANT's records shall be subject to inspection, review, or audit upon reasonable notice from the AGENCY.

The AGENCY reserves the right to monitor, audit, or investigate the use of the State's Confidential Information collected, used, or acquired by the CONSULTANT through this AGREEMENT. The monitoring, auditing, or investigating may include, but is not limited to, salting databases.

Violation of this section by the CONSULTANT or its sub-consultants or subcontractors may result in termination of this AGREEMENT and demand for return of all State's Confidential Information, monetary damages, or penalties

It is understood and acknowledged that the CONSULTANT may provide the AGENCY with information, which is proprietary and/or confidential during the term of this AGREEMENT. The parties agree to maintain the confidentiality of such information during the term of this AGREEMENT and afterwards. All materials containing such proprietary and/or confidential information shall be clearly identified and marked as "Confidential" and shall be returned to the disclosing party at the conclusion of the SERVICES under this AGREEMENT.

The CONSULTANT shall provide the AGENCY with a list of all information and materials it considers confidential and/or proprietary in nature: (a) at the commencement of the term of this AGREEMENT, or (b) as soon as such confidential or proprietary material is developed. "Proprietary and/or confidential information" is not meant to include any information which, at the time of its disclosure: (i) is already known to the other party; (ii) is rightfully disclosed to one of the parties by a third party that is not acting as an agent or representative for the other party; (iii) is independently developed by or for the other party; (iv) is publicly known; or (v) is generally utilized by unaffiliated third parties engaged in the same business or businesses as the CONSULTANT.

The parties also acknowledge that the AGENCY is subject to Washington State and federal public disclosure laws. As such, the AGENCY shall maintain the confidentiality of all such information marked proprietary and or confidential or otherwise exempt, unless such disclosure is required under applicable state or federal law. If a public disclosure request is made to view materials identified as "Proprietary and/or confidential information" or otherwise exempt information, the AGENCY will notify the CONSULTANT of the request and of the date that such records will be released to the requester unless the CONSULTANT obtains a court order from a court of competent jurisdiction enjoining that disclosure. If the CONSULTANT fails to obtain the court order enjoining disclosure, the AGENCY will release the requested information on the date specified.

The CONSULTANT agrees to notify the sub-consultant of any AGENCY communication regarding disclosure that may include a sub-consultant's proprietary and/or confidential information. The CONSULTANT notification to the sub-consultant will include the date that such records will be released by the AGENCY to the requester and state that unless the sub-consultant obtains a court order from a court of competent jurisdiction enjoining that disclosure the AGENCY will release the requested information. If the CONSULTANT and/or sub-consultant fail to obtain a court order or other judicial relief enjoining the AGENCY by the release date, the CONSULTANT shall waive and release and shall hold harmless and indemnify the AGENCY from all claims of actual or alleged damages, liabilities, or costs associated with the AGENCY's said disclosure of sub-consultants' information.

XX. Records Maintenance

During the progress of the Work and SERVICES provided hereunder and for a period of not less than six (6) years from the date of final payment to the CONSULTANT, the CONSULTANT shall keep, retain, and maintain all "documents" pertaining to the SERVICES provided pursuant to this AGREEMENT. Copies of all "documents" pertaining to the SERVICES provided hereunder shall be made available for review at the CONSULTANT's place of business during normal working hours. If any litigation, claim, or audit is commenced, the CONSULTANT shall cooperate with AGENCY and assist in the production of all such documents. "Documents" shall be retained until all litigation, claims or audit findings have been resolved even though such litigation, claim, or audit continues past the six (6) year retention period.

For purposes of this AGREEMENT, "documents" means every writing or record of every type and description, including electronically stored information ("ESI"), that is in the possession, control, or custody of the CONSULTANT, including, without limitation, any and all correspondences, contracts, AGREEMENTs, appraisals, plans, designs, data, surveys, maps, spreadsheets, memoranda, stenographic or handwritten notes, reports, records, telegrams, schedules, diaries, notebooks, logbooks, invoices, accounting records, work sheets, charts, notes, drafts, scribblings, recordings, visual displays, photographs, minutes of meetings, tabulations, computations, summaries, inventories, and writings regarding conferences, conversations or telephone conversations, and any and all other taped, recorded, written, printed or typed matters of any kind or description; every copy of the foregoing whether or not the original is in the possession, custody, or control of the CONSULTANT, and every copy of any of the foregoing, whether or not such copy is a copy identical to an original, or whether or not such copy contains any commentary or notation whatsoever that does not appear on the original.

For purposes of this AGREEMENT, "ESI" means any and all computer data or electronic recorded media of any kind, including "Native Files", that are stored in any medium from which it can be retrieved and examined, either directly or after translation into a reasonably useable form. ESI may include information and/or documentation stored in various software programs such as Email, Outlook, Word, Excel, Access, Publisher, PowerPoint, Adobe Acrobat, SQL databases, or any other software or electronic communication programs or databases that the CONSULTANT may use in the performance of its operations. ESI may be located on network servers, backup tapes, smart phones, thumb drives, CDs, DVDs, floppy disks, work computers, cell phones, laptops, or any other electronic device that CONSULTANT uses in the performance of its Work or SERVICES hereunder, including any personal devices used by the CONSULTANT or any sub-consultant at home.

"Native files" are a subset of ESI and refer to the electronic format of the application in which such ESI is normally created, viewed, and /or modified

The CONSULTANT shall include this section XX "Records Maintenance" in every subcontract it enters into in relation to this AGREEMENT and bind the sub-consultant to its terms, unless expressly agreed to otherwise in writing by the AGENCY prior to the execution of such subcontract.

In witness whereof, the parties hereto have executed this AGREEMENT as of the day and year shown in the "Execution Date" box on page one (1) of this AGREEMENT.

Signature	Date
Signature	Date

Any modification, change, or reformation of this AGREEMENT shall require approval as to form by the Office of the Attorney General.

Exhibit A
Scope of Work

Project No. CDS-3891(014)

See attached statement of work for Request for Qualifications (RFQu 6489-26).

Exhibit B
DBE Participation Plan

In the absents of a mandatory DBE goal, a voluntary SBE goal amount of ten percent of the Consultant Agreement is established. The Consultant shall develop a SBE Participation Plan prior to commencing work. Although the goal is voluntary, the outreach efforts to provide SBE maximum practicable opportunities are not.

Exhibit C
Preparation and Delivery of Electronic Engineering and Other Data

In this Exhibit the agency, as applicable, is to provide a description of the format and standards the consultant is to use in preparing electronic files for transmission to the agency. The format and standards to be provided may include, but are not limited to, the following:

I. Surveying, Roadway Design & Plans Preparation Section

A. Survey Data

Civil 3D/AutoCAD/PDF as appropriate.

B. Roadway Design Files

Civil 3D/AutoCAD/PDF as appropriate.

C. Computer Aided Drafting Files

Civil 3D/AutoCAD/PDF as appropriate.

D. Specify the Agency's Right to Review Product with the Consultant

As requested by Agency.

E. Specify the Electronic Deliverables to Be Provided to the Agency

All items to be delivered electronic

F. Specify What Agency Furnished Services and Information Is to Be Provided

See attached RFQu.

II. Any Other Electronic Files to Be Provided

As needed.

III. Methods to Electronically Exchange Data

Email or FTP.

A. Agency Software Suite

Industry Standard.

B. Electronic Messaging System

Indusrty Standard.

C. File Transfers Format

Civil 3D/AutoCAD/PDF as appropriate.

Exhibit D
Prime Consultant Cost Computations

See attached.

Exhibit E
Sub-consultant Cost Computations

If no sub-consultant participation listed at this time. The CONSULTANT shall not sub-contract for the performance of any work under this AGREEMENT without prior written permission of the AGENCY. Refer to section VI "Sub-Contracting" of this AGREEMENT.

APPENDIX A

During the performance of this contract, the contractor, for itself, its assignees, and successors in interest (hereinafter referred to as the "contractor") agrees as follows:

1. **Compliance with Regulations:** The contractor (hereinafter includes consultants) will comply with the Acts and the Regulations relative to Non-discrimination in Federally-assisted programs of the U.S. Department of Transportation, ***(Federal Highway Administration)***, as they may be amended from time to time, which are herein incorporated by reference and made a part of this contract.

2. **Non-discrimination:** The contractor, with regard to the work performed by it during the contract, will not discriminate on the grounds of race, color, or national origin in the selection and retention of subcontractors, including procurements of materials and leases of equipment. The contractor will not participate directly or indirectly in the discrimination prohibited by the Acts and the Regulations, including employment practices when the contract covers any activity, project, or program set forth in Appendix B of 49 CFR Part 21. ***[Include Washington State Department of Transportation specific program requirements.]***

3. **Solicitations for Subcontracts, Including Procurements of Materials and Equipment:** In all solicitations, either by competitive bidding, or negotiation made by the contractor for work to be performed under a subcontract, including procurements of materials, or leases of equipment, each potential subcontractor or supplier will be notified by the contractor of the contractor's obligations under this contract and the Acts and the Regulations relative to Non-discrimination on the grounds of race, color, or national origin. ***[Include Washington State Department of Transportation specific program requirements.]***

4. **Information and Reports:** The contractor will provide all information and reports required by the Acts, the Regulations, and directives issued pursuant thereto and will permit access to its books, records, accounts, other sources of information, and its facilities as may be determined by the Recipient or the ***(Federal Highway Administration)*** to be pertinent to ascertain compliance with such Acts, Regulations, and instructions. Where any information required of a contractor is in the exclusive possession of another who fails or refuses to furnish the information, the contractor will so certify to the Recipient or the ***(Federal Highway Administration)***, as appropriate, and will set forth what efforts it has made to obtain the information.

5. **Sanctions for Noncompliance:** In the event of a contractor's noncompliance with the Non- discrimination provisions of this contract, the Recipient will impose such contract sanctions as it or the ***(Federal Highway Administration)*** may determine to be appropriate, including, but not limited to:

    a. withholding payments to the contractor under the contract until the contractor complies; and/or
    b. cancelling, terminating, or suspending a contract, in whole or in part.

6. **Incorporation of Provisions:** The contractor will include the provisions of paragraphs one through six in every subcontract, including procurements of materials and leases of equipment, unless exempt by the Acts, the Regulations and directives issued pursuant thereto. The contractor will take action with respect to any subcontract or procurement as the Recipient or the ***(Federal Highway Administration)*** may direct as a means of enforcing such provisions including sanctions for noncompliance. Provided, that if the contractor becomes involved in, or is threatened with litigation by a subcontractor, or supplier because of such direction, the contractor may request the Recipient to enter into any litigation to protect the interests of the Recipient. In addition, the contractor may request the United States to enter into the litigation to protect the interests of the United States.

APPENDIX E

During the performance of this contract, the contractor, for itself, its assignees, and successors in interest (hereinafter referred to as the "contractor") agrees to comply with the following non-discrimination statutes and authorities; including but not limited to:

Pertinent Non-Discrimination Authorities:

- Title VI of the Civil Rights Act of 1964 (42 U.S.C. § 2000d et seq., 78 stat. 252), (prohibits discrimination on the basis of race, color, national origin); and 49 CFR Part 21.
- The Uniform Relocation Assistance and Real Property Acquisition Policies Act of 1970, (42 U.S.C. § 4601), (prohibits unfair treatment of persons displaced or whose property has been acquired because of Federal or Federal-aid programs and projects);
- Federal-Aid Highway Act of 1973, (23 U.S.C. § 324 et seq.), (prohibits discrimination on the basis of sex);
- Section 504 of the Rehabilitation Act of 1973, (29 U.S.C. § 794 et seq.), as amended, (prohibits discrimination on the basis of disability); and 49 CFR Part 27;
- The Age Discrimination Act of 1975, as amended, (42 U.S.C. § 6101 et seq.), (prohibits discrimination on the basis of age);
- Airport and Airway Improvement Act of 1982, (49 USC § 471, Section 47123), as amended, (prohibits discrimination based on race, creed, color, national origin, or sex);
- The Civil Rights Restoration Act of 1987, (PL 100-209), (Broadened the scope, coverage and applicability of Title VI of the Civil Rights Act of 1964, The Age Discrimination Act of 1975 and Section 504 of the Rehabilitation Act of 1973, by expanding the definition of the terms "programs or activities" to include all of the programs or activities of the Federal-aid recipients, sub-recipients and contractors, whether such programs or activities are Federally funded or not);
- Titles II and III of the Americans with Disabilities Act, which prohibit discrimination on the basis of disability in the operation of public entities, public and private transportation systems, places of public accommodation, and certain testing entities (42 U.S.C. §§ 12131-12189) as implemented by Department of Transportation regulations at 49 C.F.R. parts 37 and 38;
- The Federal Aviation Administration's Non-discrimination statute (49 U.S.C. § 47123) (prohibits discrimination on the basis of race, color, national origin, and sex);
- Executive Order 12898, Federal Actions to Address Environmental Justice in Minority Populations and Low-Income Populations, which ensures discrimination against minority populations by discouraging programs, policies, and activities with disproportionately high and adverse human health or environmental effects on minority and low-income populations;
- Executive Order 13166, Improving Access to Services for Persons with Limited English Proficiency, and resulting agency guidance, national origin discrimination includes discrimination because of limited English proficiency (LEP). To ensure compliance with Title VI, you must take reasonable steps to ensure that LEP persons have meaningful access to your programs (70 Fed. Reg. at 74087 to 74100);
- Title IX of the Education Amendments of 1972, as amended, which prohibits you from discriminating because of sex in education programs or activities (20 U.S.C. 1681 et seq).

Exhibit G
Certification Document

Exhibit G-1(a)	Certification of Consultant
Exhibit G-1(b)	Certification of Public Works Director
Exhibit G-2	Certification Regarding Debarment, Suspension and Other Responsibility Matters - Primary Covered Transactions
Exhibit G-3	Certification Regarding the Restrictions of the Use of Federal Funds for Lobbying
Exhibit G-4	Certificate of Current Cost or Pricing Data

Exhibit G-1(a) Certification of Consultant

I hereby certify that I am the and duly authorized representative of the firm of

Coffman Engineers, Inc.

whose address is

221 N. Wall St, Suite 500, Spokane WA 99201

and that neither the above firm nor I have

a) Employed or retained for a commission, percentage, brokerage, contingent fee, or other consideration, any firm or person (other than a bona fide employee working solely for me or the above CONSULTANT) to solicit or secure this AGREEMENT;

b) Agreed, as an express or implied condition for obtaining this contract, to employ or retain the services of any firm or person in connection with carrying out this AGREEMENT; or

c) Paid, or agreed to pay, to any firm, organization or person (other than a bona fide employee working solely for me or the above CONSULTANT) any fee, contribution, donation, or consideration of any kind for, or in connection with, procuring or carrying out this AGREEMENT; except as hereby expressly stated (if any);

I acknowledge that this certificate is to be furnished to the City of Spokane and the Federal Highway Administration, U.S. Department of Transportation in connection with this AGREEMENT involving participation of Federal-aid highway funds, and is subject to applicable State and Federal laws, both criminal and civil.

Coffman Engineers, Inc.

Consultant (Firm Name)

Signature (Authorized Official of Consultant)

Date

Exhibit G-1(b) Certification of Public Work Director

I hereby certify that I am the:

[x] Public Works Director

[ ] Other

of the City of Spokane, and Coffman Engineers, Inc.

or its representative has not been required, directly or indirectly as an express or implied condition in connection with obtaining or carrying out this AGREEMENT to:

a) Employ or retain, or agree to employ to retain, any firm or person; o

b) Pay, or agree to pay, to any firm, person, or organization, any fee, contribution, donation, or consideration of any kind; except as hereby expressly stated (if any):

I acknowledge that this certificate is to be furnished to the WSDOT

and the Federal Highway Administration, U.S. Department of Transportation, in connection with this AGREEMENT involving participation of Federal-aid highway funds, and is subject to applicable State and Federal laws, both criminal and civil.

Signature

Date

Exhibit G-2 Certification Regarding Debarment Suspension and Other Responsibility Matters - Primary Covered Transactions

I. The prospective primary participant certifies to the best of its knowledge and belief, that it and its principals:

A. Are not presently debarred, suspended, proposed for debarment, declared ineligible, or voluntarily excluded from covered transactions by any Federal department or agency;

B. Have not within a three (3) year period preceding this proposal been convicted of or had a civil judgment rendered against them for commission of fraud or a criminal offense in connection with obtaining, attempting to obtain, or performing a public (Federal, State, or local) transaction or contract under a public transaction; violation of Federal or State anti-trust statues or commission of embezzlement, theft, forgery, bribery, falsification or destruction of records, making false statements, or receiving stolen property;

C. Are not presently indicted for or otherwise criminally or civilly charged by a governmental entity (Federal, State, or local) with commission of any of the offenses enumerated in paragraph (1)(b) of this certification; an

D. Have not within a three (3) year period preceding this application / proposal had one or more public transactions (Federal, State and local) terminated for cause or default.

II. Where the prospective primary participant is unable to certify to any of the statements in this certification such prospective participant shall attach an explanation to this proposal.

Coffman Engineers, Inc.

Consultant (Firm Name)

Signature (Authorized Official of Consultant)

Date

Exhibit G-3 Certification Regarding the Restrictions of the Use of Federal Funds for Lobbying

The prospective participant certifies, by signing and submitting this bid or proposal, to the best of his or her knowledge and belief, that:

1. No Federal appropriated funds have been paid or will be paid, by or on behalf of the undersigned, to any person for influencing or attempting to influence an officer or employee of any Federal agency, a Member of Congress, an officer or employee of Congress, or any employee of a Member of Congress in connection with the awarding of any Federal contract, the making of any Federal grant, the making of any Federal loan, the entering into of any cooperative AGREEMENT, and the extension, continuation, renewal, amendment, or modification of Federal contract, grant, loan or cooperative AGREEMENT.
2. If any funds other than Federal appropriated funds have been paid or will be paid to any person for influencing or attempting to influence an officer or employee of any Federal agency, a Member of Congress, an officer or employee of Congress, or an employee of a Member of Congress in connection with this Federal contract, grant, loan or cooperative AGREEMENT, the undersigned shall complete and submit Standard Form - LLL, "Disclosure Form to Report Lobbying," in accordance with its instructions.

   This certification is a material representation of fact upon which reliance was placed when this transaction was made or entered into. Submission of this certification is a prerequisite for making or entering into this transaction imposed by Section 1352, Title 31, U.S. Code. Any person who fails to file the require certification shall be subject to a civil penalty of not less than $10,000.00, and not more than $100,000.00 for each such failure.

   The prospective participant also agrees by submitting his or her bid or proposal that he or she shall require that the language of this certification be included in all lower tier sub-contracts, which exceed $100,000 and that all such sub-recipients shall certify and disclose accordingly.

Coffman Engineers, Inc.

Consultant (Firm Name)

Signature (Authorized Official of Consultant)

Date

Exhibit G-4 Certification of Current Cost or Pricing Data

This is to certify that, to the best of my knowledge and belief, the cost or pricing data (as defined in section of the Federal Acquisition Regulation (FAR) and required under FAR subsection 15.403-4) submitted, either actually or by specific identification in writing, to the Contracting Officer or to the Contracting Officer's representative in support of Feasibility Study for Monroe Street Physical Suicide Deterrent System * are accurate, complete, and current as of December 1, 2026 **.

This certification includes the cost or pricing data supporting any advance AGREEMENT's and forward pricing rate AGREEMENT's between the offer or and the Government that are part of the proposal.

Firm: Coffman Engineers, Inc.

Signature

Title

Date of Execution _____***:

*Identify the proposal, quotation, request for pricing adjustment, or other submission involved, giving the appropriate identifying number (e.g. project title.)
**Insert the day, month, and year, when price negotiations were concluded and price AGREEMENT was reached.
***Insert the day, month, and year, of signing, which should be as close as practicable to the date when the price negotiations were concluded and the contract price was agreed to.

Exhibit H
Liability Insurance Increase

To Be Used Only If Insurance Requirements Are Increased

The professional liability limit of the CONSULTANT to the AGENCY identified in Section XII, Legal Relations and Insurance of this Agreement is amended to $ n/a .

The CONSULTANT shall provide Professional Liability insurance with minimum per occurrence limits in the amount of $ n/a.

Such insurance coverage shall be evidenced by one of the following methods:

- Certificate of Insurance
- Self-insurance through an irrevocable Letter of Credit from a qualified financial institution

Self-insurance through documentation of a separate fund established exclusively for the payment of professional liability claims, including claim amounts already reserved against the fund, safeguards established for payment from the fund, a copy of the latest annual financial statements, and disclosure of the investment portfolio for those funds.

Should the minimum Professional Liability insurance limit required by the AGENCY as specified above exceed $1 million per occurrence or the value of the contract, whichever is greater, then justification shall be submitted to the Federal Highway Administration (FHWA) for approval to increase the minimum insurance limit.

If FHWA approval is obtained, the AGENCY may, at its own cost, reimburse the CONSULTANT for the additional professional liability insurance required.

Notes: Cost of added insurance requirements: $ n/a.

- Include all costs, fee increase, premiums.
- This cost shall not be billed against an FHWA funded project.
- For final contracts, include this exhibit

n/a

Exhibit I
Alleged Consultant Design Error Procedures

The purpose of this exhibit is to establish a procedure to determine if a consultant has alleged design error is of a nature that exceeds the accepted standard of care. In addition, it will establish a uniform method for the resolution and/or cost recovery procedures in those instances where the agency believes it has suffered some material damage due to the alleged error by the consultant.

Step 1 Potential Consultant Design Error(s) is Identified by Agency's Project Manager

At the first indication of potential consultant design error(s), the first step in the process is for the Agency's project manager to notify the Director of Public Works or Agency Engineer regarding the potential design error(s). For federally funded projects, the Region Local Programs Engineer should be informed and involved in these procedures. (Note: The Director of Public Works or Agency Engineer may appoint an agency staff person other than the project manager, who has not been as directly involved in the project, to be responsible for the remaining steps in these procedures.)

Step 2 Project Manager Documents the Alleged Consultant Design Error(s)

After discussion of the alleged design error(s) and the magnitude of the alleged error(s), and with the Director of Public Works or Agency Engineer's concurrence, the project manager obtains more detailed documentation than is normally required on the project. Examples include all decisions and descriptions of work, photographs, records of labor, materials, and equipment.

Step 3 Contact the Consultant Regarding the Alleged Design Error(s)

If it is determined that there is a need to proceed further, the next step in the process is for the project manager to contact the consultant regarding the alleged design error(s) and the magnitude of the alleged error(s). The project manager and other appropriate agency staff should represent the agency and the consultant should be represented by their project manager and any personnel (including sub-consultants) deemed appropriate for the alleged design error(s) issue.

Step 4 Attempt to Resolve Alleged Design Error with Consultant

After the meeting(s) with the consultant have been completed regarding the consultant's alleged design error(s), there are three possible scenarios:

- It is determined via mutual agreement that there is not a consultant design error(s). If this is the case, then the process will not proceed beyond this point.
- It is determined via mutual agreement that a consultant design error(s) occurred. If this is the case, then the Director of Public Works or Agency Engineer, or their representatives, negotiate a settlement with the consultant. The settlement would be paid to the agency or the amount would be reduced from the consultant's agreement with the agency for the services on the project in which the design error took place. The agency is to provide LP, through the Region Local Programs Engineer, a summary of the settlement for review and to make adjustments, if any, as to how the settlement affects federal reimbursements. No further action is required.
- There is not a mutual agreement regarding the alleged consultant design error(s). The consultant may request that the alleged design error(s) issue be forwarded to the Director of Public Works or Agency Engineer for review. If the Director of Public Works or Agency Engineer, after review with their legal counsel, is not able to reach mutual agreement with the consultant, proceed to Step 5.

Step 5 Forward Documents to Local Programs

For federally funded projects, all available information, including costs, should be forwarded through the Region Local Programs Engineer to LP for their review and consultation with the FHWA. LP will meet with representatives of the agency and the consultant to review the alleged design error(s), and attempt to find a resolution to the issue. If necessary, LP will request assistance from the Attorney General's Office for legal interpretation. LP will also identify how the alleged error(s) affects eligibility of project costs for federal reimbursement.

- If mutual agreement is reached, the agency and consultant adjust the scope of work and costs to reflect the agreed upon resolution. LP, in consultation with FHWA, will identify the amount of federal participation in the agreed upon resolution of the issue.
- If mutual agreement is not reached, the agency and consultant may seek settlement by arbitration or by litigation.

Exhibit J
Consultant Claim Procedures

The purpose of this exhibit is to describe a procedure regarding claim(s) on a consultant agreement. The following procedures should only be utilized on consultant claims greater than $1,000. If the consultant's claim(s) total a $1,000 or less, it would not be cost effective to proceed through the outlined steps. It is suggested that the Director of Public Works or Agency Engineer negotiate a fair and reasonable price for the consultant's claim(s) that total $1,000 or less.

This exhibit will outline the procedures to be followed by the consultant and the agency to consider a potential claim by the consultant.

Step 1 Consultant Files a Claim with the Agency Project Manager

If the consultant determines that they were requested to perform additional services that were outside of the agreement's scope of work, they may be entitled to a claim. The first step that must be completed is the request for consideration of the claim to the Agency's project manager.

The consultant's claim must outline the following:

- Summation of hours by classification for each firm that is included in the claim
- Any correspondence that directed the consultant to perform the additional work;
- Timeframe of the additional work that was outside of the project scope;
- Summary of direct labor dollars, overhead costs, profit and reimbursable costs associated with the additional work; and
- Explanation as to why the consultant believes the additional work was outside of the agreement scope of work.

Step 2 Review by Agency Personnel Regarding the Consultant's Claim for Additional Compensation

After the consultant has completed step 1, the next step in the process is to forward the request to the Agency's project manager. The project manager will review the consultant's claim and will met with the Director of Public Works or Agency Engineer to determine if the Agency agrees with the claim. If the FHWA is participating in the project's funding, forward a copy of the consultant's claim and the Agency's recommendation for federal participation in the claim to the WSDOT Local Programs through the Region Local Programs Engineer. If the claim is not eligible for federal participation, payment will need to be from agency funds.

If the Agency project manager, Director of Public Works or Agency Engineer, WSDOT Local Programs (if applicable), and FHWA (if applicable) agree with the consultant's claim, send a request memo, including backup documentation to the consultant to either supplement the agreement, or create a new agreement for the claim. After the request has been approved, the Agency shall write the supplement and/or new agreement and pay the consultant the amount of the claim. Inform the consultant that the final payment for the agreement is subject to audit. No further action in needed regarding the claim procedures.

If the Agency does not agree with the consultant's claim, proceed to step 3 of the procedures.

Step 3 Preparation of Support Documentation Regarding Consultant's Claim(s)

If the Agency does not agree with the consultant's claim, the project manager shall prepare a summary for the Director of Public Works or Agency Engineer that included the following:

- Copy of information supplied by the consultant regarding the claim;
- Agency's summation of hours by classification for each firm that should be included in the claim
- Any correspondence that directed the consultant to perform the additional work;
- Agency's summary of direct labor dollars, overhead costs, profit and reimbursable costs associate with the additional work;
- Explanation regarding those areas in which the Agency does/does not agree with the consultant's claim(s);
- Explanation to describe what has been instituted to preclude future consultant claim(s); and
- Recommendations to resolve the claim.

Step 4 Director of Public Works or Agency Engineer Reviews Consultant Claim and Agency Documentation

The Director of Public Works or Agency Engineer shall review and administratively approve or disapprove the claim, or portions thereof, which may include getting Agency Council or Commission approval (as appropriate to agency dispute resolution procedures). If the project involves federal participation, obtain concurrence from WSDOT Local Programs and FHWA regarding final settlement of the claim. If the claim is not eligible for federal participation, payment will need to be from agency funds.

Step 5 Informing Consultant of Decision Regarding the Claim

The Director of Public Works or Agency Engineer shall notify (in writing) the consultant of their final decision regarding the consultant's claim(s). Include the final dollar amount of the accepted claim(s) and rationale utilized for the decision.

Step 6 Preparation of Supplement or New Agreement for the Consultant's Claim(s)

The agency shall write the supplement and/or new agreement and pay the consultant the amount of the claim. Inform the consultant that the final payment for the agreement is subject to audit

RFQu 6489-26 Feasibility Study for Monroe Street Physical Suicide Deterrent System
City of Spokane

Project Background

The City of Spokane has retained Coffman Engineers, Inc. to perform a feasibility study to identify and evaluate physical suicide deterrent system alternatives for the Monroe Street Bridge. Constructed in 1911 and listed on the National Register of Historic Places, the Monroe Street Bridge is a prominent City landmark and a critical transportation corridor spanning approximately 140 feet above the Spokane River.

The purpose of this study is to identify feasible suicide deterrent solutions while respecting the bridge's historic character, architectural significance, and operational requirements. The study will evaluate physical deterrent alternatives, assess their feasibility and impacts, and provide a clear, documented basis for the selection of a preferred alternative to inform future implementation efforts.

Overall Project Approach

The overall project will be broken down into five phases. The goals of each phase are indicated below:

Phase 1 Project Initiation and Existing Conditions Assessment

Phase 1 establishes project definition, stakeholder alignment, and an understanding of available existing condition information and evaluation criteria, forming the baseline for future alternatives analysis.

Phase 2 Conceptual Alternatives Development

Phase 2 will introduce the project to stakeholders and develop a broad set of technically feasible conceptual alternatives.

Phase 3 Alternatives Screening & Comparative Evaluation

Phase 3 will establish and apply an evaluation framework to compare alternatives and narrow the field to a focused set of viable options**.**

Phase 4 Stakeholder Coordination & Public Engagement Support

Phase 4 will further engage the public and stakeholders to gather feedback and refine alternatives within the evaluation framework.

Phase 5 Preferred Alternative Recommendation & Feasibility Study Documentation

Phase 5 aims to recommend a preferred alternative and deliver the feasibility study, conceptual design for the selected alternative, and final recommendations to the City and identified project stakeholders.

Our project approach is based on the Request for Qualifications, conversations and email correspondence with the City of Spokane, and the scope of services, deliverables, and assumptions described in the following sections of this proposal. Services not expressly included in this scope may be considered additional services and negotiated with the City of Spokane if project needs change.

Owner Provided Information

- Bridge Inspection Reports
- Original Design Drawings
- Retrofit drawings
- Previous studies
- Stakeholder Contact Information

Schedule

The overall project schedule assumes an 18-month duration starting in November of 2026 and concluding by June of 2028. At the time of scoping, we anticipate the following milestone dates:

Milestone	Duration	Date
Project Notice to Proceed		November 2026
Phase 1	5 Months	March 2027
Phase 2	3 Months	June 2027
Phase 3	2 Months	August 2027
Phase 4	5 Months	January 2028
Phase 5	5 Months	June 2028

Design Criteria

We anticipate using the following design criteria:

- AASHTO LRFD Bridge Design Specification 10th Edition
- WSDOT Bridge Design Manual (BDM), Current Edition

Team Members

The consultant team is composed of the following firms:

- Coffman Engineers, Inc.: Prime Consultant, Bridge Engineering Lead and Landscape Architecture, CEI
- Kittelson and Associates: Transportation and Public Involvement Lead, KA
- Gorman Preservation Associates: Historical Preservation Lead, GPA

Scope of Work

The scope of work is broken down into associated tasks:

Task 1: Project Management

- Design and detailing coordination between the consultant team.
- Subconsultant Management
- Coordination between City of Spokane and the design team.
- Track schedule and scope tasks throughout duration of project.
- Provide monthly invoices complying with client's submission requirements.

Assumptions:

- Project invoices will be broken down by tasks outlined in this scope of work. (IE Tasks 1-7)
- Progress reports describing items worked on each period, summary of fees and outstanding coordination items will be included with monthly invoices.

Task 2: Meetings

The following table outlines the anticipated meetings between the project team and the City of Spokane as a baseline for meeting expectations. Specific meetings with external committees, stakeholders and public are included in other tasks. Additional meetings with external committees, stakeholders and public are covered in specific task items.

Recurring Coordination	Setting	Attendees	Assumed Effort
Recurring Monthly Coordination Meeting	Virtual	COS, Consultant Team	(18) Meetings, 1 hour each
Design Team Meeting	Virtual	Consultant Team	(18) Meetings, 1 hour each

Deliverables:

Coffman will provide the following:

- Meeting agendas and minutes for meetings covered in this section.

Task 3: Phase 1 Project Initiation and Existing Conditions Assessment

Scope:

Project Kickoff Meeting

- Coffman will lead the project kickoff meeting between the City of Spokane project team and the consultant team. We anticipate this meeting to consist of a 1-hour in-person meeting hosted at Coffman or City of Spokane meeting spaces followed by a 1-hour site walk as a team.

Technical Advisory Committee (TAC) Meeting:

- Kittelson will prepare for and facilitate one meeting (in person location in Spokane to be determined, 90 minutes) to clearly define project background, purpose, expected outcomes, and initial outreach strategy.
- Consultant team will participate in this TAC Meeting.

Stakeholder/Public Involvement Plan (PIP):

- Kittelson will prepare a five-page strategy for engaging with the stakeholders and the public to include communication protocols, how to best engage the City Council and Mayor, protocols for sharing sensitive information, and appropriate channels for sharing information to stakeholders. The PIP will outline key audiences and core messaging around the project background and scope of the problem to be solved, project timeline and contacts. The PIP will also identify the preliminary list of key stakeholders expected to include, but not be limited to:
    - North Riverbank Developers – Greenstone and L.B. Stone Properties Group
    - Kendall Yards HOA and Business District
    - Downtown Partnership
    - Greater Spokane Incorporated
    - Visit Spokane
    - North Bank and Downtown Businesses
    - Spokane Preservation Advocates
    - Emergency Responders/Law Enforcement
    - Mental Health Organizations
    - Impacted Families
- Consultant Team will participate in (1) messaging training led by Kittelson.

City of Spokane Communications team meeting:

- Kittelson will hold a two-hour, in-person strategy meeting to review and refine the PIP.

Develop a draft introductory Public Information Packet

- Kittelson will develop a PIP that will consist of:
    - Logo and branding for project
    - Online ArcGIS Story Map with comment form
    - PowerPoint Presentation
    - Press Release
    - Two-page flyer for email distribution
    - Social media announcements (3)

Historic Preservation Outreach

- Gorman Preservation will coordinate with the City of Spokane HPD, WSDOT Cultural Staff, and the DAHP Historic Architect to provide input and design review for the historic preservation component of the project. This coordination is intended to inform the agencies (City – owner, WSDOT – lead federal review agency for FHWA funding, and DAHP – state historic preservation review agency) of the project and seek their input regarding the anticipated compliance processes for the feasibility study and future Certificate of Appropriateness (COA) and Section 106 compliance report.

TAC Meeting:

- Kittelson will prepare for and facilitate one meeting (in person, 90 minutes) to review the Public Information Packet.
- Consultant team will participate in this TAC Meeting.

Finalize Public Information Package

Kittelson will finalize the PIP for this stage of the project.

Training on Messaging:

- Hold one-hour virtual training session for consultants and city team on messaging.

Review of Existing Information:

- Coffman will perform a review of existing information associated with the bridge structure such as original design plans, retrofit plans, bridge inspection reports and maintenance records to establish a baseline understanding of the structure.
- Coffman will perform a code review to establish applicable design criteria associated with deterrent systems.
- Coffman will identify possible gaps in data needed to perform structural analysis associated with the development of the feasibility study.
- Coffman Engineers will gather architectural data and bridge-related information for public engagement activities.

Existing Condition Assessment

- Coffman will perform a desktop review of the available bridge condition information, specifically as it relates to attaching a new structure to the existing bridge such as existing barrier, deck soffit and pier faces.
- Kittelson will collect 24-hour traffic counts on the bridge study corridor for vehicles, pedestrians, and bicyclists during a period that represents typical usage (September – Early October and May to June). Counts will be performed on a typical Thursday and Saturday.
- Kittelson will obtain and review crash data from WSDOT along the bridge study corridor.
- Coffman Engineers will gather important “Place Making” information related to our community context, culture, and the river.

Site Investigation

- Coffman will perform site visits and field reviews to compare accessible, visible conditions with available plan details and bridge condition information relevant to attaching a new structure to the existing bridge.
- Gorman Preservation will also conduct an initial site visit to the bridge, documenting the current condition of the bridge to be used in the feasibility study.
- Coffman will provide photo documentation and identify potential structural constraints.

Development of Architectural Base Map

- Coffman will create a scaled base map for the project that includes the limits of work and existing structural features.
- Coffman will develop a site inventory and analysis map that focuses on primary view corridors of the river from the bridge as well as views of the bridge. Access and circulation for the public, EMS, maintenance staff. Features below the bridge include trails, utilities, the

proposed zip line, and the existing gondola. Environmental conditions include wind, solar exposure, and topography.

- Coffman will review comments on the inventory of regional and local plan documents

Development of Evaluation Criteria

- Coffman, in conjunction with the City of Spokane will develop the evaluation criteria to be used for vetting options in future phases of the project.

Deliverables:

- Coordinate, facilitate, and prepare meeting summaries for 2 TAC Meetings
- Facilitate and summarize 1 meeting with Communications Team
- Draft and final Public Information Packet
- Prepare for and facilitate training session.
- Existing Conditions Assessment memo summarizing traffic count results.
- Assist with development of base map (22 x 34)
- *S*ite inventory and analysis graphic (22 x 34)
- Existing Conditions Memorandum:
    - This will consist of a 5-to-7-page memorandum outlining the summary of the existing condition assessment and site investigation efforts and outline potential risk areas associated with the bridge structure.
- Evaluation Criteria

Assumptions:

- The City of Spokane will provide safe and coordinated access to the bridge and surrounding areas for site investigation activities.
- City of Spokane will provide files associated with the bridge and surrounding landmarks including, but not limited to, drawing sets, CAD backgrounds, load rating calculations, rehabilitation calculations and inspection reports.
- Site Investigation will be isolated to areas anticipated to be impacted by implementation of the deterrent system and will be limited to what is accessible without specialized access equipment (e.g., under-bridge inspection units, rope access, lifts, or lane closures/traffic control). No destructive testing, material sampling, load testing, or detailed hands-on inspection is included.
- Traffic counts to be collected at three locations on a Thursday and Saturday: intersections of Monroe St / Main Ave, Monroe St / Spokane Falls Blvd and Monroe St / Summit Parkway (Bridge Ave).
- Phase 1 will include travel costs associated with the landscape architect to participate in the in-person kick-off meeting.

Task 4: Phase 2 Conceptual Alternatives Development

Scope:

Develop Alternatives:

- Coffman will lead the process of developing alternatives, including brainstorming a variety of solution types for a suicide deterrent system. Based on the information available at this feasibility-study stage, the alternatives will be screened to identify concepts that may be unsuitable because of apparent structural limitations, historic preservation considerations, or other evaluation factors. Alternatives retained through the screening process will be further developed as concepts.

Distribute Public Information Package, as necessary.

Interviews:

- Kittelson will prepare for and facilitate up to five in-person, one-hour, one-on-one and/or small group interviews with stakeholders to educate them about the project and understand their perspectives.

TAC Meeting:

- Kittelson will lead one in-person, 90-minute meeting to present initial feedback from outreach and how it will be used to inform alternatives.
- Consultant team will participate in this TAC Meeting.

Concept Development:

- Coffman Engineers will develop three to five alternative concepts to evaluate their potential to meet the purpose and need of the project. This broad range of concepts will begin with those identified by the project team and may include concepts arising through stakeholder and community engagement efforts.
- Coffman will gather and document input from key stakeholders and the public regarding important aspects of the bridge's architectural character.
- Coffman will support preliminary structural concept development.
- Coffman will develop alternative graphics, maps, or renderings.
- Gorman Preservation will research other examples of historic bridge solutions around the U.S. for similar suicide deterrent systems.
- Gorman Preservation will lead reaching out to DAHP and WSDOT for similar examples in Washington state, and consulting with the City HPD for initial concepts.

Technical Feasibility Review

- Coffman will review concept designs for technical feasibility including structural limitations, constructability considerations and operational/maintenance considerations.
- Coffman will develop comparative costs for conceptual designs.
- Coffman will develop comparative construction duration estimates and comparative traffic phasing considerations for conceptual designs, if applicable.
- Kittelson will perform operational traffic analyses for weekday a.m. and weekday p.m. peak hours along the bridge study corridor for temporary (<6 months) and permanent impacts to traffic mobility.

- Gorman Preservation will begin the documentation of the Monroe Street Bridge for the feasibility study.

Deliverables:

- Meeting logistics, agenda, facilitation and summaries for 5 interviews
- Coordinate, facilitate, and prepare meeting summaries for 1 TAC Meeting
- Technical memorandum summarizing operational traffic analyses.
- Up to 3 graphics, maps or renderings. (22 x 34)
- PowerPoint depicting conceptual alternatives and results of technical feasibility review.

Assumptions:

- Initial screening of alternatives will be based on engineering judgment, known constraints, and stakeholder input, and will not involve detailed quantitative analysis.
- Structural concept development will consider applied wind forces developed using AASHTO LRFD codes to determine a baseline of structural member sizes and connections. Wind harmonics or in-depth wind study is not considered for this scope of work.
- Screening criteria and thresholds will be confirmed by the City.
- Cost comparisons will be generalized on a spectrum of least expensive to most expensive.
- Traffic operational analyses limited to the following scenarios:
    - Temporary (<6 months) vehicle lane closure (one lane northbound, one lane southbound)

Assumptions Cont.:

    - Temporary (<6 months) pathway closure (nonconcurrent closure of both pathways).
    - Permanent closure of one or both pathways.

Task 5: Phase 3 Alternatives Screening & Comparative Evaluation

Scope:

TAC Meeting:

- Kittelson will lead one meeting (in person, 90 minutes) to present the range of alternatives and gather feedback.
- Consultant team will participate in this TAC Meeting.

3D Visualizations:

- Kittelson will develop draft 3D visualizations for up to three alternatives for use in communicating with the public.

Update the Public Information Packet (Draft)

Communications Team Meeting:

- Kittelson will hold a two-hour strategy meeting with the Communications Team to review draft updates to the Public Information Packet

Finalize 3D visualizations.

Finalize Public Information Packet updates.

Presentation to Mayor/Council

- Kittelson will lead one presentation to Mayor/Council.
- Consultant team will participate in this meeting.

Cultural Resource Survey Reporting:
Gorman Preservation to continue the Cultural Resources Survey Reporting for the feasibility study.
Development of Evaluation Framework

- In preparation for Choosing by Advantages comparison meetings, Coffman will develop the evaluation matrix and work with the City of Spokane to define priority values.
- Consultant team will provide input from respective disciplines to develop framework.
- The goal of screening the visioning alternatives is to identify the approximate aesthetic character, system type, and location of the deterrent system. Alternatives will be screened using the agreed evaluation criteria to identify those that, based on information available at this feasibility-study stage, appear unlikely to meet the project's purpose and need or may have substantial cost, regulatory, or public acceptance challenges.
- Coffman will provide preliminary PE cost estimates for structural and landscape architecture components.

Choosing by Advantages (CBA)

- Coffman will lead (2) four-hour sessions to complete the weighing of advantages.
- The CBA process is intended to identify up to three options for further refinement based on the completed evaluation and the City's direction.
- Consultant team will participate in these sessions.

Deliverables:

- Draft and final 3D Visualizations (3 per submittal stage)
- Facilitate and summarize 1 meeting with Communications Team
- Draft and final update to Public Information Packet
- Prepare for, facilitate, and provide meeting summary for 1 TAC Meeting
- Presentation to Mayor/Council
- Preparation of Alternatives Summary Memo including summary of phase 3 activity and slide deck for outreach needs.

Task 6: Phase 4 Stakeholder Coordination & Public Engagement Support

Scope:
Displays:

- Kittelson will develop draft and final presentation boards (6) based on Public Information Packet for Open House/Community forums.
- Coffman will develop presentation materials focusing on aesthetic treatments using complementary materials, colors and textures for the deterrent system.

Interviews:

- Kittelson will prepare for and facilitate five in-person, one-hour, one-on-one and/or small group interviews with stakeholders to gather feedback on draft alternatives.
- Coffman will participate in (5) interview meetings led by Kittelson.

Community Open House:

- Kittelson will plan logistics for and host (1) two hour-long open houses at the Central Library to introduce project and range of alternatives for feedback.
- Consultant team will attend this open house.
- Gorman Preservation will assist with facilitation of and participation in the general public open house and will coordinate with the City HPD, WSDOT, and DAHP to identify historic preservation groups, historical societies, museums, and other preservation interests for potential invitation by the entity responsible for event outreach.

Community Forums/Meetings:

- Kittelson will attend two existing community meetings (one hour) to introduce the project and range of alternatives for feedback.
- Consultant team will attend these community forums/meetings.

Prepare outreach summary.

Integrate Feedback:

- Coffman will incorporate feedback from phase 4 activities into alternatives scoring. Coffman will work with stakeholders and the public to identify and consider concerns related to safety, aesthetics, historic preservation, and traffic when developing appropriate architectural components.
- Gorman Preservation will participate in the design revisions in response to public comments to maintain compliance with historic preservation goals, working closely with the City HPD, DAHP, and WSDOT for input in the preferred alternative design.

Deliverables:

- Meeting logistics, agenda, facilitation and summaries for 5 interviews
- Draft and final printed and mounted display boards (6)
- Attendance at 1 Open House, and 2 existing community meetings
- Draft and final outreach summary
- Updated Alternatives Summary

Assumptions:

- Project graphics and concepts to be provided by Coffman/Bernardo Wills in CAD and PDF formats, as appropriate.
- City will advertise open house meetings.
- No fees will be required for Open House meetings.
- Phase 4 will include travel costs associated with the landscape architect to participate in the in-person open house meeting.

Task 7: Phase 5 Preferred Alternative Recommendation & Feasibility Study Documentation

Scope:

Preferred Alternative Selection

- Coffman will synthesize technical and stakeholder input within the CBA matrix, review alignment with project goals and prepare a final recommendation with the support of the consultant team.

Draft Feasibility Report:

- Coffman will develop a draft feasibility report summarizing the project approach, findings, and results
- Consultant Team will provide review of draft Feasibility Report.
- Coffman will provide final graphics, maps or renderings for inclusion into study.
- Gorman Preservation will complete the feasibility study sections pertaining to the historic preservation component.
    - Components of the report will include SOI standards, results of public outreach, historic preservation methodology, recommendations for next steps in terms of historic preservation compliance and local and state regulations.
- Coffman will perform internal QA/QC of the report.
- Consultant team will develop 30% design plans, including development of preliminary traffic control plans and detour routes.

TAC Meeting:

- One meeting (in person, 90 minutes) to review draft plan/recommendations.
- Consultant team will attend this TAC Meeting.

3D Visualization:

- Kittelson will prepare draft and final 3D visualization for selected solution.

Public Information Packet:

- Kittelson will prepare a draft update to the packet to show preferred alternative/recommendations.

Communication Team Meeting:

- Kittelson will hold a two-hour, in-person strategy meeting to review draft updates to the Public Information Packet.

Finalize Public Information Packet

Displays:

- Kittelson will develop draft and final presentation boards (6) based on Public Information Packet for Open House/Community forums.

Community Open House:

- Kittelson will plan logistics for and host one two-hour open house at the Central Library to present the preferred alternative.
- Consultant team will attend this Open House.

Community Forums/Meetings:

- Kittelson will attend two existing community meetings (one hour) to present the preferred alternative.

- Consultant team will attend these Community Forums and meetings.

Prepare outreach summary.

Final Feasibility Report

- Develop final feasibility report summarizing the project approach, findings, and results with final input from project outreach activities.
- Consultant Team will provide review of final Feasibility Report.
- Perform internal QA/QC of the report.
- Finalize 30% design plans.
- Prepare 30% Cost Estimate.

Project Closeout

- Coffman will support the City of Spokane with project closeout procedures.

Deliverables:

- Prepare for, facilitate, and prepare meeting summary for 1 TAC Meeting
- Draft and final 3D Visualization
- Draft and final update to Public Information Packet
- Draft and final printed and mounted display boards (6)
- Attendance at 1 Open House, and 2 existing community meetings
- Draft and final outreach summary
- Draft Feasibility Report
- Development of 30% Design Plans including:
    - 3 to 5 Landscape Architecture drawings
    - 3 to 5 bridge and structural drawings

  1 to 2 preliminary 30% traffic control and detour plans.
- Final Feasibility Report

Assumptions:

- Project graphics and concepts to be provided by Coffman in CAD and PDF formats, as appropriate.
- 30% design plans assume that one system will be selected and applied throughout the bridge structure.
- City will advertise open house meetings.
- No fees will be required for Open House meetings.
- Gorman Preservation will not complete the Certificate of Appropriateness within the scope of this project.
- Gorman Preservation will not complete the Section 106 compliance reporting within the scope of this project.
- Feasibility report will be between 25 and 30 pages.

Engineering Fees

We propose to provide our basic services described above on a Time and Expense Basis.

	Coffman	Kittelson	Gorman	**Total:**
Task 1	$ 25,844.14	$ 2,401.68	$ 352.00	**$ 28,597.82**
Task 2	$ 15,702.41	$ 6,683.04	$ 1,056.00	**$ 23,441.45**
Task 3	$ 24,230.42	$ 21,421.90	$ 5,984.00	**$ 51,636.32**
Task 4	$ 32,565.96	$ 11,936.26	$ 2,640.00	**$ 47,142.22**
Task 5	$ 31,779.11	$ 11,483.66	$ 1,672.00	**$ 44,934.77**
Task 6	$ 12,200.25	$ 15,660.64	$ 704.00	**$ 28,564.89**
Task 7	$ 60,144.02	$ 36,173.94	$ 5,720.00	**$ 102,037.96**
Expenses	$ 1,752.00	$ 4,000.00	$ -	**$ 5,752.00**
Totals:	**$ 204,218.32**	**$ 109,761.12**	**$ 18,128.00**	$ 332,107.44

Reimbursable Expenses

Reimbursable expenses for travel, meals, reproduction, mounting boards, postage/delivery and other eligible expenses are included in our Basic Services fee above.

Agreement Number XXXXX

Feasibility Study for Monroe Street SDS

Project Estimated Hours Summary

Original Agreement

PRIME CONSULTANT - Coffman Engineers, Inc.

Work Elem.	Sub Elem.	Description	Coffman Engineers	Kittelson and Associates	Gorman	Total Hours
Task 1: Project Management			0	0	0	0
	Subconsultant Coordinate		48	0	0	48
	Invoicing		68	8	4	80
	Tracking Schedule and Scope		30	0	0	30
	Design and Detailing Coordination with Team		10	0	0	10
			0	0	0	0
			0	0	0	0
			0	0	0	0
Task 2: Recurring Coordination Meetings			0	0	0	0
	Monthly Recurring Meeting with City		38	12	0	50
	Design Recurring meetings		38	12	12	62
			0	0	0	0
			0	0	0	0
			0	0	0	0
			0	0	0	0
Task 3: Phase 1			0	0	0	0
1.1 Project Setup & Management			0	0	0	0
	1.1.1 Kickoff meeting		22	6	2	30
	1.1.2 Confirm scope, roles, communication plan		2	2	0	4
	1.1.3 Develop project management plan		2	6	0	8
1.2 Pre-Project Preparation			0	0	0	0
	1.2.1 Formation of TAC		0	1	0	1
	1.2.2 Intro Meeting with TAC		6	8	2	16
	1.2.3 Develop Public Information Package		0	50	0	50
	1.2.4 Review of Public Information Package with TAC		4	4	2	10
	1.2.5 Finalize Public Information Package		0	20	0	20
	1.2.6 Messaging Training		5	5	2	12
	1.2.7 Brief City Council and Mayor		0	0	0	0
1.3 Historic Preservation Outreach			0	0	0	0
	1.3.1 Engage FHWA		0	0	4	4
	1.3.2 Engage SHPO		0	0	4	4
	1.3.3 Engage City of Spokane Historic		0	0	8	8
1.4 Existing Information Review			0	0	0	0
	1.4.1 Collect as-builts and prior reports		12	0	0	12
	1.4.2 Review codes/criteria (AASHTO, WSDOT, etc.)		6	0	0	6
	1.4.3 Identify data gaps		4	0	0	4
1.5 Existing Conditions Assessment			0	0	0	0
	1.5.1 Structural condition review		10	8	0	18
	1.5.2 Operational assessment (traffic, users)		0	0	0	0
	1.5.3 Environmental and regulatory constraints		1	0	40	41
1.6 Site Investigation			0	0	0	0
	1.6.1 Site visit / field review		10	0	0	10
	1.6.2 Photo documentation		11	0	0	11
	1.6.3 Identify constraints and risks		9	0	0	9
1.7 Evaluation Criteria Development			0	0	0	0
	1.7.1 Define performance criteria		10	0	2	12
	1.7.2 Define cost/schedule considerations		8	0	2	10
	1.7.3 Confirm criteria with client		4	0	0	4
Task 4 Phase 2			0	0	0	0
2.1 Develop Alternatives			0	8	0	8
	2.1.1 Brainstorm solution types		23	0	4	27
	2.1.2 Screen infeasible options		23	0	4	27
	2.1.3 Define viable alternatives		23	0	4	27
2.2 TAC Engagement			0	6	0	6
	2.2.1 TAC Meeting		6	0	2	8
2.3 Stakeholder Engagement			0	4	0	4
	2.3.1 Distribute Public Information Package		0	0	0	0
	2.3.2 Outreach and Coordination		0	0	0	0
2.4 Historic Preservation			0	0	0	0
	2.4.1 Touchbase with FHWA		0	0	4	4
	2.4.2 Touchbase with SHPO		0	0	4	4
2.5 Concept Development			0	0	0	0
	2.5.1 Concept layouts / sketches		18	0	0	18
	2.5.2 Preliminary structural concepts		10	0	0	10
	2.5.3 Identify key constraints per alternative		6	0	8	14
2.6 Technical Feasibility			0	8	0	8
	2.6.1 Structural feasibility review		9	0	0	9
	2.6.2 Constructability considerations		13	24	0	37
	2.6.3 Operational impacts		3	0	0	3
2.7 Cost & Schedule			0	0	0	0
	2.7.1 Opinion of probable cost		22	0	0	22
	2.7.2 Construction duration estimates		12	0	0	12
	2.7.3 Phasing consideration		4	0	0	4
Task 5 Phase 3			0	0	0	0
3.1 Evaluation Framework			0	2	0	2
	3.1.1 Develop evaluation matrix (CBA)		28	2	2	32
	3.1.2 Define weighting / importance		16	0	0	16
3.2 TAC Engagement			0	6	0	6
	3.2.1 TAC Meeting		4	0	1	5
3.3 Alternative Comparison			0	6	0	6
	3.3.1 Evaluate performance vs criteria		26	6	4	36
	3.3.2 Identify advantages/disadvantages		26	0	4	30
	3.3.3 Refine alternatives		40	0	4	44
3.4 Historic Preservation			0	0	0	0
	3.4.1 Touchbase with FHWA		0	0	2	2
	3.4.2 Touchbase with SHPO		0	0	2	2
3.5 Documentation			0	0	0	0
	3.5.1 Prepare alternatives summary		16	0	0	16
	3.5.2 Develop comparison graphics		7	28	0	35
	3.5.3 Update Public Information Package		0	2	0	2
	3.5.4 Brief Council and Mayor		0	0	0	0
Task 6 Phase 4			0	0	0	0
4.1 General Public Engagement Activities			0	32	0	32
	4.1.1 Development Presentation Boards for Open House		22	16	0	38
	4.1.2 Host Community Open House		16	4	4	24
	4.1.3 Attend existing community forum/meetings		4	0	0	4
4.2 Stakeholder Engagement			0	15	0	15
	4.2.1 One on one/small group meetings		2	0	0	2
4.3 Feedback Integration			0	10	0	10
	4.3.1 Document public input		1	0	0	1
	4.3.2 Integrate feedback into alternatives		10	0	4	14
	4.3.3 Update evaluation results		1	0	0	1
Task 7 Phase 5			0	0	0	0
5.1 Preferred Alternative Selection			0	0	0	0
	5.1.1 Synthesize technical + stakeholder input		0	0	0	0
	5.1.2 Confirm alignment with project goals		0	0	0	0
	5.1.3 Final recommendation		0	0	0	0
5.2 Draft Feasibility Report			0	24	0	24
	5.2.1 Draft report preparation		54	0	0	54
	5.2.2 Internal QA/QC		4	44	0	48
	5.2.3 Develop Draft 30% Design Plans		126	18	0	144
	5.2.4 Finalize 3D Visual		0	28	0	28
	5.2.5 Update Public Information Package		0	4	0	4
	5.2.6 Communication Team strategy Meeting		0	0	0	0
5.3 TAC Meeting			0	8	0	8
	5.3.1 Reporting Final Recommendation		3	0	4	7
5.4 Stakeholder Engagement			0	6	0	6
	5.4.1 Reporting Final Recommendation		4	0	4	8
5.5 General Public Engagement			0	16	0	16
	5.5.1 Community Open House		3	4	4	11
	5.5.2 Existing Community Forums/Meetings		10	0	5	15
5.6 Final Feasibility Report			0	0	0	0
	5.6.1 Final Report		32	0	40	72
	5.6.2 Finalize 30% Design Drawings		100	0	0	100
5.7 Presentation & Closeout			0	20	0	20
	5.7.1 Prepare presentation materials		28	4	4	36
	5.7.2 Present to stakeholders / council		2	0	4	6
	5.7.3 Closeout		20			
		Total	**1,135**	**497**	**206**	**1818**

Feasibility Study for Monroe Street SDS
Project Estimated Cost Summary
Original Agreement
PRIME CONSULTANT - Coffman Engineers, Inc.

Work Elem.	Sub Elem.	Description	Coffman Engineers	Kittelson and Associates	Gorman	Total Cost
Task 1: Project Management			$0.00	$0.00	$0.00	$0.00
		Subconsultant Coordinate	$8,379.35	$0.00	$0.00	$8,379.35
		Invoicing	$10,511.55	$2,401.68	$352.00	$13,265.23
		Tracking Schedule and Scope	$4,829.33	$0.00	$0.00	$4,829.33
		Design and Detailing Coordination with Team	$2,123.91	$0.00	$0.00	$2,123.91
			$0.00	$0.00	$0.00	$0.00
			$0.00	$0.00	$0.00	$0.00
			$0.00	$0.00	$0.00	$0.00
Task 2: Recurring Coordination Meetings			$0.00	$0.00	$0.00	$0.00
		Monthly Recurring Meeting with City	$7,851.21	$3,341.52	$0.00	$11,192.73
		Design Recurring meetings	$7,851.21	$3,341.52	$1,056.00	$12,248.73
			$0.00	$0.00	$0.00	$0.00
			$0.00	$0.00	$0.00	$0.00
			$0.00	$0.00	$0.00	$0.00
			$0.00	$0.00	$0.00	$0.00
Task 3: Phase 1			$0.00	$0.00	$0.00	$0.00
1.1 Project Setup & Management			$0.00	$0.00	$0.00	$0.00
		1.1.1 Kickoff meeting	$4,633.20	$1,399.40	$176.00	$6,208.60
		1.1.2 Confirm scope, roles, communication plan	$424.78	$600.42	$0.00	$1,025.20
		1.1.3 Develop project management plan	$424.78	$1,670.76	$0.00	$2,095.54
1.2 Pre-Project Preparation			$0.00	$0.00	$0.00	$0.00
		1.2.1 Formation of TAC	$0.00	$300.21	$0.00	$300.21
		1.2.2 Intro Meeting with TAC	$1,421.13	$1,483.56	$176.00	$3,080.69
		1.2.3 Develop Public Information Package	$0.00	$8,999.82	$0.00	$8,999.82
		1.2.4 Review of Public Information Package with TAC	$922.95	$929.48	$176.00	$2,028.43
		1.2.5 Finalize Public Information Package	$0.00	$3,405.90	$0.00	$3,405.90
		1.2.6 Messaging Training	$1,111.75	$1,138.43	$176.00	$2,426.18
		1.2.7 Brief City Council and Mayor	$0.00	$0.00	$0.00	$0.00
1.3 Historic Preservation Outreach			$0.00	$0.00	$0.00	$0.00
		1.3.1 Engage FHWA	$0.00	$0.00	$352.00	$352.00
		1.3.2 Engage SHPO	$0.00	$0.00	$352.00	$352.00
		1.3.3 Engage City of Spokane Historic	$0.00	$0.00	$704.00	$704.00
1.4 Existing Information Review			$0.00	$0.00	$0.00	$0.00
		1.4.1 Collect as-builts and prior reports	$2,081.35	$0.00	$0.00	$2,081.35
		1.4.2 Review codes/criteria (AASHTO, WSDOT, etc.)	$1,067.41	$0.00	$0.00	$1,067.41
		1.4.3 Identify data gaps	$764.86	$0.00	$0.00	$764.86
1.5 Existing Conditions Assessment			$0.00	$0.00	$0.00	$0.00
		1.5.1 Structural condition review	$1,817.98	$1,493.92	$0.00	$3,311.90
		1.5.2 Operational assessment (traffic, users)	$0.00	$0.00	$0.00	$0.00
		1.5.3 Environmental and regulatory constraints	$212.39	$0.00	$3,520.00	$3,732.39
1.6 Site Investigation			$0.00	$0.00	$0.00	$0.00
		1.6.1 Site visit / field review	$1,832.26	$0.00	$0.00	$1,832.26
		1.6.2 Photo documentation	$2,007.13	$0.00	$0.00	$2,007.13
		1.6.3 Identify constraints and risks	$1,704.58	$0.00	$0.00	$1,704.58
1.7 Evaluation Criteria Development			$0.00	$0.00	$0.00	$0.00
		1.7.1 Define performance criteria	$1,677.00	$0.00	$176.00	$1,853.00
		1.7.2 Define cost/schedule considerations	$1,463.78	$0.00	$176.00	$1,639.78
		1.7.3 Confirm criteria with client	$663.06	$0.00	$0.00	$663.06
Task 4 Phase 2			$0.00	$0.00	$0.00	$0.00
2.1 Develop Alternatives			$0.00	$0.00	$0.00	$0.00
		2.1.1 Brainstorm solution types	$4,127.31	$2,140.68	$352.00	$6,619.99
		2.1.2 Screen infeasible options	$4,714.18	$0.00	$352.00	$5,066.18
		2.1.3 Define viable alternatives	$4,518.56	$0.00	$352.00	$4,870.56
2.2 TAC Engagement			$0.00	$0.00	$0.00	$0.00
		2.2.1 TAC Meeting	$1,225.51	$1,399.40	$176.00	$2,800.91
2.3 Stakeholder Engagement			$0.00	$0.00	$0.00	$0.00
		2.3.1 Distribute Public Information Package	$0.00	$877.46	$0.00	$877.46
		2.3.2 Outreach and Coordination	$0.00	$0.00	$0.00	$0.00
2.4 Historic Preservation			$0.00	$0.00	$0.00	$0.00
		2.4.1 Touchbase with FHWA	$0.00	$0.00	$352.00	$352.00
		2.4.2 Touchbase with SHPO	$0.00	$0.00	$352.00	$352.00
2.5 Concept Development			$0.00	$0.00	$0.00	$0.00
		2.5.1 Concept layouts / sketches	$3,309.82	$0.00	$0.00	$3,309.82
		2.5.2 Preliminary structural concepts	$1,634.99	$0.00	$0.00	$1,634.99
		2.5.3 Identify key constraints per alternative	$1,225.51	$0.00	$704.00	$1,929.51
2.6 Technical Feasibility			$0.00	$0.00	$0.00	$0.00
		2.6.1 Structural feasibility review	$1,582.35	$1,879.68	$0.00	$3,462.03
		2.6.2 Constructability considerations	$2,578.69	$0.00	$0.00	$2,578.69
		2.6.3 Operational impacts	$674.70	$5,639.04	$0.00	$6,313.74
2.7 Cost & Schedule			$0.00	$0.00	$0.00	$0.00
		2.7.1 Opinion of probable cost	$3,843.19	$0.00	$0.00	$3,843.19
		2.7.2 Construction duration estimates	$2,330.44	$0.00	$0.00	$2,330.44
		2.7.3 Phasing consideration	$800.72	$0.00	$0.00	$800.72
Task 5 Phase 3			$0.00	$0.00	$0.00	$0.00
3.1 Evaluation Framework			$0.00	$0.00	$0.00	$0.00
		3.1.1 Develop evaluation matrix (CBA)	$5,461.60	$469.92	$176.00	$6,107.52
		3.1.2 Define weighting / importance	$3,059.43	$469.92	$0.00	$3,529.35
3.2 TAC Engagement			$0.00	$0.00	$0.00	$0.00
		3.2.1 TAC Meeting	$922.95	$1,399.40	$88.00	$2,410.35
3.3 Alternative Comparison			$0.00	$0.00	$0.00	$0.00
		3.3.1 Evaluate performance vs criteria	$5,085.66	$1,801.26	$352.00	$7,238.92
		3.3.2 Identify advantages/disadvantages	$5,085.66	$1,801.26	$352.00	$7,238.92
		3.3.3 Refine alternatives	$7,399.13	$0.00	$352.00	$7,751.13
3.4 Historic Preservation			$0.00	$0.00	$0.00	$0.00
		3.4.1 Touchbase with FHWA	$0.00	$0.00	$176.00	$176.00
		3.4.2 Touchbase with SHPO	$0.00	$0.00	$176.00	$176.00
3.5 Documentation			$0.00	$0.00	$0.00	$0.00
		3.5.1 Prepare alternatives summary	$3,057.77	$0.00	$0.00	$3,057.77
		3.5.2 Develop comparison graphics	$1,706.91	$0.00	$0.00	$1,706.91
		3.5.3 Update Public Information Package	$0.00	$4,941.48	$0.00	$4,941.48
		3.5.4 Brief Council and Mayor	$0.00	$600.42	$0.00	$600.42
Task 6 Phase 4			$0.00	$0.00	$0.00	$0.00
4.1 General Public Engagement Activities			$0.00	$0.00	$0.00	$0.00
		4.1.1 Development Presentation Boards for Open House	$4,624.02	$5,807.68	$0.00	$10,431.70
		4.1.2 Host Community Open House	$3,911.99	$3,248.84	$352.00	$7,512.83
		4.1.3 Attend existing community forum/meetings	$849.56	$1,200.84	$0.00	$2,050.40
4.2 Stakeholder Engagement			$0.00	$0.00	$0.00	$0.00
		4.2.1 One on one/small group meetings	$424.78	$3,694.70	$0.00	$4,119.48
4.3 Feedback Integration			$0.00	$0.00	$0.00	$0.00
		4.3.1 Document public input	$212.39	$1,708.58	$0.00	$1,920.97
		4.3.2 Integrate feedback into alternatives	$1,965.11	$0.00	$352.00	$2,317.11
		4.3.3 Update evaluation results	$212.39	$0.00	$0.00	$212.39
Task 7 Phase 5			$0.00	$0.00	$0.00	$0.00
5.1 Preferred Alternative Selection			$0.00	$0.00	$0.00	$0.00
		5.1.1 Synthesize technical + stakeholder input	$0.00	$0.00	$0.00	$0.00
		5.1.2 Confirm alignment with project goals	$0.00	$0.00	$0.00	$0.00
		5.1.3 Final recommendation	$0.00	$0.00	$0.00	$0.00
5.2 Draft Feasibility Report			$0.00	$0.00	$0.00	$0.00
		5.2.1 Draft report preparation	$8,873.18	$5,128.52	$0.00	$14,001.70
		5.2.2 Internal QA/QC	$999.66	$0.00	$0.00	$999.66
		5.2.3 Develop Draft 30% Design Plans	$17,533.72	$8,995.52	$0.00	$26,529.24
		5.2.4 Finalize 3D Visual	$0.00	$3,688.42	$0.00	$3,688.42
		5.2.5 Update Public Information Package	$0.00	$4,941.48	$0.00	$4,941.48
		5.2.6 Communication Team strategy Meeting	$0.00	$929.48	$0.00	$929.48
5.3 TAC Meeting			$0.00	$0.00	$0.00	$0.00
		5.3.1 Reporting Final Recommendation	$710.56	$1,624.42	$352.00	$2,686.98
5.4 Stakeholder Engagement			$0.00	$0.00	$0.00	$0.00
		5.4.1 Reporting Final Recommendation	$922.95	$1,154.50	$352.00	$2,429.45
5.5 General Public Engagement			$0.00	$0.00	$0.00	$0.00
		5.5.1 Community Open House	$710.56	$3,248.84	$352.00	$4,311.40
		5.5.2 Existing Community Forums/Meetings	$2,417.47	$1,200.84	$440.00	$4,058.31
5.6 Final Feasibility Report			$0.00	$0.00	$0.00	$0.00
		5.6.1 Final Report	$5,297.86	$0.00	$3,520.00	$8,817.86
		5.6.2 Finalize 30% Design Drawings	$13,791.98	$0.00	$0.00	$13,791.98
5.7 Presentation & Closeout			$0.00	$0.00	$0.00	$0.00
		5.7.1 Prepare presentation materials	$5,409.44	$4,061.08	$352.00	$9,822.52
		5.7.2 Present to stakeholders / council	$498.17	$1,200.84	$352.00	$2,051.01
		5.7.3 Closeout	$2,978.45	$0.00	$0.00	$2,978.45
			$0.00	$0.00	$0.00	$0.00
			$0.00	$0.00	$0.00	$0.00
		Total Labor	**$202,466.32**	**$105,761.12**	**$18,128.00**	**$326,355.44**
		Other Direct Costs	$ 1,752.00	$ 4,000.00	$ -	$ 5,752.00
		Total Estimate	**$ 204,218.32**	**$ 109,761.12**	**$ 18,128.00**	**$332,107.44**

Feasibility Study for Monroe Street SDS
Estimated Hours
Original Agreement

PRIME CONSULTANT - Coffman Engineers, Inc.

			2	3	4	5	6	7	8	9	10	11	12	13	14	15	16	21	22	23		
			$ 264.55	$ 249.92	$ 227.76	$ 212.39	$ 207.93	$ 202.51	$ 177.07	$ 178.41	$ 151.28	$ 132.91	$ 119.14	$ 155.52	$ 130.62	$ 111.17	$ 102.72	$ 106.61	$ 249.09	$ 151.28		
Work Elem.	**Sub Elem.**	**Description**	**Principal I**	**Senior Discipline Manager**	**Senior Discipline Engineer**	**Discipline Manager**	**Senior Project Manager**	**Discipline Engineer**	**Project Manager**	**Senior Engineer**	**Engineer III**	**Engineer II**	**Engineer I - NE**	**Senior Designer**	**Designer III**	**Designer II**	**Designer I**	**Project Coordinator**	**Senior Landscape Architect**	**Landscape Architect II**	**Total Hours**	**Fee**
Task 1: Project Management																					**0**	-
		Subconsultant Coordinate		8		20												20			**48**	8,379.35
		Invoicing		8		20												40			**68**	10,511.55
		Tracking Schedule and Scope		4		10												16			**30**	4,829.33
		Design and Detailing Coordination with Team				10															**10**	2,123.91
																					0	-
																					0	-
																					0	-
Task 2: Recurring Coordination Meetings																					**0**	-
		Monthly Recurring Meeting with City				12					8								14	4	**38**	7,851.21
		Design Recurring meetings				12					8								14	4	**38**	7,851.21
																					0	-
																					0	-
																					0	-
																					0	-
Task 3: Phase 1																					**0**	-
1.1 Project Setup & Management																					**0**	-
	1.1.1	Kickoff meeting				2					2						2	2	14		**22**	4,633.20
	1.1.2	Confirm scope, roles, communication plan				2															**2**	424.78
	1.1.3	Develop project management plan				2															**2**	424.78
1.2 Pre-Project Preparation																					**0**	-
	1.2.1	Formation of TAC																			**0**	-
	1.2.2	Intro Meeting with TAC				2													4		**6**	1,421.13
	1.2.3	Develop Public Information Package																			**0**	-
	1.2.4	Review of Public Information Package with TAC				2													2		**4**	922.95
	1.2.5	Finalize Public Information Package																			**0**	-
	1.2.6	Messaging Training		1		1					1								2		**5**	1,111.75
	1.2.7	Brief City Council and Mayor		0		0															**0**	-
1.3 Historic Preservation Outreach																					**0**	-
	1.3.1	Engage FHWA																			**0**	-
	1.3.2	Engage SHPO																			**0**	-
	1.3.3	Engage City of Spokane Historic																			**0**	-
1.4 Existing Information Review																					**0**	-
	1.4.1	Collect as-builts and prior reports		1		1					4							2	2	2	**12**	2,081.35
	1.4.2	Review codes/criteria (AASHTO, WSDOT, etc.)		1		1					4										**6**	1,067.41
	1.4.3	Identify data gaps		1		1					2										**4**	764.86
1.5 Existing Conditions Assessment																					**0**	-
	1.5.1	Structural condition review		4							4							2			**10**	1,817.98
	1.5.2	Operational assessment (traffic, users)																			**0**	-
	1.5.3	Environmental and regulatory constraints				1															**1**	212.39
1.6 Site Investigation																					**0**	-
	1.6.1	Site visit / field review		2		2					6										**10**	1,832.26
	1.6.2	Photo documentation		1		4					6										**11**	2,007.13
	1.6.3	Identify constraints and risks		1		4					4										**9**	1,704.58
1.7 Evaluation Criteria Development																					**0**	-
	1.7.1	Define performance criteria				2							2					2	2	2	**10**	1,677.00
	1.7.2	Define cost/schedule considerations				2							2						2	2	**8**	1,463.78
	1.7.3	Confirm criteria with client				2							2								**4**	663.06
Task 4 Phase 2																					**0**	-
2.1 Develop Alternatives																					**0**	-
	2.1.1	Brainstorm solution types				1					4								6	12	**23**	4,127.31
	2.1.2	Screen infeasible options				1					4								12	6	**23**	4,714.18
	2.1.3	Define viable alternatives				1					4								10	8	**23**	4,518.56
2.2 TAC Engagement																					**0**	-
	2.2.1	TAC Meeting				2					2								2		**6**	1,225.51
2.3 Stakeholder Engagement																					**0**	-
	2.3.1	Distribute Public Information Package																			**0**	-
	2.3.2	Outreach and Coordination																			**0**	-
2.4 Historic Preservation																					**0**	-
	2.4.1	Touchbase with FHWA																			**0**	-
	2.4.2	Touchbase with SHPO																			**0**	-
2.5 Concept Development																					**0**	-
	2.5.1	Concept layouts / sketches																	6	12	**18**	3,309.82
	2.5.2	Preliminary structural concepts				2					8										**10**	1,634.99
	2.5.3	Identify key constraints per alternative				2					2								2		**6**	1,225.51
2.6 Technical Feasibility																					**0**	-
	2.6.1	Structural feasibility review		1		2					6										**9**	1,582.35
	2.6.2	Constructability considerations		1		2					6								4		**13**	2,578.69
	2.6.3	Operational impacts		1		2															**3**	674.70
2.7 Cost & Schedule																					**0**	-
	2.7.1	Opinion of probable cost		2		2					16								2		**22**	3,843.19
	2.7.2	Construction duration estimates		2		2					6								2		**12**	2,330.44
	2.7.3	Phasing consideration									2								2		**4**	800.72
Task 5 Phase 3																					**0**	-
3.1 Evaluation Framework																					**0**	-
	3.1.1	Develop evaluation matrix (CBA)		4		4					10								6	4	**28**	5,461.60
	3.1.2	Define weighting / importance		4		4					8										**16**	3,059.43
3.2 TAC Engagement																					**0**	-
	3.2.1	TAC Meeting				2					0								2		**4**	922.95
3.3 Alternative Comparison																					**0**	-
	3.3.1	Evaluate performance vs criteria		4		6					12								4		**26**	5,085.66
	3.3.2	Identify advantages/disadvantages		4		6					12								4		**26**	5,085.66
	3.3.3	Refine alternatives		4		6					12								6	12	**40**	7,399.13
3.4 Historic Preservation																					**0**	-
	3.4.1	Touchbase with FHWA																			**0**	-
	3.4.2	Touchbase with SHPO																			**0**	-
3.5 Documentation																					**0**	-
	3.5.1	Prepare alternatives summary		2		4					8								2		**16**	3,057.77
	3.5.2	Develop comparison graphics				1													6		**7**	1,706.91
	3.5.3	Update Public Information Package																			**0**	-
	3.5.4	Brief Council and Mayor																			**0**	-
Task 6 Phase 4																					**0**	-
4.1 General Public Engagement Activities																					**0**	-
	4.1.1	Development Presentation Boards for Open House				2													12	8	**22**	4,624.02
	4.1.2	Host Community Open House				2													14		**16**	3,911.99
	4.1.3	Attend existing community forum/meetings				4															**4**	849.56
4.2 Stakeholder Engagement																					**0**	-
	4.2.1	One on one/small group meetings				2															**2**	424.78
4.3 Feedback Integration																					**0**	-
	4.3.1	Document public input				1															**1**	212.39
	4.3.2	Integrate feedback into alternatives				1													4	5	**10**	1,965.11
	4.3.3	Update evaluation results				1															**1**	212.39
Task 7 Phase 5																					**0**	-
5.1 Preferred Alternative Selection																					**0**	-
	5.1.1	Synthesize technical + stakeholder input																			**0**	-
	5.1.2	Confirm alignment with project goals																			**0**	-
	5.1.3	Final recommendation																			**0**	-
5.2 Draft Feasibility Report																					**0**	-
	5.2.1	Draft report preparation				8					26						8	4	8		**54**	8,873.18
	5.2.2	Internal QA/QC		4																	**4**	999.66
	5.2.3	Develop Draft 30% Design Plans									22						60	4	16	24	**126**	17,533.72
	5.2.4	Finalize 3D Visual																			**0**	-
	5.2.5	Update Public Information Package																			**0**	-
	5.2.6	Communication Team strategy Meeting																			**0**	-
5.3 TAC Meeting																					**0**	-
	5.3.1	Reporting Final Recommendation				1													2		**3**	710.56
5.4 Stakeholder Engagement																					**0**	-
	5.4.1	Reporting Final Recommendation				2													2		**4**	922.95
5.5 General Public Engagement																					**0**	-
	5.5.1	Community Open House				1													2		**3**	710.56
	5.5.2	Existing Community Forums/Meetings				2													8		**10**	2,417.47
5.6 Final Feasibility Report																					**0**	-
	5.6.1	Final Report				4					20							4	4		**32**	5,297.86
	5.6.2	Finalize 30% Design Drawings									20						48	4	12	16	**100**	13,791.98
5.7 Presentation & Closeout																					**0**	-
	5.7.1	Prepare presentation materials				0													12	16	**28**	5,409.44
	5.7.2	Present to stakeholders / council				0													2		**2**	498.17
	5.7.3	Closeout				8												12			**20**	2,978.45
																					0	-
																					0	-
		Total	**0**	**65**	**0**	**206**	**0**	**0**	**0**	**0**	**259**	**0**	**6**	**0**	**0**	**0**	**118**	**112**	**232**	**137**	**1,135**	**202,466.32**

Feasibility Study for Monroe Street SDS
PRIME CONSULTANT - Coffman Engineers, Inc.
Cost Worksheet

Class	Classification	Staff	Hours	x	Rate	=	Cost	Burdened Rates	Burdened Costs
1	Principal II		0		$ 90.63		$ -	$ 288.94	$ -
2	Principal I		0		$ 82.98		$ -	$ 264.55	$ -
3	Senior Discipline Manager		65		$ 78.39		$ 5,095.35	$ 249.92	$ 16,244.49
4	Senior Discipline Engineer		0		$ 71.44		$ -	$ 227.76	$ -
5	Discipline Manager		206		$ 66.62		$ 13,723.72	$ 212.39	$ 43,752.59
6	Senior Project Manager		0		$ 65.22		$ -	$ 207.93	$ -
7	Discipline Engineer		0		$ 63.52		$ -	$ 202.51	$ -
8	Project Manager		0		$ 55.54		$ -	$ 177.07	$ -
9	Senior Engineer		0		$ 55.96		$ -	$ 178.41	$ -
10	Engineer III		259		$ 47.45		$ 12,289.55	$ 151.28	$ 39,180.31
11	Engineer II		0		$ 41.69		$ -	$ 132.91	$ -
12	Engineer I - NE		6		$ 37.37		$ 224.22	$ 119.14	$ 714.84
13	Senior Designer		0		$ 48.78		$ -	$ 155.52	$ -
14	Designer III		0		$ 40.97		$ -	$ 130.62	$ -
15	Designer II		0		$ 34.87		$ -	$ 111.17	$ -
16	Designer I		118		$ 32.22		$ 3,801.96	$ 102.72	$ 12,121.03
17	Drafter II		0		$ 29.05		$ -	$ 92.61	$ -
18	Drafter I		0		$ 24.07		$ -	$ 76.74	$ -
19	Engineering Intern		0		$ 23.10		$ -	$ 73.65	$ -
20	Administrative Supervisor		0		$ 41.75		$ -	$ 133.10	$ -
21	Project Coordinator		112		$ 33.44		$ 3,745.28	$ 106.61	$ 11,940.33
22	Senior Landscape Architect		232		$ 78.13		$ 18,126.16	$ 249.09	$ 57,788.01
23	Landscape Architect II		137		$ 47.45		$ 6,500.65	$ 151.28	$ 20,724.72
24			0				$ -	$ -	$ -
25			0				$ -		$ -
26			0				$ -		
		Total Hours	1135						

		Total Labor Effort	**$**	**63,506.89**
Overhead & cost				
Overhead Cost @	188.81% of Direct Labor		$	119,907.36
Fee @	30.00% Direct Labor		$	19,052.07
				%
Total Labor Effort			**$**	**202,466.32**

Direct Non-Salary Costs[1,2]				**Cost**
Automobile	200 Miles	$ 0.760 $/Mi	$	152.00
Airline	2	$ 800.00 est	$	1,600.00
Per Diem	4	$ 86.00	$	344.00
Lodging	4	$ 126.00	$	504.00
		Direct Non-Salary Costs Total	**$**	**1,752.00**

1) Mileage shall be reimbursed at current IRS Rate
2) Meals/Lodging shall be reimbursed at cost (invoices required) in accordance with GSA.gov rates

	Prime Subtotal	**$ 204,218.32**	61.49%

Subconsultant	Subconsultant Expense	
Kittelson and Associate	$ 109,761.12	33.05%
Gorman Preservation	$ 18,128.00	5.46%

Total Subconsultant Expense	$ 127,889.12	38.51%
Total	$ 332,107.44	
PRIME CONSULTANT - Coffman Engineers, Inc. Total Cost:	$ 332,107.44	

Washington State Department of Transportation

Development Division
Contract Services Office
PO Box 47408
Olympia, WA 98504-7408
7345 Linderson Way SW
Tumwater, WA 98501-6504

TTY: 1-800-833-6388
www.wsdot.wa.gov

June 23, 2026

Coffman Engineers, Inc
1001 2nd Avenue, Suite 400
Seattle, WA 98101

Subject: Acceptance FYE 2025 ICR - Risk Assessment Review

Dear Nick Rey:

Based on Washington State Department of Transportation's (WSDOT) Risk Assessment review of your Indirect Cost Rate (ICR), we have accepted your proposed FYE 2025 ICR of 188.81% of direct labor (rate includes 0.04% Facilities Capital Cost of Money). This rate will be applicable for WSDOT Agreements and Local Agency Contracts in Washington only. This rate may be subject to additional review if considered necessary by WSDOT. Your ICR must be updated on an annual basis.

Costs billed to agreements/contracts will still be subject to audit of actual costs, based on the terms and conditions of the respective agreement/contract.

This was not a cognizant review. Any other entity contracting with your firm is responsible for determining the acceptability of the ICR.

If you have any questions, feel free to contact our office at **(360) 704-6397** or via email **consultantrates@wsdot.wa.gov**.

Regards,

Schatzie Harvey
Schatzie Harvey (Jun 23, 2026 15:55:30 PDT)

SCHATZIE HARVEY, CPA
Contract Services Manager

SH:th

Feasibility Study for Monroe Street SDS
Estimated Hours

SUBCONSULTANT - Kittelson and Associates

			1	2	3	4	5	6		
			$ 300.21	$ 234.96	$ 161.11	$ 164.53	$ 193.00	$ 138.52		
Work Elem.	**Sub Elem.**	**Description**	**Senior Principal**	**Associate Engineer**	**Planner**	**Senior Technician**	**Senior Technican SR**	**Transportation Analyst**	**Total Hours**	**Fee**
Task 1: Project Management									0	0
		Subconsultant Coordinate							0	0
		Invoicing	8	0					8	2401.68
		Tracking Schedule and Scope		0					0	0
		Design and Detailing Coordination with Team							0	0
									0	0
									0	0
									0	0
Task 2: Recurring Coordination Meetings									0	0
		Monthly Recurring Meeting with City	8	4					12	3341.52
		Design Recurring meetings	8	4					12	3341.52
									0	0
									0	0
									0	0
									0	0
Task 3: Phase 1									0	0
1.1 Project Setup & Management									0	0
		1.1.1 Kickoff meeting	2	2		2			6	1399.4
		1.1.2 Confirm scope, roles, communication plan	2						2	600.42
		1.1.3 Develop project management plan	4	2					6	1670.76
1.2 Pre-Project Preparation									0	0
		1.2.1 Formation of TAC	1						1	300.21
		1.2.2 Intro Meeting with TAC	2			2		4	8	1483.56
		1.2.3 Develop Public Information Package	8			30		12	50	8999.82
		1.2.4 Review of Public Information Package with TAC	2			2			4	929.48
		1.2.5 Finalize Public Information Package	2			12		6	20	3405.9
		1.2.6 Messaging Training	2	1		1		1	5	1138.43
		1.2.7 Brief City Council and Mayor							0	0
1.3 Historic Preservation Outreach									0	0
		1.3.1 Engage FHWA							0	0
		1.3.2 Engage SHPO							0	0
		1.3.3 Engage City of Spokane Historic							0	0
1.4 Existing Information Review									0	0
		1.4.1 Collect as-builts and prior reports							0	0
		1.4.2 Review codes/criteria (AASHTO, WSDOT, etc.)							0	0
		1.4.3 Identify data gaps							0	0
1.5 Existing Conditions Assessment									0	0
		1.5.1 Structural condition review		4				4	8	1493.92
		1.5.2 Operational assessment (traffic, users)							0	0
		1.5.3 Environmental and regulatory constraints							0	0
1.6 Site Investigation									0	0
		1.6.1 Site visit / field review							0	0
		1.6.2 Photo documentation							0	0
		1.6.3 Identify constraints and risks							0	0
1.7 Evaluation Criteria Development									0	0
		1.7.1 Define performance criteria							0	0
		1.7.2 Define cost/schedule considerations							0	0
		1.7.3 Confirm criteria with client								
Task 4 Phase 2									0	0
2.1 Develop Alternatives									0	0
		2.1.1 Brainstorm solution types	4	4					8	2140.68
		2.1.2 Screen infeasible options							0	0
		2.1.3 Define viable alternatives							0	0
2.2 TAC Engagement									0	0
		2.2.1 TAC Meeting	2	2		2			6	1399.4
2.3 Stakeholder Engagement									0	0
		2.3.1 Distribute Public Information Package	2					2	4	877.46
		2.3.2 Outreach and Coordination							0	0
2.4 Historic Preservation									0	0
		2.4.1 Touchbase with FHWA							0	0
		2.4.2 Touchbase with SHPO							0	0
2.5 Concept Development									0	0
		2.5.1 Concept layouts / sketches							0	0
		2.5.2 Preliminary structural concepts							0	0
		2.5.3 Identify key constraints per alternative							0	0
2.6 Technical Feasibility									0	0
		2.6.1 Structural feasibility review		8					8	1879.68
		2.6.2 Constructability considerations							0	0
		2.6.3 Operational impacts		24					24	5639.04
2.7 Cost & Schedule									0	0
		2.7.1 Opinion of probable cost							0	0
		2.7.2 Construction duration estimates							0	0
		2.7.3 Phasing consideration							0	0
Task 5 Phase 3									0	0
3.1 Evaluation Framework									0	0
		3.1.1 Develop evaluation matrix (CBA)		2					2	469.92
		3.1.2 Define weighting / importance		2					2	469.92
3.2 TAC Engagement									0	0
		3.2.1 TAC Meeting	2	2		2			6	1399.4
3.3 Alternative Comparison									0	0
		3.3.1 Evaluate performance vs criteria	6						6	1801.26
		3.3.2 Identify advantages/disadvantages	6						6	1801.26
		3.3.3 Refine alternatives							0	0
3.4 Historic Preservation									0	0
		3.4.1 Touchbase with FHWA							0	0
		3.4.2 Touchbase with SHPO							0	0
3.5 Documentation									0	0
		3.5.1 Prepare alternatives summary							0	0
		3.5.2 Develop comparison graphics							0	0
		3.5.3 Update Public Information Package	4			16		8	28	4941.48
		3.5.4 Brief Council and Mayor	2						2	600.42
Task 6 Phase 4									0	0
4.1 General Public Engagement Activities									0	0
		4.1.1 Development Presentation Boards for Open House	4			28			32	5807.68
		4.1.2 Host Community Open House	4	4				8	16	3248.84
		4.1.3 Attend existing community forum/meetings	4						4	1200.84
4.2 Stakeholder Engagement									0	0
		4.2.1 One on one/small group meetings	10					5	15	3694.7
4.3 Feedback Integration									0	0
		4.3.1 Document public input	2					8	10	1708.58
		4.3.2 Integrate feedback into alternatives							0	0
		4.3.3 Update evaluation results							0	0
Task 7 Phase 5									0	0
5.1 Preferred Alternative Selection									0	0
		5.1.1 Synthesize technical + stakeholder input							0	0
		5.1.2 Confirm alignment with project goals							0	0
		5.1.3 Final recommendation							0	0
5.2 Draft Feasibility Report									0	0
		5.2.1 Draft report preparation	4	12				8	24	5128.52
		5.2.2 Internal QA/QC							0	0
		5.2.3 Develop Draft 30% Design Plans		12			32		44	8995.52
		5.2.4 Finalize 3D Visual	2				16		18	3688.42
		5.2.5 Update Public Information Package	4			16		8	28	4941.48
		5.2.6 Communication Team strategy Meeting	2			2			4	929.48
5.3 TAC Meeting									0	0
		5.3.1 Reporting Final Recommendation	2	2				4	8	1624.42
5.4 Stakeholder Engagement									0	0
		5.4.1 Reporting Final Recommendation	2					4	6	1154.5
5.5 General Public Engagement									0	0
		5.5.1 Community Open House	4	4				8	16	3248.84
		5.5.2 Existing Community Forums/Meetings	4						4	1200.84
5.6 Final Feasibility Report									0	0
		5.6.1 Final Report							0	0
		5.6.2 Finalize 30% Design Drawings							0	0
5.7 Presentation & Closeout									0	0
		5.7.1 Prepare presentation materials	4			8	8		20	4061.08
		5.7.2 Present to stakeholders / council	4						4	1200.84
		5.7.3 Closeout							0	0
									0	0
									0	0
									0	0
		Total	**133**	**95**	**0**	**123**	**56**	**90**	**497**	**105,761.12**

Feasibility Study for Monroe Street SDS
SUBCONSULTANT - Kittelson and Associates
Cost Worksheet

Class	Classification	Staff	Hours	x	Rate	=	Cost
1	Senior Principal	Wende Wilber	133		$300.21	$	39,927.93
2	Associate Engineer	Anthony Davies	95		$234.96	$	22,321.20
3	Planner		0		$161.11	$	-
4	Senior Technician	Jennifer Marks	123		$164.53	$	20,237.19
5	Senior Technican SR	Steve Rhyne	56		$193.00	$	10,808.00
6	Transportation Analyst		90		$138.52	$	12,466.80
7	G		0		$1.00	$	-
8	H		0		$1.00	$	-
9	I		0		$1.00	$	-
10	J		0		$1.00	$	-
11	K		0		$1.00	$	-
12	L		0		$1.00	$	-
13	M		0		$1.00	$	-
14	N		0		$1.00	$	-
15	O		0		$1.00	$	-
16	P		0		$1.00	$	-
17	Q		0		$1.00	$	-
18	R		0		$1.00	$	-
19	S		0		$1.00	$	-
20	T		0		$1.00	$	-
		Total Hours	497		**Total Labor Effort**	**$**	**105,761.12**

| | | |

Washington State Department of Transportation

Development Division
Contract Services Office
PO Box 47408
Olympia, WA 98504-7408
7345 Linderson Way SW
Tumwater, WA 98501-6504

TTY: 1-800-833-6388
www.wsdot.wa.gov

September 3, 2026

Kittleson & Associates, Inc.
851 SW 6th Ave, Suite 600
Portland, OR 97204

Subject: Acceptance FYE 2025 ICR – CPA Report

Dear Janette Lennon:

We have accepted your firm's FYE 2025 Indirect Cost Rate (ICR) of 207.55% of direct labor (rate includes 0.24% Facilities Capital Cost of Money) based on the "Independent CPA Report" prepared by D.L. Purvine CPA, PLLC. This rate will be applicable for WSDOT Agreements and Local Agency Contracts in Washington only. This rate may be subject to additional review if considered necessary by WSDOT. Your ICR must be updated on an annual basis.

Costs billed to agreements/contracts will still be subject to audit of actual costs, based on the terms and conditions of the respective agreement/contract.

This was not a cognizant review. Any other entity contracting with the firm is responsible for determining the acceptability of the ICR.

If you have any questions, feel free to contact our office at **(360) 704-6397** or via email **consultantrates@wsdot.wa.gov**.

Regards,

Schatzie Harvey
Schatzie Harvey (Sep 3, 2026 07:37:01 PDT)

SCHATZIE HARVEY, CPA
Contract Services Manager

SH:th

Feasibility Study for Monroe Street SDS
Estimated Hours
Original Agreement

SUBCONSULTANT - Gorman Preservation

			1	2	3	4	5	6	7	8	9	10	11	12	13	14	15	16	17	18	19	20		
			$ 88.00	$ 1.00	$ 1.00	$ 1.00	$ 1.00	$ 1.00	$ 1.00	$ 1.00	$ 1.00	$ 1.00	$ 1.00	$ 1.00	$ 1.00	$ 1.00	$ 1.00	$ 1.00	$ 1.00	$ 1.00	$ 1.00	$ 1.00		
Work Elem.	**Sub Elem.**	**Description**	**Lead**	**B**	**C**	**D**	**E**	**F**	**G**	**H**	**I**	**J**	**K**	**L**	**M**	**N**	**O**	**P**	**Q**	**R**	**S**	**T**	**Total Hours**	**Fee**
Task 1: Project Management																							0	-
	Subconsultant Coordinate																						0	-
	Invoicing		4																				4	352.00
	Tracking Schedule and Scope																						0	-
	Design and Detailing Coordination with Team																						0	-
																							0	-
																							0	-
																							0	-
Task 2: Recurring Coordination Meetings																							0	-
	Monthly Recurring Meeting with City																						0	-
	Design Recurring meetings		12																				12	1,056.00
																							0	-
																							0	-
																							0	-
																							0	-
Task 3: Phase 1																							0	-
1.1 Project Setup & Management																							0	-
	1.1.1 Kickoff meeting		2																				2	176.00
	1.1.2 Confirm scope, roles, communication plan																						0	-
	1.1.3 Develop project management plan																						0	-
1.2 Pre-Project Preparation																							0	-
	1.2.1 Formation of TAC																						0	-
	1.2.2 Intro Meeting with TAC		2																				2	176.00
	1.2.3 Develop Public Information Package																						0	-
	1.2.4 Review of Public Information Package with TAC		2																				2	176.00
	1.2.5 Finalize Public Information Package																						0	-
	1.2.6 Messaging Training		2																				2	176.00
	1.2.7 Brief City Council and Mayor																						0	-
1.3 Historic Preservation Outreach																							0	-
	1.3.1 Engage FHWA		4																				4	352.00
	1.3.2 Engage SHPO		4																				4	352.00
	1.3.3 Engage City of Spokane Historic		8																				8	704.00
1.4 Existing Information Review																							0	-
	1.4.1 Collect as-builts and prior reports																						0	-
	1.4.2 Review codes/criteria (AASHTO, WSDOT, etc.)																						0	-
	1.4.3 Identify data gaps																						0	-
1.5 Existing Conditions Assessment																							0	-
	1.5.1 Structural condition review																						0	-
	1.5.2 Operational assessment (traffic, users)																						0	-
	1.5.3 Environmental and regulatory constraints		40																				40	3,520.00
1.6 Site Investigation																							0	-
	1.6.1 Site visit / field review																						0	-
	1.6.2 Photo documentation																						0	-
	1.6.3 Identify constraints and risks																						0	-
1.7 Evaluation Criteria Development																							0	-
	1.7.1 Define performance criteria		2																				2	176.00
	1.7.2 Define cost/schedule considerations		2																				2	176.00
	1.7.3 Confirm criteria with client																						0	-
Task 4 Phase 2																							0	-
2.1 Develop Alternatives																							0	-
	2.1.1 Brainstorm solution types		4																				4	352.00
	2.1.2 Screen infeasible options		4																				4	352.00
	2.1.3 Define viable alternatives		4																				4	352.00
2.2 TAC Engagement																							0	-
	2.2.1 TAC Meeting		2																				2	176.00
2.3 Stakeholder Engagement																							0	-
	2.3.1 Distribute Public Information Package																						0	-
	2.3.2 Outreach and Coordination																						0	-
2.4 Historic Preservation																							0	-
	2.4.1 Touchbase with FHWA		4																				4	352.00
	2.4.2 Touchbase with SHPO		4																				4	352.00
2.5 Concept Development																							0	-
	2.5.1 Concept layouts / sketches																						0	-
	2.5.2 Preliminary structural concepts																						0	-
	2.5.3 Identify key constraints per alternative		8																				8	704.00
2.6 Technical Feasibility																							0	-
	2.6.1 Structural feasibility review																						0	-
	2.6.2 Constructability considerations																						0	-
	2.6.3 Operational impacts																						0	-
2.7 Cost & Schedule																							0	-
	2.7.1 Opinion of probable cost																						0	-
	2.7.2 Construction duration estimates																						0	-
	2.7.3 Phasing consideration																						0	-
Task 5 Phase 3																							0	-
3.1 Evaluation Framework																							0	-
	3.1.1 Develop evaluation matrix (CBA)		2																				2	176.00
	3.1.2 Define weighting / importance																						0	-
3.2 TAC Engagement																							0	-
	3.2.1 TAC Meeting		1																				1	88.00
3.3 Alternative Comparison																							0	-
	3.3.1 Evaluate performance vs criteria		4																				4	352.00
	3.3.2 Identify advantages/disadvantages		4																				4	352.00
	3.3.3 Refine alternatives		4																				4	352.00
3.4 Historic Preservation																							0	-
	3.4.1 Touchbase with FHWA		2																				2	176.00
	3.4.2 Touchbase with SHPO		2																				2	176.00
3.5 Documentation																							0	-
	3.5.1 Prepare alternatives summary																						0	-
	3.5.2 Develop comparison graphics																						0	-
	3.5.3 Update Public Information Package																						0	-
	3.5.4 Brief Council and Mayor																						0	-
Task 6 Phase 4																							0	-
4.1 General Public Engagement Activities																							0	-
	4.1.1 Development Presentation Boards for Open House																						0	-
	4.1.2 Host Community Open House		4																				4	352.00
	4.1.3 Attend existing community forum/meetings																						0	-
4.2 Stakeholder Engagement																							0	-
	4.2.1 One on one/small group meetings																						0	-
4.3 Feedback Integration																							0	-
	4.3.1 Document public input																						0	-
	4.3.2 Integrate feedback into alternatives		4																				4	352.00
	4.3.3 Update evaluation results																						0	-
Task 7 Phase 5																							0	-
5.1 Preferred Alternative Selection																							0	-
	5.1.1 Synthesize technical + stakeholder input																						0	-
	5.1.2 Confirm alignment with project goals																						0	-
	5.1.3 Final recommendation																						0	-
5.2 Draft Feasibility Report																							0	-
	5.2.1 Draft report preparation																						0	-
	5.2.2 Internal QA/QC																						0	-
	5.2.3 Develop Draft 30% Design Plans																						0	-
	5.2.4 Finalize 3D Visual																						0	-
	5.2.5 Update Public Information Package																						0	-
	5.2.6 Communication Team strategy Meeting																						0	-
5.3 TAC Meeting																							0	-
	5.3.1 Reporting Final Recommendation		4																				4	352.00
5.4 Stakeholder Engagement																							0	-
	5.4.1 Reporting Final Recommendation		4																				4	352.00
5.5 General Public Engagement																							0	-
	5.5.1 Community Open House		4																				4	352.00
	5.5.2 Existing Community Forums/Meetings		5																				5	440.00
5.6 Final Feasibility Report																							0	-
	5.6.1 Final Report		40																				40	3,520.00
	5.6.2 Finalize 30% Design Drawings																						0	-
5.7 Presentation & Closeout																							0	-
	5.7.1 Prepare presentation materials		4																				4	352.00
	5.7.2 Present to stakeholders / council		4																				4	352.00
	5.7.3 Closeout																						0	-
																							0	-
																							0	-
		Total	**206**	**0**	**0**	**0**	**0**	**0**	**0**	**0**	**0**	**0**	**0**	**0**	**0**	**0**	**0**	**0**	**0**	**0**	**0**	**0**	**206**	**18,128.00**

Feasibility Study for Monroe Street SDS
SUBCONSULTANT - Gorman Preservation
Cost Worksheet

Class	Classification	Staff	Hours	x	Rate	=	Cost
1	Lead		206		$88.00	$	18,128.00
2	B		0		$1.00	$	-
3	C		0		$1.00	$	-
4	D		0		$1.00	$	-
5	E		0		$1.00	$	-
6	F		0		$1.00	$	-
7	G		0		$1.00	$	-
8	H		0		$1.00	$	-
9	I		0		$1.00	$	-
10	J		0		$1.00	$	-
11	K		0		$1.00	$	-
12	L		0		$1.00	$	-
13	M		0		$1.00	$	-
14	N		0		$1.00	$	-
15	O		0		$1.00	$	-
16	P		0		$1.00	$	-
17	Q		0		$1.00	$	-
18	R		0		$1.00	$	-
19	S		0		$1.00	$	-
20	T		0		$1.00	$	-
		Total Hours	206		**Total Labor Effort**	**$**	**18,128.00**

$	88.00	$	-	$	-	$	88.00
$	1.00	$	-	$	-	$	1.00
$	1.00	$	-	$	-	$	1.00
$	1.00	$	-	$	-	$	1.00
$	1.00	$	-	$	-	$	1.00
$	1.00	$	-	$	-	$	1.00
$	1.00	$	-	$	-	$	1.00
$	1.00	$	-	$	-	$	1.00
$	1.00	$	-	$	-	$	1.00
$	1.00	$	-	$	-	$	1.00
$	1.00	$	-	$	-	$	1.00
$	1.00	$	-	$	-	$	1.00
$	1.00	$	-	$	-	$	1.00
$	1.00	$	-	$	-	$	1.00
$	1.00	$	-	$	-	$	1.00
$	1.00	$	-	$	-	$	1.00
$	1.00	$	-	$	-	$	1.00
$	1.00	$	-	$	-	$	1.00
$	1.00	$	-	$	-	$	1.00
$	1.00	$	-	$	-	$	1.00

Total Labor Effort **$ 18,128.00**

Direct Non-Salary Costs[1,2]				**Cost**
Automobile	0	$ 0.760		$ -
	Miles	$/Mi		
			$0	$ -

1) Mileage shall be reimbursed at current IRS Rate
2) Meals/Lodging shall be reimbursed at cost (invoices required) in accordance with GSA.gov rates

Direct Non-Salary Costs Total **$ -**

Total **$ 18,128.00**

SUBCONSULTANT - Gorman Preservation Total Cost: **$ 18,128.00**

Washington State Department of Transportation

Development Division
Contract Services Office
PO Box 47408
Olympia, WA 98504-7408
7345 Linderson Way SW
Tumwater, WA 98501-6504

TTY: 1-800-833-6388
www.wsdot.wa.gov

March 31, 2026

Gorman Preservation Associates
12020 N. Country Club Drive
Spokane, WA 99218-2942

Subject: Acceptance FYE 2025 ICR – Audit Office Review Dear

Jennifer Gorman:

Transmitted herewith is the WSDOT Audit Office's memo of "Acceptance" of your firm's FYE 2025 Indirect Cost Rate (ICR) of 102.45% of direct labor. This rate will be applicable for WSDOT Agreements and Local Agency Contracts in Washington only. This rate may be subject to additional review if considered necessary by WSDOT. Your ICR must be updated on an annual basis.

Costs billed to agreements/contracts will still be subject to audit of actual costs, based on the terms and conditions of the respective agreement/contract.

This was not a cognizant review. Any other entity contracting with your firm is responsible for determining the acceptability of the ICR.

If you have any questions, feel free to contact our office at **(360) 704-6397** or via email **consultantrates@wsdot.wa.gov**.

Regards,

Schatzie Harvey
Schatzie Harvey (Mar 31, 2026 12:15:37 PDT)

SCHATZIE HARVEY, CPA
Contract Services Manager

SH:th

Client#: 1842705 COFFMENG2

ACORD™ CERTIFICATE OF LIABILITY INSURANCE

DATE (MM/DD/YYYY) 8/11/2026

THIS CERTIFICATE IS ISSUED AS A MATTER OF INFORMATION ONLY AND CONFERS NO RIGHTS UPON THE CERTIFICATE HOLDER. THIS CERTIFICATE DOES NOT AFFIRMATIVELY OR NEGATIVELY AMEND, EXTEND OR ALTER THE COVERAGE AFFORDED BY THE POLICIES BELOW. THIS CERTIFICATE OF INSURANCE DOES NOT CONSTITUTE A CONTRACT BETWEEN THE ISSUING INSURER(S), AUTHORIZED REPRESENTATIVE OR PRODUCER, AND THE CERTIFICATE HOLDER.

IMPORTANT: If the certificate holder is an ADDITIONAL INSURED, the policy(ies) must have ADDITIONAL INSURED provisions or be endorsed. If SUBROGATION IS WAIVED, subject to the terms and conditions of the policy, certain policies may require an endorsement. A statement on this certificate does not confer any rights to the certificate holder in lieu of such endorsement(s).

PRODUCER	CONTACT NAME: Marla Jennifer Branch	
USI Insurance Services NW CL 601 Union Street, Suite 1000 Seattle, WA 98101	PHONE (A/C, No, Ext): 206 441-6300	FAX (A/C, No): 610-362-8530
	E-MAIL ADDRESS: marla.branch@usi.com	

INSURER(S) AFFORDING COVERAGE	NAIC #
INSURER A : Charter Oak Fire Insurance Company	25615
INSURER B : Travelers Property Cas. Co. of America	25674
INSURER C : HDI Global Insurance Company	41343
INSURER D : Travelers Indemnity Co of America	25666
INSURER E :	
INSURER F :	

INSURED
Coffman Engineers, Inc.
1101 2nd Avenue, Suite 400
Seattle, WA 98101-2923

COVERAGES **CERTIFICATE NUMBER:** **REVISION NUMBER:**

THIS IS TO CERTIFY THAT THE POLICIES OF INSURANCE LISTED BELOW HAVE BEEN ISSUED TO THE INSURED NAMED ABOVE FOR THE POLICY PERIOD INDICATED. NOTWITHSTANDING ANY REQUIREMENT, TERM OR CONDITION OF ANY CONTRACT OR OTHER DOCUMENT WITH RESPECT TO WHICH THIS CERTIFICATE MAY BE ISSUED OR MAY PERTAIN, THE INSURANCE AFFORDED BY THE POLICIES DESCRIBED HEREIN IS SUBJECT TO ALL THE TERMS, EXCLUSIONS AND CONDITIONS OF SUCH POLICIES. LIMITS SHOWN MAY HAVE BEEN REDUCED BY PAID CLAIMS.

INSR LTR	TYPE OF INSURANCE	ADDL INSR	SUBR WVD	POLICY NUMBER	POLICY EFF (MM/DD/YYYY)	POLICY EXP (MM/DD/YYYY)	LIMITS	
A	X COMMERCIAL GENERAL LIABILITY CLAIMS-MADE X OCCUR GEN'L AGGREGATE LIMIT APPLIES PER: POLICY X PRO-JECT LOC OTHER:	X	X	P6307S864976COF25	11/30/2025	11/30/2026	EACH OCCURRENCE DAMAGE TO RENTED PREMISES (Ea occurrence) MED EXP (Any one person) PERSONAL & ADV INJURY GENERAL AGGREGATE PRODUCTS - COMP/OP AGG $	$1,000,000 $1,000,000 $15,000 $1,000,000 $2,000,000 $2,000,000 $
D	AUTOMOBILE LIABILITY X ANY AUTO OWNED AUTOS ONLY SCHEDULED AUTOS X HIRED AUTOS ONLY X NON-OWNED AUTOS ONLY	X	X	BA7S8948402543G	11/30/2025	11/30/2026	COMBINED SINGLE LIMIT (Ea accident) BODILY INJURY (Per person) BODILY INJURY (Per accident) PROPERTY DAMAGE (Per accident) $	$1,000,000 $ $ $ $
B	X UMBRELLA LIAB X OCCUR EXCESS LIAB CLAIMS-MADE DED X RETENTION $10,000	X	X	CUP7S9083872543	11/30/2025	11/30/2026	EACH OCCURRENCE AGGREGATE $	$5,000,000 $5,000,000 $
B	WORKERS COMPENSATION AND EMPLOYERS' LIABILITY ANY PROPRIETOR/PARTNER/EXECUTIVE OFFICER/MEMBER EXCLUDED? Y / N: N (Mandatory in NH) If yes, describe under DESCRIPTION OF OPERATIONS below	N / A	X	UB7S8993132543G	11/30/2025	11/30/2026	X PER STATUTE OTH-ER E.L. EACH ACCIDENT E.L. DISEASE - EA EMPLOYEE E.L. DISEASE - POLICY LIMIT	 $1,000,000 $1,000,000 $1,000,000
C	Professional Liab & Pollution Liab			FRSHPPL0001104702	11/30/2025	11/30/2026	$1,000,000 Each Claim $1,000,000 Aggregate	

DESCRIPTION OF OPERATIONS / LOCATIONS / VEHICLES (ACORD 101, Additional Remarks Schedule, may be attached if more space is required)

RE: Spokane; 262782; Monroe Street Physical Suicide Deterrent System.

The General liability and Automobile liability policies includes an automatic Additional Insured endorsement that provides Additional Insured status to City of Spokane, WA, only when there is a written contract that requires such status, and only with regard to work performed by or on behalf of the named insured.

CERTIFICATE HOLDER

City of Spokane
Attn.: Nate Sulya
808 W Spokane Falls Blvd
Spokane, WA 99201

CANCELLATION

SHOULD ANY OF THE ABOVE DESCRIBED POLICIES BE CANCELLED BEFORE THE EXPIRATION DATE THEREOF, NOTICE WILL BE DELIVERED IN ACCORDANCE WITH THE POLICY PROVISIONS.

AUTHORIZED REPRESENTATIVE

Gary D. Patterson

© 1988-2015 ACORD CORPORATION. All rights reserved.

THIS ENDORSEMENT CHANGES THE POLICY. PLEASE READ IT CAREFULLY

TOTAL GENERAL AGGREGATE LIMIT DESIGNATED PROJECT(S) – GENERAL AGGREGATE LIMIT

This endorsement modifies insurance provided under the following:

COMMERCIAL GENERAL LIABILITY COVERAGE PART

SCHEDULE

Total General Aggregate Limit: $

Designated Project(s):

Per Project / Per Location Aggregate

(If no entry appears above, information required to complete this endorsement will be shown in the Declarations as applicable to this endorsement.)

A. The Total General Aggregate Limit stated in the Schedule above is the most we will pay for the sum of all:

1. Medical Expenses under COVERAGE C (SECTION I);

2. Damages under COVERAGE A (SECTION I), except damages because of "bodily injury" or "property damage" included in the "products-completed operations hazard"; and

3. Damages under COVERAGE B (SECTION I)

regardless of the number of:

a. Insureds;

b. Claims made or "suits" brought;

c. Persons or organizations making claims or bringing "suits"; or

d. Designated "projects" listed in the SCHEDULE above.

B. For all sums which the insured becomes legally obligated to pay as damages caused by "occurrences" under COVERAGE A (SECTION I), and for all medical expenses caused by accidents under COVERAGE C (SECTION I), which can be attributed only to operations at a single designated "project" shown in the Schedule above:

1. A separate Designated Project General Aggregate Limit applies to each designated "project", and that limit is equal to the amount of the General Aggregate Limit shown in the Declarations.

2. Subject to the Total General Aggregate Limit stated in the Schedule above, the Designated Project General Aggregate Limit is the most we will pay for the sum of all damages under COVERAGE A, except damages because of "bodily injury" or "property damage" included in the "products-completed operations hazard", and for medical expenses under COVERAGE C regardless of the number of:

a. Insureds;

b. Claims made or "suits" brought; or

c. Persons or organizations making claims or bringing "suits".

Copyright, The Travelers Indemnity Company, 2004

3. Any payments made under COVERAGE A for damages or under COVERAGE C for medical expenses shall reduce both the Total General Aggregate Limit stated in the Schedule above, and the Designated Project General Aggregate Limit for that designated "project". Such payments shall not reduce the General Aggregate Limit shown in the Declarations nor shall they reduce any other Designated Project General Aggregate Limit for any other designated "project" shown in the Schedule above.

4. The limits shown in the Declarations for Each Occurrence, Damage To Premises Rented To You and Medical Expense continue to apply. However, instead of being subject to the General Aggregate Limit shown in the Declarations, such limits will be subject to both the Total General Aggregate Limit stated in the Schedule above, and the applicable Designated Project General Aggregate Limit.

C. For all sums which the insured becomes legally obligated to pay as damages caused by "occurrences" under COVERAGE A (SECTION I), and for all medical expenses caused by accidents under COVERAGE C (SECTION I), which cannot be attributed only to operations at a single designated "project" shown in the Schedule above:

1. Any payments made under COVERAGE A for damages or under COVERAGE C for medical expenses shall reduce the amount available under the Total General Aggregate Limit stated in the Schedule above and the General Aggregate Limit, or the Products-Completed Operations Aggregate Limit, whichever is applicable; and

2. Such payments shall not reduce any Designated Project General Aggregate Limit.

As respects this Provision **C.**, the limits shown in the Declarations for Each Occurrence, Damage To Premises Rented To You and Medical Expense continue to apply.

D. Part **2.** of **SECTION III – LIMITS OF INSURANCE** is deleted and replaced by the following:

2. The General Aggregate Limit is the most we will pay for the sum of:

a. Damages under Coverage B; and

b. Damages from "occurrences" under COVERAGE A (SECTION I) and for all medical expenses caused by accidents under COVERAGE C (SECTION I) which cannot be attributed only to operations at a single designated "project" shown in the **SCHEDULE** above.

E. When coverage for liability arising out of the "products-completed operations hazard" is provided, any payments for damages because of "bodily injury" or "property damage" included in the "products-completed operations hazard" will reduce the Products-Completed Operations Aggregate Limit, and not reduce the Total General Aggregate Limit stated in the Schedule above, the General Aggregate Limit, or the Designated Project General Aggregate Limit.

F. For the purposes of this endorsement the Definitions Section is amended by the addition of the following definition:

"Project" means an area away from premises owned by or rented to you at which you are performing operations pursuant to a contract or agreement. For the purposes of determining the applicable aggregate limit of insurance, each "project" that includes premises involving the same or connecting lots, or premises whose connection is interrupted only by a street, roadway, waterway or right-of-way of a railroad shall be considered a single "project".

G. The provisions of LIMITS OF INSURANCE (SECTION III) not otherwise modified by this endorsement shall continue to apply as stipulated.

Copyright, The Travelers Indemnity Company, 2004

THIS ENDORSEMENT CHANGES THE POLICY. PLEASE READ IT CAREFULLY.

XTEND ENDORSEMENT FOR ARCHITECTS, ENGINEERS AND SURVEYORS

This endorsement modifies insurance provided under the following:

COMMERCIAL GENERAL LIABILITY COVERAGE PART

GENERAL DESCRIPTION OF COVERAGE – This endorsement broadens coverage. However, coverage for any injury, damage or medical expenses described in any of the provisions of this endorsement may be excluded or limited by another endorsement to this Coverage Part, and these coverage broadening provisions do not apply to the extent that coverage is excluded or limited by such an endorsement. The following listing is a general coverage description only. Read all the provisions of this endorsement and the rest of your policy carefully to determine rights, duties, and what is and is not covered.

A. Non-Owned Watercraft – 75 Feet Long Or Less

B. Who Is An Insured – Unnamed Subsidiaries

C. Who Is An Insured – Retired Partners, Members, Directors And Employees

D. Who Is An Insured – Employees And Volunteer Workers – Bodily Injury To Co-Employees, Co-Volunteer Workers And Retired Partners, Members, Directors And Employees

E. Who Is An Insured – Newly Acquired Or Formed Limited Liability Companies

F. Blanket Additional Insured – Controlling Interest

G. Blanket Additional Insured – Mortgagees, Assignees, Successors Or Receivers

H. Blanket Additional Insured – Governmental Entities – Permits Or Authorizations Relating To Premises

I. Blanket Additional Insured – Governmental Entities – Permits Or Authorizations Relating To Operations

J. Incidental Medical Malpractice

K. Medical Payments – Increased Limit

L. Amendment Of Excess Insurance Condition – Professional Liability

M. Blanket Waiver Of Subrogation – When Required By Written Contract Or Agreement

N. Contractual Liability – Railroads

PROVISIONS

A. NON-OWNED WATERCRAFT – 75 FEET LONG OR LESS

1. The following replaces Paragraph **(2)** of Exclusion **g.**, **Aircraft, Auto Or Watercraft**, in Paragraph **2.** of **SECTION I – COVERAGES – COVERAGE A – BODILY INJURY AND PROPERTY DAMAGE LIABILITY**:

(2) A watercraft you do not own that is:

(a) 75 feet long or less; and

(b) Not being used to carry any person or property for a charge;

2. The following replaces Paragraph **2.e.** of **SECTION II – WHO IS AN INSURED**:

e. Any person or organization that, with your express or implied consent, either uses or is responsible for the use of a watercraft that you do not own that is:

(1) 75 feet long or less; and

(2) Not being used to carry any person or property for a charge;

B. WHO IS AN INSURED – UNNAMED SUBSIDIARIES

The following is added to **SECTION II – WHO IS AN INSURED**:

Any of your subsidiaries, other than a partnership or joint venture, that is not shown as a Named Insured in the Declarations is a Named Insured if:

a. You are the sole owner of, or maintain an ownership interest of more than 50% in, such subsidiary on the first day of the policy period; and

© 2017 The Travelers Indemnity Company. All rights reserved.
Includes copyrighted material of Insurance Services Office, Inc. with its permission.

b. Such subsidiary is not an insured under similar other insurance.

No such subsidiary is an insured for "bodily injury" or "property damage" that occurred, or "personal and advertising injury" caused by an offense committed:

a. Before you maintained an ownership interest of more than 50% in such subsidiary; or

b. After the date, if any, during the policy period that you no longer maintain an ownership interest of more than 50% in such subsidiary.

For purposes of Paragraph **1.** of Section **II** – Who Is An Insured, each such subsidiary will be deemed to be designated in the Declarations as:

a. A limited liability company;

b. An organization other than a partnership, joint venture or limited liability company; or

c. A trust;

as indicated in its name or the documents that govern its structure.

C. WHO IS AN INSURED – RETIRED PARTNERS, MEMBERS, DIRECTORS AND EMPLOYEES

The following is added to Paragraph **2.** of **SECTION II – WHO IS AN INSURED**:

Any person who is your retired partner, member, director or "employee" that is performing services for you under your direct supervision, but only for acts within the scope of their employment by you or while performing duties related to the conduct of your business. However, no such retired partner, member, director or "employee" is an insured for:

(1) "Bodily injury":

(a) To you, to your current partners or members (if you are a partnership or joint venture), to your current members (if you are a limited liability company) or to your current directors;

(b) To the spouse, child, parent, brother or sister of that current partner, member or director as a consequence of Paragraph **(1)(a)** above;

(c) For which there is any obligation to share damages with or repay someone else who must pay damages because of the injury described in Paragraph **(1)(a)** or **(b)** above; or

(d) Arising out of his or her providing or failing to provide professional health care services.

Unless you are in the business or occupation of providing professional health care services, Paragraphs **(1)(a)**, **(b)**, **(c)** and **(d)** above do not apply to "bodily injury" arising out of providing or failing to provide first aid or "Good Samaritan services" by any of your retired partners, members, directors or "employees", other than a doctor. Any such retired partners, members, directors or "employees" providing or failing to provide first aid or "Good Samaritan services" during their work hours for you will be deemed to be acting within the scope of their employment by you or performing duties related to the conduct of your business.

(2) "Personal injury":

(a) To you, to your current or retired partners or members (if you are a partnership or joint venture), to your current or retired members (if you are a limited liability company), to your other current or retired directors or "employees" while in the course of his or her employment or performing duties related to the conduct of your business, or to your other "volunteer workers" while performing duties related to the conduct of your business;

(b) To the spouse, child, parent, brother or sister of that current or retired partner, member, director, "employee" or "volunteer worker" as a consequence of Paragraph **(2)(a)** above;

(c) For which there is any obligation to share damages with or repay someone else who must pay damages because of the injury described in Paragraph **(2)(a)** or **(b)** above; or

(d) Arising out of his or her providing or failing to provide professional health care services.

(3) "Property damage" to property:

(a) Owned, occupied or used by; or

(b) Rented to, in the care, custody or control of, or over which physical control is being exercised for any purpose by;

you, any of your retired partners, members or directors, your current or retired "employees" or "volunteer workers", any current partner or member (if you are a partnership or joint venture), or any current member (if you are a limited liability company) or current director.

© 2017 The Travelers Indemnity Company. All rights reserved.
Includes copyrighted material of Insurance Services Office, Inc. with its permission.

D. WHO IS AN INSURED – EMPLOYEES AND VOLUNTEER WORKERS – BODILY INJURY TO CO-EMPLOYEES, CO-VOLUNTEER WORKERS AND RETIRED PARTNERS, MEMBERS, DIRECTORS AND EMPLOYEES

The following is added to Paragraph **2.a.(1)** of **SECTION II – WHO IS AN INSURED**:

Paragraphs **(1)(a)**, **(b)** and **(c)** above do not apply to "bodily injury" to a current or retired co-"employee" while in the course of the co-"employee's" employment by you or performing duties related to the conduct of your business, or to "bodily injury" to your other "volunteer workers" or retired partners, members or directors while performing duties related to the conduct of your business.

E. WHO IS AN INSURED – NEWLY ACQUIRED OR FORMED LIMITED LIABILITY COMPANIES

The following replaces Paragraph **3.** of **SECTION II – WHO IS AN INSURED**:

3. Any organization you newly acquire or form, other than a partnership or joint venture, and of which you are the sole owner or in which you maintain an ownership interest of more than 50%, will qualify as a Named Insured if there is no other similar insurance available to that organization. However:

a. Coverage under this provision is afforded only:

(1) Until the 180th day after you acquire or form the organization or the end of the policy period, whichever is earlier, if you do not report such organization in writing to us within 180 days after you acquire or form it; or

(2) Until the end of the policy period, when that date is later than 180 days after you acquire or form such organization, if you report such organization in writing to us within 180 days after you acquire or form it;

b. Coverage **A** does not apply to "bodily injury" or "property damage" that occurred before you acquired or formed the organization; and

c. Coverage **B** does not apply to "personal and advertising injury" arising out of an offense committed before you acquired or formed the organization.

For the purposes of Paragraph **1.** of Section **II** – Who Is An Insured, each such organization will be deemed to be designated in the Declarations as:

a. A limited liability company;

b. An organization other than a partnership, joint venture or limited liability company; or

c. A trust;

as indicated in its name or the documents that govern its structure.

F. BLANKET ADDITIONAL INSURED – CONTROLLING INTEREST

1. The following is added to **SECTION II – WHO IS AN INSURED**:

Any person or organization that has financial control of you is an insured with respect to liability for "bodily injury", "property damage" or "personal and advertising injury" that arises out of:

a. Such financial control; or

b. Such person's or organization's ownership, maintenance or use of premises leased to or occupied by you.

The insurance provided to such person or organization does not apply to structural alterations, new construction or demolition operations performed by or on behalf of such person or organization.

2. The following is added to Paragraph **4.** of **SECTION II – WHO IS AN INSURED**:

This paragraph does not apply to any premises owner, manager or lessor that has financial control of you.

G. BLANKET ADDITIONAL INSURED – MORTGAGEES, ASSIGNEES, SUCCESSORS OR RECEIVERS

The following is added to **SECTION II – WHO IS AN INSURED**:

Any person or organization that is a mortgagee, assignee, successor or receiver and that you have agreed in a written contract or agreement to include as an additional insured on this Coverage Part is an insured, but only with respect to its liability as mortgagee, assignee, successor or receiver for "bodily injury", "property damage" or "personal and advertising injury" that:

a. Is "bodily injury" or "property damage" that occurs, or is "personal and advertising injury" caused by an offense that is committed,

© 2017 The Travelers Indemnity Company. All rights reserved.
Includes copyrighted material of Insurance Services Office, Inc. with its permission.

subsequent to the signing of that contract or agreement; and

b. Arises out of the ownership, maintenance or use of the premises for which that mortgagee, assignee, successor or receiver is required under that contract or agreement to be included as an additional insured on this Coverage Part.

The insurance provided to such mortgagee, assignee, successor or receiver is subject to the following provisions:

a. The limits of insurance provided to such mortgagee, assignee, successor or receiver will be the minimum limits that you agreed to provide in the written contract or agreement, or the limits shown in the Declarations, whichever are less.

b. The insurance provided to such person or organization does not apply to:

(1) Any "bodily injury" or "property damage" that occurs, or any "personal and advertising injury" caused by an offense that is committed, after such contract or agreement is no longer in effect; or

(2) Any "bodily injury", "property damage" or "personal and advertising injury" arising out of any structural alterations, new construction or demolition operations performed by or on behalf of such mortgagee, assignee, successor or receiver.

H. BLANKET ADDITIONAL INSURED – GOVERNMENTAL ENTITIES – PERMITS OR AUTHORIZATIONS RELATING TO PREMISES

The following is added to **SECTION II – WHO IS AN INSURED**:

Any governmental entity that has issued a permit or authorization with respect to premises owned or occupied by, or rented or loaned to, you and that you are required by any ordinance, law, building code or written contract or agreement to include as an additional insured on this Coverage Part is an insured, but only with respect to liability for "bodily injury", "property damage" or "personal and advertising injury" arising out of the existence, ownership, use, maintenance, repair, construction, erection or removal of any of the following for which that governmental entity has issued such permit or authorization: advertising signs, awnings, canopies, cellar entrances, coal holes, driveways, manholes, marquees, hoist away openings, sidewalk vaults, elevators, street banners or decorations.

I. BLANKET ADDITIONAL INSURED – GOVERNMENTAL ENTITIES – PERMITS OR AUTHORIZATIONS RELATING TO OPERATIONS

The following is added to **SECTION II – WHO IS AN INSURED**:

Any governmental entity that has issued a permit or authorization with respect to operations performed by you or on your behalf and that you are required by any ordinance, law, building code or written contract or agreement to include as an additional insured on this Coverage Part is an insured, but only with respect to liability for "bodily injury", "property damage" or "personal and advertising injury" arising out of such operations.

The insurance provided to such governmental entity does not apply to:

a. Any "bodily injury", "property damage" or "personal and advertising injury" arising out of operations performed for the governmental entity; or

b. Any "bodily injury" or "property damage" included in the "products-completed operations hazard".

J. INCIDENTAL MEDICAL MALPRACTICE

1. The following replaces Paragraph **b.** of the definition of "occurrence" in the **DEFINITIONS** Section:

b. An act or omission committed in providing or failing to provide "incidental medical services", first aid or "Good Samaritan services" to a person, unless you are in the business or occupation of providing professional health care services.

2. The following replaces the last paragraph of Paragraph **2.a.(1)** of **SECTION II – WHO IS AN INSURED**:

Unless you are in the business or occupation of providing professional health care services, Paragraphs **(1)(a)**, **(b)**, **(c)** and **(d)** above do not apply to "bodily injury" arising out of providing or failing to provide:

(a) "Incidental medical services" by any of your "employees" who is a nurse, nurse assistant, emergency medical technician, paramedic, athletic trainer, audiologist, dietician, nutritionist,

© 2017 The Travelers Indemnity Company. All rights reserved.
Includes copyrighted material of Insurance Services Office, Inc. with its permission.

occupational therapist or occupational therapy assistant, physical therapist or speech-language pathologist; or

(b) First aid or "Good Samaritan services" by any of your "employees" or "volunteer workers", other than an employed or volunteer doctor. Any such "employees" or "volunteer workers" providing or failing to provide first aid or "Good Samaritan services" during their work hours for you will be deemed to be acting within the scope of their employment by you or performing duties related to the conduct of your business.

3. The following replaces the last sentence of Paragraph **5.** of **SECTION III – LIMITS OF INSURANCE**:

For the purposes of determining the applicable Each Occurrence Limit, all related acts or omissions committed in providing or failing to provide "incidental medical services", first aid or "Good Samaritan services" to any one person will be deemed to be one "occurrence".

4. The following exclusion is added to Paragraph **2.**, **Exclusions**, of **SECTION I – COVERAGES – COVERAGE A – BODILY INJURY AND PROPERTY DAMAGE LIABILITY**:

Sale Of Pharmaceuticals

"Bodily injury" or "property damage" arising out of the violation of a penal statute or ordinance relating to the sale of pharmaceuticals committed by, or with the knowledge or consent of the insured.

5. The following is added to the **DEFINITIONS** Section:

"Incidental medical services" means:

a. Medical, surgical, dental, laboratory, x-ray or nursing service or treatment, advice or instruction, or the related furnishing of food or beverages; or

b. The furnishing or dispensing of drugs or medical, dental, or surgical supplies or appliances.

6. The following is added to Paragraph **4.b.**, **Excess Insurance**, of **SECTION IV – COMMERCIAL GENERAL LIABILITY CONDITIONS**:

This insurance is excess over any valid and collectible other insurance, whether primary, excess, contingent or on any other basis, that is available to any of your "employees" for "bodily injury" that arises out of providing or failing to provide "incidental medical services" to any person to the extent not subject to Paragraph **2.a.(1)** of Section **II** – Who Is An Insured.

K. MEDICAL PAYMENTS – INCREASED LIMIT

The following replaces Paragraph **7.** of **SECTION III – LIMITS OF INSURANCE**:

7. Subject to Paragraph **5.** above, the Medical Expense Limit is the most we will pay under Coverage **C** for all medical expenses because of "bodily injury" sustained by any one person, and will be the higher of:

a. $10,000; or

b. The amount shown in the Declarations of this Coverage Part for Medical Expense Limit.

L. AMENDMENT OF EXCESS INSURANCE CONDITION – PROFESSIONAL LIABILITY

The following is added to Paragraph **4.b.**, **Excess Insurance**, of **SECTION IV – COMMERCIAL GENERAL LIABILITY CONDITIONS**:

This insurance is excess over any of the other insurance, whether primary, excess, contingent or on any other basis, that is Professional Liability or similar coverage, to the extent the loss is not subject to the professional services exclusion of Coverage **A** or Coverage **B**.

M. BLANKET WAIVER OF SUBROGATION – WHEN REQUIRED BY WRITTEN CONTRACT OR AGREEMENT

The following is added to Paragraph **8.**, **Transfer Of Rights Of Recovery Against Others To Us**, of **SECTION IV – COMMERCIAL GENERAL LIABILITY CONDITIONS**:

If the insured has agreed in a written contract or agreement to waive that insured's right of recovery against any person or organization, we waive our right of recovery against such person or organization, but only for payments we make because of:

a. "Bodily injury" or "property damage" that occurs; or

b. "Personal and advertising injury" caused by an offense that is committed;

subsequent to the signing of that contract or agreement.

© 2017 The Travelers Indemnity Company. All rights reserved.
Includes copyrighted material of Insurance Services Office, Inc. with its permission.

N. CONTRACTUAL LIABILITY – RAILROADS

1. The following replaces Paragraph **c.** of the definition of "insured contract" in the **DEFINITIONS** Section:

c. Any easement or license agreement;

2. Paragraph **f.(1)** of the definition of "insured contract" in the **DEFINITIONS** Section is deleted.

© 2017 The Travelers Indemnity Company. All rights reserved.
Includes copyrighted material of Insurance Services Office, Inc. with its permission.

THIS ENDORSEMENT CHANGES THE POLICY. PLEASE READ IT CAREFULLY.

NOTICE OF CANCELLATION OR NONRENEWAL PROVIDED BY US

This endorsement modifies insurance provided under the following:

ALL COVERAGE PARTS INCLUDED IN THIS POLICY

SCHEDULE

CANCELLATION:	**Number of Days Notice:** 30
WHEN WE DO NOT RENEW (Nonrenewal):	**Number of Days Notice:** 30

PROVISIONS

A. If we cancel this policy for any legally permitted reason other than nonpayment of premium, and a number of days is shown for Cancellation in the Schedule above, we will mail notice of cancellation at least the number of days shown for Cancellation in such Schedule before the effective date of cancellation.

B. If we do not renew this policy for any legally permitted reason other than nonpayment of premium, and a number of days is shown for When We Do Not Renew (Nonrenewal) in the Schedule above, we will mail notice of nonrenewal at least the number of days shown for When We Do Not Renew (Nonrenewal) in such Schedule before the effective date of nonrenewal.

©2019 The Travelers Indemnity Company. All rights reserved.

COMMERCIAL GENERAL LIABILITY COVERAGE FORM

Various provisions in this policy restrict coverage. Read the entire policy carefully to determine rights, duties and what is and is not covered.

Throughout this policy the words "you" and "your" refer to the Named Insured shown in the Declarations, and any other person or organization qualifying as a Named Insured under this policy. The words "we", "us" and "our" refer to the company providing this insurance.

The word "insured" means any person or organization qualifying as such under Section **II** – Who Is An Insured.

Other words and phrases that appear in quotation marks have special meaning. Refer to Section **V** – Definitions.

SECTION I – COVERAGES

COVERAGE A – BODILY INJURY AND PROPERTY DAMAGE LIABILITY

1. Insuring Agreement

a. We will pay those sums that the insured becomes legally obligated to pay as damages because of "bodily injury" or "property damage" to which this insurance applies. We will have the right and duty to defend the insured against any "suit" seeking those damages. However, we will have no duty to defend the insured against any "suit" seeking damages for "bodily injury" or "property damage" to which this insurance does not apply. We may, at our discretion, investigate any "occurrence" and settle any claim or "suit" that may result. But:

(1) The amount we will pay for damages is limited as described in Section **III** – Limits Of Insurance; and

(2) Our right and duty to defend end when we have used up the applicable limit of insurance in the payment of judgments or settlements under Coverages **A** or **B** or medical expenses under Coverage **C**.

No other obligation or liability to pay sums or perform acts or services is covered unless explicitly provided for under Supplementary Payments.

b. This insurance applies to "bodily injury" and "property damage" only if:

(1) The "bodily injury" or "property damage" is caused by an "occurrence" that takes place in the "coverage territory";

(2) The "bodily injury" or "property damage" occurs during the policy period; and

(3) Prior to the policy period, no insured listed under Paragraph **1.** of Section **II** – Who Is An Insured and no "employee" authorized by you to give or receive notice of an "occurrence" or claim knew that the "bodily injury" or "property damage" had occurred, in whole or in part. If such a listed insured or authorized "employee" knew, prior to the policy period, that the "bodily injury" or "property damage" occurred, then any continuation, change or resumption of such "bodily injury" or "property damage" during or after the policy period will be deemed to have been known prior to the policy period.

c. "Bodily injury" or "property damage" which occurs during the policy period and was not, prior to the policy period, known to have occurred by any insured listed under Paragraph **1.** of Section **II** – Who Is An Insured or any "employee" authorized by you to give or receive notice of an "occurrence" or claim, includes any continuation, change or resumption of that "bodily injury" or "property damage" after the end of the policy period.

d. "Bodily injury" or "property damage" will be deemed to have been known to have occurred at the earliest time when any insured listed under Paragraph **1.** of Section **II** – Who Is An Insured or any "employee" authorized by you to give or receive notice of an "occurrence" or claim:

(1) Reports all, or any part, of the "bodily injury" or "property damage" to us or any other insurer;

(2) Receives a written or verbal demand or claim for damages because of the "bodily injury" or "property damage"; or

(3) Becomes aware by any other means that "bodily injury" or "property damage" has occurred or has begun to occur.

© 2017 The Travelers Indemnity Company. All rights reserved.
Includes copyrighted material of Insurance Services Office, Inc. with its permission.

e. Damages because of "bodily injury" include damages claimed by any person or organization for care, loss of services or death resulting at any time from the "bodily injury".

2. Exclusions

This insurance does not apply to:

a. Expected Or Intended Injury

"Bodily injury" or "property damage" expected or intended from the standpoint of the insured. This exclusion does not apply to "bodily injury" or "property damage" resulting from the use of reasonable force to protect persons or property.

b. Contractual Liability

"Bodily injury" or "property damage" for which the insured is obligated to pay damages by reason of the assumption of liability in a contract or agreement. This exclusion does not apply to liability for damages:

(1) That the insured would have in the absence of the contract or agreement; or

(2) Assumed in a contract or agreement that is an "insured contract", provided that the "bodily injury" or "property damage" occurs subsequent to the execution of the contract or agreement. Solely for the purposes of liability assumed in an "insured contract", reasonable attorneys' fees and necessary litigation expenses incurred by or for a party other than an insured will be deemed to be damages because of "bodily injury" or "property damage", provided that:

(a) Liability to such party for, or for the cost of, that party's defense has also been assumed in the same "insured contract"; and

(b) Such attorneys' fees and litigation expenses are for defense of that party against a civil or alternative dispute resolution proceeding in which damages to which this insurance applies are alleged.

c. Liquor Liability

"Bodily injury" or "property damage" for which any insured may be held liable by reason of:

(1) Causing or contributing to the intoxication of any person;

(2) The furnishing of alcoholic beverages to a person under the legal drinking age or under the influence of alcohol; or

(3) Any statute, ordinance or regulation relating to the sale, gift, distribution or use of alcoholic beverages.

This exclusion applies only if you are in the business of manufacturing, distributing, selling, serving or furnishing alcoholic beverages. For the purposes of this exclusion, permitting a person to bring alcoholic beverages on your premises, for consumption on your premises, whether or not a fee is charged or a license is required for such activity, is not by itself considered the business of selling, serving or furnishing alcoholic beverages.

d. Workers' Compensation And Similar Laws

Any obligation of the insured under a workers' compensation, disability benefits or unemployment compensation law or any similar law.

e. Employer's Liability

"Bodily injury" to:

(1) An "employee" of the insured arising out of and in the course of:

(a) Employment by the insured; or

(b) Performing duties related to the conduct of the insured's business; or

(2) The spouse, child, parent, brother or sister of that "employee" as a consequence of Paragraph **(1)** above.

This exclusion applies whether the insured may be liable as an employer or in any other capacity and to any obligation to share damages with or repay someone else who must pay damages because of the injury.

This exclusion does not apply to liability assumed by the insured under an "insured contract".

f. Pollution

(1) "Bodily injury" or "property damage" arising out of the actual, alleged or threatened discharge, dispersal, seepage, migration, release or escape of "pollutants":

(a) At or from any premises, site or location which is or was at any time owned or occupied by, or rented or loaned to, any insured. However, this subparagraph does not apply to:

(i) "Bodily injury" if sustained within a building and caused by smoke, fumes, vapor or soot produced by or originating from equipment that

© 2017 The Travelers Indemnity Company. All rights reserved.
Includes copyrighted material of Insurance Services Office, Inc. with its permission.

is used to heat, cool or dehumidify the building, or produced by or originating from equipment that is used to heat water for personal use by the building's occupants or their guests;

(ii) "Bodily injury" or "property damage" for which you may be held liable, if you are a contractor and the owner or lessee of such premises, site or location has been added to your policy as an additional insured with respect to your ongoing operations performed for that additional insured at that premises, site or location and such premises, site or location is not and never was owned or occupied by, or rented or loaned to, any insured, other than that additional insured; or

(iii) "Bodily injury" or "property damage" arising out of heat, smoke or fumes from a "hostile fire";

(b) At or from any premises, site or location which is or was at any time used by or for any insured or others for the handling, storage, disposal, processing or treatment of waste;

(c) If such "pollutants" are or were at any time transported, handled, stored, treated, disposed of, or processed as waste by or for:

(i) Any insured; or

(ii) Any person or organization for whom you may be legally responsible;

(d) At or from any premises, site or location on which any insured or any contractors or subcontractors working directly or indirectly on any insured's behalf are performing operations if the "pollutants" are brought on or to the premises, site or location in connection with such operations by such insured, contractor or subcontractor. However, this subparagraph does not apply to:

(i) "Bodily injury" or "property damage" arising out of the escape of fuels, lubricants or other operating fluids which are needed to perform the normal electrical, hydraulic or mechanical functions necessary for the operation of "mobile equipment" or its parts, if such fuels, lubricants or other operating fluids escape from a vehicle part designed to hold, store or receive them. This exception does not apply if the "bodily injury" or "property damage" arises out of the intentional discharge, dispersal or release of the fuels, lubricants or other operating fluids, or if such fuels, lubricants or other operating fluids are brought on or to the premises, site or location with the intent that they be discharged, dispersed or released as part of the operations being performed by such insured, contractor or subcontractor;

(ii) "Bodily injury" or "property damage" sustained within a building and caused by the release of gases, fumes or vapors from materials brought into that building in connection with operations being performed by you or on your behalf by a contractor or subcontractor; or

(iii) "Bodily injury" or "property damage" arising out of heat, smoke or fumes from a "hostile fire"; or

(e) At or from any premises, site or location on which any insured or any contractors or subcontractors working directly or indirectly on any insured's behalf are or were at any time performing operations to test for, monitor, clean up, remove, contain, treat, detoxify or neutralize, or in any way respond to, or assess the effects of, "pollutants".

(2) Any loss, cost or expense arising out of any:

(a) Request, demand, order or statutory or regulatory requirement that any insured or others test for, monitor, clean up, remove, contain, treat, detoxify or neutralize, or in any way respond to, or assess the effects of, "pollutants"; or

© 2017 The Travelers Indemnity Company. All rights reserved.
Includes copyrighted material of Insurance Services Office, Inc. with its permission.

(b) Claim or suit by or on behalf of any governmental authority or any other person or organization because of testing for, monitoring, cleaning up, removing, containing, treating, detoxifying or neutralizing, or in any way responding to, or assessing the effects of, "pollutants".

g. Aircraft, Auto Or Watercraft

"Bodily injury" or "property damage" arising out of the ownership, maintenance, use or entrustment to others of any aircraft, "auto" or watercraft owned or operated by or rented or loaned to any insured. Use includes operation and "loading or unloading".

This exclusion applies even if the claims against any insured allege negligence or other wrongdoing in the supervision, hiring, employment, training or monitoring of others by that insured, if the "occurrence" which caused the "bodily injury" or "property damage" involved the ownership, maintenance, use or entrustment to others of any aircraft, "auto" or watercraft that is owned or operated by or rented or loaned to any insured.

This exclusion does not apply to:

(1) A watercraft while ashore on premises you own or rent;

(2) A watercraft you do not own that is:

(a) 50 feet long or less; and

(b) Not being used to carry any person or property for a charge;

(3) Parking an "auto" on, or on the ways next to, premises you own or rent, provided the "auto" is not owned by or rented or loaned to you or the insured;

(4) Liability assumed under any "insured contract" for the ownership, maintenance or use of aircraft or watercraft;

(5) "Bodily injury" or "property damage" arising out of:

(a) The operation of machinery or equipment that is attached to, or part of, a land vehicle that would qualify as "mobile equipment" under the definition of "mobile equipment" if such land vehicle were not subject to a compulsory or financial responsibility law, or other motor vehicle insurance law, where it is licensed or principally garaged; or

(b) The operation of any of the machinery or equipment listed in Paragraph **f.(2)** or **f.(3)** of the definition of "mobile equipment"; or

(6) An aircraft that is:

(a) Chartered with a pilot to any insured;

(b) Not owned by any insured; and

(c) Not being used to carry any person or property for a charge.

h. Mobile Equipment

"Bodily injury" or "property damage" arising out of:

(1) The transportation of "mobile equipment" by an "auto" owned or operated by or rented or loaned to any insured; or

(2) The use of "mobile equipment" in, or while in practice for, or while being prepared for, any prearranged racing, speed, demolition, or stunting activity.

i. War

"Bodily injury" or "property damage" arising out of:

(1) War, including undeclared or civil war;

(2) Warlike action by a military force, including action in hindering or defending against an actual or expected attack, by any government, sovereign or other authority using military personnel or other agents; or

(3) Insurrection, rebellion, revolution, usurped power, or action taken by governmental authority in hindering or defending against any of these.

j. Damage To Property

"Property damage" to:

(1) Property you own, rent, or occupy, including any costs or expenses incurred by you, or any other person, organization or entity, for repair, replacement, enhancement, restoration or maintenance of such property for any reason, including prevention of injury to a person or damage to another's property;

(2) Premises you sell, give away or abandon, if the "property damage" arises out of any part of those premises;

(3) Property loaned to you;

(4) Personal property in the care, custody or control of the insured;

© 2017 The Travelers Indemnity Company. All rights reserved.
Includes copyrighted material of Insurance Services Office, Inc. with its permission.

(5) That particular part of real property on which you or any contractors or subcontractors working directly or indirectly on your behalf are performing operations, if the "property damage" arises out of those operations; or

(6) That particular part of any property that must be restored, repaired or replaced because "your work" was incorrectly performed on it.

Paragraphs **(1)**, **(3)** and **(4)** of this exclusion do not apply to "premises damage". A separate limit of insurance applies to "premises damage" as described in Paragraph **6.** of Section **III** – Limits Of Insurance.

Paragraph **(2)** of this exclusion does not apply if the premises are "your work" and were never occupied, rented or held for rental by you.

Paragraphs **(3)**, **(4)**, **(5)** and **(6)** of this exclusion do not apply to liability assumed under a sidetrack agreement.

Paragraph **(6)** of this exclusion does not apply to "property damage" included in the "products-completed operations hazard".

k. Damage To Your Product

"Property damage" to "your product" arising out of it or any part of it.

l. Damage To Your Work

"Property damage" to "your work" arising out of it or any part of it and included in the "products-completed operations hazard".

This exclusion does not apply if the damaged work or the work out of which the damage arises was performed on your behalf by a subcontractor.

m. Damage To Impaired Property Or Property Not Physically Injured

"Property damage" to "impaired property" or property that has not been physically injured, arising out of:

(1) A defect, deficiency, inadequacy or dangerous condition in "your product" or "your work"; or

(2) A delay or failure by you or anyone acting on your behalf to perform a contract or agreement in accordance with its terms.

This exclusion does not apply to the loss of use of other property arising out of sudden and accidental physical injury to "your product" or "your work" after it has been put to its intended use.

n. Recall Of Products, Work Or Impaired Property

Damages claimed for any loss, cost or expense incurred by you or others for the loss of use, withdrawal, recall, inspection, repair, replacement, adjustment, removal or disposal of:

(1) "Your product";

(2) "Your work"; or

(3) "Impaired property";

if such product, work, or property is withdrawn or recalled from the market or from use by any person or organization because of a known or suspected defect, deficiency, inadequacy or dangerous condition in it.

o. Personal And Advertising Injury

"Bodily injury" arising out of "personal and advertising injury".

p. Electronic Data

Damages arising out of the loss of, loss of use of, damage to, corruption of, inability to access, or inability to manipulate "electronic data".

However, this exclusion does not apply to liability for damages because of "bodily injury".

q. Unsolicited Communication

"Bodily injury" or "property damage" arising out of any actual or alleged violation of any law that restricts or prohibits the sending, transmitting or distributing of "unsolicited communication".

r. Access Or Disclosure Of Confidential Or Personal Information

"Bodily injury" or "property damage" arising out of any access to or disclosure of any person's or organization's confidential or personal information.

s. Asbestos

(1) "Bodily injury" or "property damage" arising out of the actual or alleged presence or actual, alleged or threatened dispersal of asbestos, asbestos fibers or products containing asbestos, provided that the "bodily injury" or "property damage" is caused or contributed to by the hazardous properties of asbestos.

© 2017 The Travelers Indemnity Company. All rights reserved.
Includes copyrighted material of Insurance Services Office, Inc. with its permission.

(2) "Bodily injury" or "property damage" arising out of the actual or alleged presence or actual, alleged or threatened dispersal of any solid, liquid, gaseous or thermal irritant or contaminant, including smoke, vapors, soot, fumes, acids, alkalis, chemicals and waste, and that are part of any claim or "suit" which also alleges any "bodily injury" or "property damage" described in Paragraph **(1)** above.

(3) Any loss, cost or expense arising out of any:

(a) Request, demand, order or statutory or regulatory requirement that any insured or others test for, monitor, clean up, remove, contain, treat, detoxify or neutralize, or in any way respond to, or assess the effects of, asbestos, asbestos fibers or products containing asbestos; or

(b) Claim or suit by or on behalf of any governmental authority or any other person or organization because of testing for, monitoring, cleaning up, removing, containing, treating, detoxifying or neutralizing, or in any way responding to, or assessing the effects of, asbestos, asbestos fibers or products containing asbestos.

t. Employment-Related Practices

"Bodily injury" to:

(1) A person arising out of any:

(a) Refusal to employ that person;

(b) Termination of that person's employment; or

(c) Employment-related practice, policy, act or omission, such as coercion, demotion, evaluation, reassignment, discipline, failure to promote or advance, harassment, humiliation, discrimination, libel, slander, violation of the person's right of privacy, malicious prosecution or false arrest, detention or imprisonment applied to or directed at that person, regardless of whether such practice, policy, act or omission occurs, is applied or is committed before, during or after the time of that person's employment; or

(2) The spouse, child, parent, brother or sister of that person as a consequence of "bodily injury" to that person at whom any of the employment-related practices described in Paragraph **(a)**, **(b)**, or **(c)** above is directed.

This exclusion applies whether the insured may be liable as an employer or in any other capacity and to any obligation to share damages with or repay someone else who must pay damages because of the "bodily injury".

Exclusions **c.** through **n.** do not apply to "premises damage". A separate limit of insurance applies to "premises damage" as described in Paragraph **6.** of Section **III** – Limits Of Insurance.

COVERAGE B – PERSONAL AND ADVERTISING INJURY LIABILITY

1. Insuring Agreement

a. We will pay those sums that the insured becomes legally obligated to pay as damages because of "personal and advertising injury" to which this insurance applies. We will have the right and duty to defend the insured against any "suit" seeking those damages. However, we will have no duty to defend the insured against any "suit" seeking damages for "personal and advertising injury" to which this insurance does not apply. We may, at our discretion, investigate any offense and settle any claim or "suit" that may result. But:

(1) The amount we will pay for damages is limited as described in Section **III** – Limits Of Insurance; and

(2) Our right and duty to defend end when we have used up the applicable limit of insurance in the payment of judgments or settlements under Coverages **A** or **B** or medical expenses under Coverage **C**.

No other obligation or liability to pay sums or perform acts or services is covered unless explicitly provided for under Supplementary Payments.

b. This insurance applies to "personal and advertising injury" caused by an offense arising out of your business but only if the offense was committed in the "coverage territory" during the policy period.

2. Exclusions

This insurance does not apply to:

a. Knowing Violation Of Rights Of Another

"Personal and advertising injury" caused by or at the direction of the insured with the knowledge that the act would violate the rights of another and would inflict "personal and advertising injury".

© 2017 The Travelers Indemnity Company. All rights reserved.
Includes copyrighted material of Insurance Services Office, Inc. with its permission.

This exclusion does not apply to "personal injury" caused by malicious prosecution.

b. Material Published With Knowledge Of Falsity

"Personal and advertising injury" arising out of oral or written publication, including publication by electronic means, of material, if done by or at the direction of the insured with knowledge of its falsity.

c. Material Published Or Used Prior To Policy Period

(1) "Personal and advertising injury" arising out of oral or written publication, including publication by electronic means, of material whose first publication took place before the beginning of the policy period; or

(2) "Advertising injury" arising out of infringement of copyright, "title" or "slogan" in your "advertisement" whose first infringement in your "advertisement" was committed before the beginning of the policy period.

d. Criminal Acts

"Personal and advertising injury" arising out of a criminal act committed by or at the direction of the insured.

e. Contractual Liability

"Personal and advertising injury" for which the insured has assumed liability in a contract or agreement. This exclusion does not apply to liability for damages:

(1) That the insured would have in the absence of the contract or agreement; or

(2) Because of "personal injury" assumed by you in a contract or agreement that is an "insured contract", provided that the "personal injury" is caused by an offense committed subsequent to the execution of the contract or agreement. Solely for the purposes of liability assumed by you in an "insured contract", reasonable attorneys' fees and necessary litigation expenses incurred by or for a party other than an insured will be deemed to be damages because of "personal injury", provided that:

(a) Liability to such party for, or for the cost of, that party's defense has also been assumed by you in the same "insured contract"; and

(b) Such attorneys' fees and litigation expenses are for defense of that party against a civil or alternative dispute resolution proceeding in which damages to which this insurance applies are alleged.

f. Breach Of Contract

"Advertising injury" arising out of a breach of contract.

g. Quality Or Performance Of Goods – Failure To Conform To Statements

"Advertising injury" arising out of the failure of goods, products or services to conform with any statement of quality or performance made in your "advertisement".

h. Wrong Description Of Prices

"Advertising injury" arising out of the wrong description of the price of goods, products or services stated in your "advertisement".

i. Intellectual Property

"Personal and advertising injury" arising out of any actual or alleged infringement or violation of any of the following rights or laws, or any other "personal and advertising injury" alleged in any claim or "suit" that also alleges any such infringement or violation:

(1) Copyright;

(2) Patent;

(3) Trade dress;

(4) Trade name;

(5) Trademark;

(6) Trade secret; or

(7) Other intellectual property rights or laws.

This exclusion does not apply to:

(1) "Advertising injury" arising out of any actual or alleged infringement or violation of another's copyright, "title" or "slogan" in your "advertisement"; or

(2) Any other "personal and advertising injury" alleged in any claim or "suit" that also alleges any such infringement or violation of another's copyright, "title" or "slogan" in your "advertisement".

j. Insureds In Media And Internet Type Businesses

"Personal and advertising injury" caused by an offense committed by an insured whose business is:

(1) Advertising, "broadcasting" or publishing;

© 2017 The Travelers Indemnity Company. All rights reserved.
Includes copyrighted material of Insurance Services Office, Inc. with its permission.

(2) Designing or determining content of websites for others; or

(3) An Internet search, access, content or service provider.

However, this exclusion does not apply to Paragraphs **a.(1)**, **(2)** and **(3)** of the definition of "personal injury".

For the purposes of this exclusion:

(1) Creating and producing correspondence written in the conduct of your business, bulletins, financial or annual reports, or newsletters about your goods, products or services will not be considered the business of publishing; and

(2) The placing of frames, borders or links, or advertising, for you or others anywhere on the Internet will not, by itself, be considered the business of advertising, "broadcasting" or publishing.

k. Electronic Chatrooms Or Bulletin Boards

"Personal and advertising injury" arising out of an electronic chatroom or bulletin board the insured hosts or owns, or over which the insured exercises control.

l. Unauthorized Use Of Another's Name Or Product

"Personal and advertising injury" arising out of the unauthorized use of another's name or product in your e-mail address, domain name or metatag, or any other similar tactics to mislead another's potential customers.

m. Pollution

"Personal and advertising injury" arising out of the actual, alleged or threatened discharge, dispersal, seepage, migration, release or escape of "pollutants" at any time.

n. Pollution-Related

Any loss, cost or expense arising out of any:

(1) Request, demand, order or statutory or regulatory requirement that any insured or others test for, monitor, clean up, remove, contain, treat, detoxify or neutralize, or in any way respond to, or assess the effects of, "pollutants"; or

(2) Claim or suit by or on behalf of any governmental authority or any other person or organization because of testing for, monitoring, cleaning up, removing, containing, treating, detoxifying or neutralizing, or in any way responding to, or assessing the effects of, "pollutants".

o. War

"Personal and advertising injury" arising out of:

(1) War, including undeclared or civil war;

(2) Warlike action by a military force, including action in hindering or defending against an actual or expected attack, by any government, sovereign or other authority using military personnel or other agents; or

(3) Insurrection, rebellion, revolution, usurped power, or action taken by governmental authority in hindering or defending against any of these.

p. Unsolicited Communication

"Personal and advertising injury" arising out of any actual or alleged violation of any law that restricts or prohibits the sending, transmitting or distributing of "unsolicited communication".

q. Access Or Disclosure Of Confidential Or Personal Information

"Personal and advertising injury" arising out of any access to or disclosure of any person's or organization's confidential or personal information.

r. Asbestos

(1) "Personal and advertising injury" arising out of the actual or alleged presence or actual, alleged or threatened dispersal of asbestos, asbestos fibers or products containing asbestos, provided that the "personal and advertising injury" is caused or contributed to by the hazardous properties of asbestos.

(2) "Personal and advertising injury" arising out of the actual or alleged presence or actual, alleged or threatened dispersal of any solid, liquid, gaseous or thermal irritant or contaminant, including smoke, vapors, soot, fumes, acids, alkalis, chemicals and waste, and that are part of any claim or "suit" which also alleges any "personal and advertising injury" described in Paragraph **(1)** above.

(3) Any loss, cost or expense arising out of any:

(a) Request, demand, order or statutory or regulatory requirement that any insured or others test for, monitor, clean up, remove, contain, treat, detoxify or neutralize, or in any way respond to, or

© 2017 The Travelers Indemnity Company. All rights reserved.
Includes copyrighted material of Insurance Services Office, Inc. with its permission.

assess the effects of, asbestos, asbestos fibers or products containing asbestos; or

(b) Claim or suit by or on behalf of any governmental authority or any other person or organization because of testing for, monitoring, cleaning up, removing, containing, treating, detoxifying or neutralizing, or in any way responding to, or assessing the effects of, asbestos, asbestos fibers or products containing asbestos.

s. Employment-Related Practices

"Personal injury" to:

(1) A person arising out of any:

(a) Refusal to employ that person;

(b) Termination of that person's employment; or

(c) Employment-related practice, policy, act or omission, such as coercion, demotion, evaluation, reassignment, discipline, failure to promote or advance, harassment, humiliation, discrimination, libel, slander, violation of the person's right of privacy, malicious prosecution or false arrest, detention or imprisonment applied to or directed at that person, regardless of whether such practice, policy, act or omission occurs, is applied or is committed before, during or after the time of that person's employment; or

(2) The spouse, child, parent, brother or sister of that person as a consequence of "personal injury" to that person at whom any of the employment-related practices described in Paragraph **(a)**, **(b)**, or **(c)** above is directed.

This exclusion applies whether the insured may be liable as an employer or in any other capacity and to any obligation to share damages with or repay someone else who must pay damages because of the "personal injury".

COVERAGE C – MEDICAL PAYMENTS

1. Insuring Agreement

a. We will pay medical expenses as described below for "bodily injury" caused by an accident:

(1) On premises you own or rent;

(2) On ways next to premises you own or rent; or

(3) Because of your operations;

provided that:

(a) The accident takes place in the "coverage territory" and during the policy period;

(b) The expenses are incurred and reported to us within one year of the date of the accident; and

(c) The injured person submits to examination, at our expense, by physicians of our choice as often as we reasonably require.

b. We will make these payments regardless of fault. These payments will not exceed the applicable limit of insurance. We will pay reasonable expenses for:

(1) First aid administered at the time of an accident;

(2) Necessary medical, surgical, X-ray and dental services, including prosthetic devices; and

(3) Necessary ambulance, hospital, professional nursing and funeral services.

2. Exclusions

We will not pay expenses for "bodily injury":

a. Any Insured

To any insured, except "volunteer workers".

b. Hired Person

To a person hired to do work for or on behalf of any insured or a tenant of any insured.

c. Injury On Normally Occupied Premises

To a person injured on that part of premises you own or rent that the person normally occupies.

d. Workers' Compensation And Similar Laws

To a person, whether or not an "employee" of any insured, if benefits for the "bodily injury" are payable or must be provided under a workers' compensation or disability benefits law or a similar law.

e. Athletics Activities

To a person injured while practicing, instructing or participating in any physical exercises or games, sports, or athletic contests.

f. Products-Completed Operations Hazard

Included within the "products-completed operations hazard".

g. Coverage A Exclusions

Excluded under Coverage **A**.

© 2017 The Travelers Indemnity Company. All rights reserved.
Includes copyrighted material of Insurance Services Office, Inc. with its permission.

SUPPLEMENTARY PAYMENTS

1. We will pay, with respect to any claim we investigate or settle, or any "suit" against an insured we defend:

a. All expenses we incur.

b. Up to $2,500 for the cost of bail bonds required because of accidents or traffic law violations arising out of the use of any vehicle to which the Bodily Injury Liability Coverage applies. We do not have to furnish these bonds.

c. The cost of bonds to release attachments, but only for bond amounts within the applicable limit of insurance. We do not have to furnish these bonds.

d. All reasonable expenses incurred by the insured at our request to assist us in the investigation or defense of the claim or "suit", including actual loss of earnings up to $500 a day because of time off from work.

e. All court costs taxed against the insured in the "suit". However, these payments do not include attorneys' fees or attorneys' expenses taxed against the insured.

f. Prejudgment interest awarded against the insured on that part of the judgment we pay. If we make an offer to pay the applicable limit of insurance, we will not pay any prejudgment interest based on that period of time after the offer.

g. All interest on the full amount of any judgment that accrues after entry of the judgment and before we have paid, offered to pay, or deposited in court the part of the judgment that is within the applicable limit of insurance.

These payments will not reduce the limits of insurance.

2. If we defend an insured against a "suit" and an indemnitee of the insured is also named as a party to the "suit", we will defend that indemnitee if all of the following conditions are met:

a. The "suit" against the indemnitee seeks damages for which the insured has assumed the liability of the indemnitee in a contract or agreement that is an "insured contract";

b. This insurance applies to such liability assumed by the insured;

c. The obligation to defend, or the cost of the defense of, that indemnitee, has also been assumed by the insured in the same "insured contract";

d. The allegations in the "suit" and the information we know about the "occurrence" or offense are such that no conflict appears to exist between the interests of the insured and the interests of the indemnitee;

e. The indemnitee and the insured ask us to conduct and control the defense of that indemnitee against such "suit" and agree that we can assign the same counsel to defend the insured and the indemnitee; and

f. The indemnitee:

(1) Agrees in writing to:

(a) Cooperate with us in the investigation, settlement or defense of the "suit";

(b) Immediately send us copies of any demands, notices, summonses or legal papers received in connection with the "suit";

(c) Notify any other insurer whose coverage is available to the indemnitee; and

(d) Cooperate with us with respect to coordinating other applicable insurance available to the indemnitee; and

(2) Provides us with written authorization to:

(a) Obtain records and other information related to the "suit"; and

(b) Conduct and control the defense of the indemnitee in such "suit".

So long as the above conditions are met, attorneys' fees incurred by us in the defense of that indemnitee, necessary litigation expenses incurred by us and necessary litigation expenses incurred by the indemnitee at our request will be paid as Supplementary Payments. Notwithstanding the provisions of Paragraph **2.b.(2)** of Section **I** – Coverages – Coverage **A** – Bodily Injury And Property Damage Liability or Paragraph **2.e.** of Section **I** – Coverages – Coverage **B** – Personal And Advertising Injury Liability, such payments will not be deemed to be damages for "bodily injury", "property damage" or "personal injury", and will not reduce the limits of insurance.

Our obligation to defend an insured's indemnitee and to pay for attorneys' fees and necessary litigation expenses as Supplementary Payments ends when:

© 2017 The Travelers Indemnity Company. All rights reserved.
Includes copyrighted material of Insurance Services Office, Inc. with its permission.

a. We have used up the applicable limit of insurance in the payment of judgments, settlements or medical expenses; or

b. The conditions set forth above, or the terms of the agreement described in Paragraph **f.** above, are no longer met.

SECTION II – WHO IS AN INSURED

1. If you are designated in the Declarations as:

a. An individual, you and your spouse are insureds, but only with respect to the conduct of a business of which you are the sole owner.

b. A partnership or joint venture, you are an insured. Your members, your partners, and their spouses are also insureds, but only with respect to the conduct of your business.

c. A limited liability company, you are an insured. Your members are also insureds, but only with respect to the conduct of your business. Your managers are insureds, but only with respect to their duties as your managers.

d. An organization other than a partnership, joint venture or limited liability company, you are an insured. Your "executive officers" and directors are insureds, but only with respect to their duties as your officers or directors. Your stockholders are also insureds, but only with respect to their liability as stockholders.

e. A trust, you are an insured. Your trustees are also insureds, but only with respect to their duties as trustees.

2. Each of the following is also an insured:

a. Your "volunteer workers" only while performing duties related to the conduct of your business, or your "employees", other than either your "executive officers" (if you are an organization other than a partnership, joint venture or limited liability company) or your managers (if you are a limited liability company), but only for acts within the scope of their employment by you or while performing duties related to the conduct of your business. However, none of these "employees" or "volunteer workers" are insureds for:

(1) "Bodily injury" or "personal injury":

(a) To you, to your partners or members (if you are a partnership or joint venture), to your members (if you are a limited liability company), to a co-"employee" while in the course of his or her employment or performing duties related to the conduct of your business, or to your other "volunteer workers" while performing duties related to the conduct of your business;

(b) To the spouse, child, parent, brother or sister of that co-"employee" or "volunteer worker" as a consequence of Paragraph **(1)(a)** above;

(c) For which there is any obligation to share damages with or repay someone else who must pay damages because of the injury described in Paragraph **(1)(a)** or **(b)** above; or

(d) Arising out of his or her providing or failing to provide professional health care services.

Unless you are in the business or occupation of providing professional health care services, Paragraphs **(1)(a)**, **(b)**, **(c)** and **(d)** above do not apply to "bodily injury" arising out of providing or failing to provide first aid or "Good Samaritan services" by any of your "employees" or "volunteer workers", other than an employed or volunteer doctor. Any such "employees" or "volunteer workers" providing or failing to provide first aid or "Good Samaritan services" during their work hours for you will be deemed to be acting within the scope of their employment by you or performing duties related to the conduct of your business.

(2) "Property damage" to property:

(a) Owned, occupied or used by;

(b) Rented to, in the care, custody or control of, or over which physical control is being exercised for any purpose by;

you, any of your "employees", "volunteer workers", any partner or member (if you are a partnership or joint venture), or any member (if you are a limited liability company).

b. Any person (other than your "employee" or "volunteer worker"), or any organization, while acting as your real estate manager.

c. Any person or organization having proper temporary custody of your property if you die, but only:

(1) With respect to liability arising out of the maintenance or use of that property; and

(2) Until your legal representative has been appointed.

© 2017 The Travelers Indemnity Company. All rights reserved.
Includes copyrighted material of Insurance Services Office, Inc. with its permission.

d. Your legal representative if you die, but only with respect to duties as such. That representative will have all your rights and duties under this Coverage Part.

e. Any person or organization that, with your express or implied consent, either uses or is responsible for the use of a watercraft that you do not own that is:

(1) 50 feet long or less; and

(2) Not being used to carry any person or property for a charge.

3. Any organization you newly acquire or form, other than a partnership, joint venture or limited liability company, and of which you are the sole owner or in which you maintain an ownership interest of more than 50%, will qualify as a Named Insured if there is no other similar insurance available to that organization. However:

a. Coverage under this provision is afforded only until the 180th day after you acquire or form the organization or the end of the policy period, whichever is earlier;

b. Coverage **A** does not apply to "bodily injury" or "property damage" that occurred before you acquired or formed the organization; and

c. Coverage **B** does not apply to "personal and advertising injury" arising out of an offense committed before you acquired or formed the organization.

For the purposes of Paragraph **1.** of Section **II** – Who Is An Insured, each such organization will be deemed to be designated in the Declarations as:

a. An organization, other than a partnership, joint venture or limited liability company; or

b. A trust;

as indicated in its name or the documents that govern its structure.

4. Any person or organization that is a premises owner, manager or lessor and that you have agreed in a written contract or agreement to include as an additional insured on this Coverage Part is an insured, but only with respect to liability for "bodily injury", "property damage" or "personal and advertising injury" that:

a. Is "bodily injury" or "property damage" that occurs, or is "personal and advertising injury" caused by an offense that is committed, subsequent to the signing of that contract or agreement; and

b. Arises out of the ownership, maintenance or use of that part of any premises leased to you.

The insurance provided to such premises owner, manager or lessor is subject to the following provisions:

a. The limits of insurance provided to such premises owner, manager or lessor will be the minimum limits that you agreed to provide in the written contract or agreement, or the limits shown in the Declarations, whichever are less.

b. The insurance provided to such premises owner, manager or lessor does not apply to:

(1) Any "bodily injury" or "property damage" that occurs, or "personal and advertising injury" caused by an offense that is committed, after you cease to be a tenant in that premises; or

(2) Structural alterations, new construction or demolition operations performed by or on behalf of such premises owner, manager or lessor.

5. Any person or organization that is an equipment lessor and that you have agreed in a written contract or agreement to include as an additional insured on this Coverage Part is an insured, but only with respect to liability for "bodily injury", "property damage", or "personal and advertising injury" that:

a. Is "bodily injury" or "property damage" that occurs, or is "personal and advertising injury" caused by an offense that is committed, subsequent to the signing of that contract or agreement; and

b. Is caused, in whole or in part, by your acts or omissions in the maintenance, operation or use of equipment leased to you by such equipment lessor.

The insurance provided to such equipment lessor is subject to the following provisions:

a. The limits of insurance provided to such equipment lessor will be the minimum limits that you agreed to provide in the written contract or agreement, or the limits shown in the Declarations, whichever are less.

b. The insurance provided to such equipment lessor does not apply to any "bodily injury" or "property damage" that occurs, or "personal and advertising injury" caused by an offense that is committed, after the equipment lease expires.

No person or organization is an insured with respect to the conduct of any current or past partnership, joint

© 2017 The Travelers Indemnity Company. All rights reserved.
Includes copyrighted material of Insurance Services Office, Inc. with its permission.

venture or limited liability company that is not shown as a Named Insured in the Declarations. This paragraph does not apply to any such partnership, joint venture or limited liability company that otherwise qualifies as an insured under Section **II** – Who Is An Insured.

SECTION III – LIMITS OF INSURANCE

1. The Limits of Insurance shown in the Declarations and the rules below fix the most we will pay regardless of the number of:
   a. Insureds;
   b. Claims made or "suits" brought; or
   c. Persons or organizations making claims or bringing "suits".
2. The General Aggregate Limit is the most we will pay for the sum of:
   a. Medical expenses under Coverage **C**;
   b. Damages under Coverage **A**, except damages because of "bodily injury" or "property damage" included in the "products-completed operations hazard"; and
   c. Damages under Coverage **B**.
3. The Products-Completed Operations Aggregate Limit is the most we will pay under Coverage **A** for damages because of "bodily injury" and "property damage" included in the "products-completed operations hazard".
4. Subject to Paragraph **2.** above, the Personal And Advertising Injury Limit is the most we will pay under Coverage **B** for the sum of all damages because of all "personal injury" and "advertising injury" sustained by any one person or organization.
5. Subject to Paragraph **2.** or **3.** above, whichever applies, the Each Occurrence Limit is the most we will pay for the sum of:
   a. Damages under Coverage **A**; and
   b. Medical expenses under Coverage **C**;

   because of all "bodily injury" and "property damage" arising out of any one "occurrence".

   For the purposes of determining the applicable Each Occurrence Limit, all related acts or omissions committed in providing or failing to provide first aid or "Good Samaritan services" to any one person will be deemed to be one "occurrence".
6. Subject to Paragraph **5.** above, the Damage To Premises Rented To You Limit is the most we will pay under Coverage **A** for damages because of "premises damage" to any one premises. The Damage To Premises Rented To You Limit will be:
   a. The amount shown for the Damage To Premises Rented To You Limit in the Declarations of this Coverage Part; or
   b. $300,000 if no amount is shown for the Damage To Premises Rented To You Limit in the Declarations of this Coverage Part.
7. Subject to Paragraph **5.** above, the Medical Expense Limit is the most we will pay under Coverage **C** for all medical expenses because of "bodily injury" sustained by any one person.

The Limits of Insurance of this Coverage Part apply separately to each consecutive annual period and to any remaining period of less than 12 months, starting with the beginning of the policy period shown in the Declarations, unless the policy period is extended after issuance for an additional period of less than 12 months. In that case, the additional period will be deemed part of the last preceding period for purposes of determining the Limits of Insurance.

SECTION IV – COMMERCIAL GENERAL LIABILITY CONDITIONS

1. **Bankruptcy**

   Bankruptcy or insolvency of the insured or of the insured's estate will not relieve us of our obligations under this Coverage Part.

2. **Duties In The Event Of Occurrence, Offense, Claim Or Suit**
   a. You must see to it that we are notified as soon as practicable of an "occurrence" or an offense which may result in a claim. To the extent possible, notice should include:
      (1) How, when and where the "occurrence" or offense took place;
      (2) The names and addresses of any injured persons and witnesses; and
      (3) The nature and location of any injury or damage arising out of the "occurrence" or offense.
   b. If a claim is made or "suit" is brought against any insured, you must:
      (1) Immediately record the specifics of the claim or "suit" and the date received; and
      (2) Notify us as soon as practicable.

      You must see to it that we receive written notice of the claim or "suit" as soon as practicable.
   c. You and any other involved insured must:
      (1) Immediately send us copies of any demands, notices, summonses or legal papers received in connection with the claim or "suit";

© 2017 The Travelers Indemnity Company. All rights reserved.
Includes copyrighted material of Insurance Services Office, Inc. with its permission.

(2) Authorize us to obtain records and other information;

(3) Cooperate with us in the investigation or settlement of the claim or defense against the "suit"; and

(4) Assist us, upon our request, in the enforcement of any right against any person or organization which may be liable to the insured because of injury or damage to which this insurance may also apply.

d. No insured will, except at that insured's own cost, voluntarily make a payment, assume any obligation, or incur any expense, other than for first aid, without our consent.

e. The following provisions apply to Paragraph **a.** above, but only for purposes of the insurance provided under this Coverage Part to you or any insured listed in Paragraph **1.** or **2.** of Section **II** – Who Is An Insured:

(1) Notice to us of such "occurrence" or offense must be given as soon as practicable only after the "occurrence" or offense is known to you (if you are an individual), any of your partners or members who is an individual (if you are a partnership or joint venture), any of your managers who is an individual (if you are a limited liability company), any of your "executive officers" or directors (if you are an organization other than a partnership, joint venture, or limited liability company), any of your trustees who is an individual (if you are a trust) or any "employee" authorized by you to give notice of an "occurrence" or offense.

(2) If you are a partnership, joint venture, limited liability company or trust, and none of your partners, joint venture members, managers or trustees are individuals, notice to us of such "occurrence" or offense must be given as soon as practicable only after the "occurrence" or offense is known by:

(a) Any individual who is:

(i) A partner or member of any partnership or joint venture;

(ii) A manager of any limited liability company;

(iii) An executive officer or director of any other organization; or

(iv) A trustee of any trust;

that is your partner, joint venture member, manager or trustee; or

(b) Any employee authorized by such partnership, joint venture, limited liability company, trust or other organization to give notice of an "occurrence" or offense.

(3) Notice to us of such "occurrence" or offense will be deemed to be given as soon as practicable if it is given in good faith as soon as practicable to your workers' compensation insurer. This applies only if you subsequently give notice to us of the "occurrence" or offense as soon as practicable after any of the persons described in Paragraph **e.(1)** or **(2)** above discovers that the "occurrence" or offense may result in sums to which the insurance provided under this Coverage Part may apply.

However, if this policy includes an endorsement that provides limited coverage for "bodily injury" or "property damage" or pollution costs arising out of a discharge, release or escape of "pollutants" which contains a requirement that the discharge, release or escape of "pollutants" must be reported to us within a specific number of days after its abrupt commencement, this Paragraph **e.** does not affect that requirement.

3. Legal Action Against Us

No person or organization has a right under this Coverage Part:

a. To join us as a party or otherwise bring us into a "suit" asking for damages from an insured; or

b. To sue us on this Coverage Part unless all of its terms have been fully complied with.

A person or organization may sue us to recover on an agreed settlement or on a final judgment against an insured; but we will not be liable for damages that are not payable under the terms of this Coverage Part or that are in excess of the applicable limit of insurance. An agreed settlement means a settlement and release of liability signed by us, the insured, and the claimant or the claimant's legal representative.

© 2017 The Travelers Indemnity Company. All rights reserved.
Includes copyrighted material of Insurance Services Office, Inc. with its permission.

4. Other Insurance

If valid and collectible other insurance is available to the insured for a loss we cover under Coverages **A** or **B** of this Coverage Part, our obligations are limited as described in Paragraphs **a.** and **b.** below.

As used anywhere in this Coverage Part, other insurance means insurance, or the funding of losses, that is provided by, through or on behalf of:

(i) Another insurance company;

(ii) Us or any of our affiliated insurance companies, except when the Non cumulation of Each Occurrence Limit provision of Paragraph **5.** of Section **III** – Limits Of Insurance or the Non cumulation of Personal and Advertising Injury Limit provision of Paragraph **4.** of Section **III** – Limits of Insurance applies because the Amendment – Non Cumulation Of Each Occurrence Limit Of Liability And Non Cumulation Of Personal And Advertising Injury Limit endorsement is included in this policy;

(iii) Any risk retention group; or

(iv) Any self-insurance method or program, in which case the insured will be deemed to be the provider of other insurance.

Other insurance does not include umbrella insurance, or excess insurance, that was bought specifically to apply in excess of the Limits of Insurance shown in the Declarations of this Coverage Part.

As used anywhere in this Coverage Part, other insurer means a provider of other insurance. As used in Paragraph **c.** below, insurer means a provider of insurance.

a. Primary Insurance

This insurance is primary except when Paragraph **b.** below applies. If this insurance is primary, our obligations are not affected unless any of the other insurance is also primary. Then, we will share with all that other insurance by the method described in Paragraph **c.** below, except when Paragraph **d.** below applies.

b. Excess Insurance

(1) This insurance is excess over:

(a) Any of the other insurance, whether primary, excess, contingent or on any other basis:

(i) That is Fire, Extended Coverage, Builder's Risk, Installation Risk or similar coverage for "your work";

(ii) That is insurance for "premises damage";

(iii) If the loss arises out of the maintenance or use of aircraft, "autos" or watercraft to the extent not subject to any exclusion in this Coverage Part that applies to aircraft, "autos" or watercraft;

(iv) That is insurance available to a premises owner, manager or lessor that qualifies as an insured under Paragraph **4.** of Section **II** – Who Is An Insured, except when Paragraph **d.** below applies; or

(v) That is insurance available to an equipment lessor that qualifies as an insured under Paragraph **5.** of Section **II** – Who Is An Insured, except when Paragraph **d.** below applies.

(b) Any of the other insurance, whether primary, excess, contingent or on any other basis, that is available to the insured when the insured is an additional insured, or is any other insured that does not qualify as a named insured, under such other insurance.

(2) When this insurance is excess, we will have no duty under Coverages **A** or **B** to defend the insured against any "suit" if any other insurer has a duty to defend the insured against that "suit". If no other insurer defends, we will undertake to do so, but we will be entitled to the insured's rights against all those other insurers.

(3) When this insurance is excess over other insurance, we will pay only our share of the amount of the loss, if any, that exceeds the sum of:

(a) The total amount that all such other insurance would pay for the loss in the absence of this insurance; and

(b) The total of all deductible and self-insured amounts under all that other insurance.

(4) We will share the remaining loss, if any, with any other insurance that is not described in this Excess Insurance provision and was not bought specifically to apply in excess of the Limits of Insurance shown in the Declarations of this Coverage Part.

© 2017 The Travelers Indemnity Company. All rights reserved.
Includes copyrighted material of Insurance Services Office, Inc. with its permission.

c. Method Of Sharing

If all of the other insurance permits contribution by equal shares, we will follow this method also. Under this approach each insurer contributes equal amounts until it has paid its applicable limit of insurance or none of the loss remains, whichever comes first.

If any of the other insurance does not permit contribution by equal shares, we will contribute by limits. Under this method, each insurer's share is based on the ratio of its applicable limit of insurance to the total applicable limits of insurance of all insurers.

d. Primary And Non-Contributory Insurance If Required By Written Contract

If you specifically agree in a written contract or agreement that the insurance afforded to an insured under this Coverage Part must apply on a primary basis, or a primary and non-contributory basis, this insurance is primary to other insurance that is available to such insured which covers such insured as a named insured, and we will not share with that other insurance, provided that:

(1) The "bodily injury" or "property damage" for which coverage is sought occurs; and

(2) The "personal and advertising injury" for which coverage is sought is caused by an offense that is committed;

subsequent to the signing of that contract or agreement by you.

5. Premium Audit

a. We will compute all premiums for this Coverage Part in accordance with our rules and rates.

b. Premium shown in this Coverage Part as advance premium is a deposit premium only. At the close of each audit period we will compute the earned premium for that period and send notice to the first Named Insured. The due date for audit and retrospective premiums is the date shown as the due date on the bill. If the sum of the advance and audit premiums paid for the policy period is greater than the earned premium, we will return the excess to the first Named Insured.

c. The first Named Insured must keep records of the information we need for premium computation, and send us copies at such times as we may request.

6. Representations

By accepting this policy, you agree:

a. The statements in the Declarations are accurate and complete;

b. Those statements are based upon representations you made to us; and

c. We have issued this policy in reliance upon your representations.

The unintentional omission of, or unintentional error in, any information provided by you which we relied upon in issuing this policy will not prejudice your rights under this insurance. However, this provision does not affect our right to collect additional premium or to exercise our rights of cancellation or nonrenewal in accordance with applicable insurance laws or regulations.

7. Separation Of Insureds

Except with respect to the Limits of Insurance, and any rights or duties specifically assigned in this Coverage Part to the first Named Insured, this insurance applies:

a. As if each Named Insured were the only Named Insured; and

b. Separately to each insured against whom claim is made or "suit" is brought.

8. Transfer Of Rights Of Recovery Against Others To Us

If the insured has rights to recover all or part of any payment we have made under this Coverage Part, those rights are transferred to us. The insured must do nothing after loss to impair them. At our request, the insured will bring "suit" or transfer those rights to us and help us enforce them.

9. When We Do Not Renew

If we decide not to renew this Coverage Part, we will mail or deliver to the first Named Insured shown in the Declarations written notice of the nonrenewal not less than 30 days before the expiration date.

If notice is mailed, proof of mailing will be sufficient proof of notice.

SECTION V – DEFINITIONS

1. "Advertisement" means a notice that is broadcast or published to the general public or specific market segments about your goods, products or services for the purpose of attracting customers or supporters. For the purposes of this definition:

a. Notices that are published include material placed on the Internet or on similar electronic means of communication; and

b. Regarding websites, only that part of a website that is about your goods, products or services for the purposes of attracting customers or supporters is considered an advertisement.

© 2017 The Travelers Indemnity Company. All rights reserved.
Includes copyrighted material of Insurance Services Office, Inc. with its permission.

2. "Advertising injury":

a. Means injury caused by one or more of the following offenses:

(1) Oral or written publication, including publication by electronic means, of material in your "advertisement" that slanders or libels a person or organization or disparages a person's or organization's goods, products or services, provided that the claim is made or the "suit" is brought by a person or organization that claims to have been slandered or libeled, or that claims to have had its goods, products or services disparaged;

(2) Oral or written publication, including publication by electronic means, of material in your "advertisement" that:

(a) Appropriates a person's name, voice, photograph or likeness; or

(b) Unreasonably places a person in a false light; or

(3) Infringement of copyright, "title" or "slogan" in your "advertisement", provided that the claim is made or the "suit" is brought by a person or organization that claims ownership of such copyright, "title" or "slogan".

b. Includes "bodily injury" caused by one or more of the offenses described in Paragraph **a.** above.

3. "Auto" means:

a. A land motor vehicle, trailer or semitrailer designed for travel on public roads, including any attached machinery or equipment; or

b. Any other land vehicle that is subject to a compulsory or financial responsibility law, or other motor vehicle insurance law, where it is licensed or principally garaged.

However, "auto" does not include "mobile equipment".

4. "Bodily injury" means:

a. Physical harm, including sickness or disease, sustained by a person; or

b. Mental anguish, injury or illness, or emotional distress, resulting at any time from such physical harm, sickness or disease.

5. "Broadcasting" means transmitting any audio or visual material for any purpose:

a. By radio or television; or

b. In, by or with any other electronic means of communication, such as the Internet, if that material is part of:

(1) Radio or television programming being transmitted;

(2) Other entertainment, educational, instructional, music or news programming being transmitted; or

(3) Advertising transmitted with any of such programming.

6. "Coverage territory" means:

a. The United States of America (including its territories and possessions), Puerto Rico and Canada;

b. International waters or airspace, but only if the injury or damage occurs in the course of travel or transportation between any places included in Paragraph **a.** above; or

c. All other parts of the world if the injury or damage arises out of:

(1) Goods or products made or sold by you in the territory described in Paragraph **a.** above;

(2) The activities of a person whose home is in the territory described in Paragraph **a.** above, but is away for a short time on your business; or

(3) "Personal and advertising injury" offenses that take place through the Internet or similar electronic means of communication;

provided the insured's responsibility to pay damages is determined in a "suit" on the merits in the territory described in Paragraph **a.** above, or in a settlement we agree to.

7. "Electronic data" means information, facts or programs stored as or on, created or used on, or transmitted to or from computer software (including systems and applications software), hard or floppy disks, CD-ROMs, tapes, drives, cells, data processing devices or any other media which are used with electronically controlled equipment.

8. "Employee" includes a "leased worker". "Employee" does not include a "temporary worker".

9. "Executive officer" means a person holding any of the officer positions created by your charter, constitution, bylaws or any other similar governing document.

© 2017 The Travelers Indemnity Company. All rights reserved.
Includes copyrighted material of Insurance Services Office, Inc. with its permission.

10. "Good Samaritan services" means any emergency medical services for which no compensation is demanded or received.

11. "Hostile fire" means a fire which becomes uncontrollable or breaks out from where it was intended to be.

12. "Impaired property" means tangible property, other than "your product" or "your work", that cannot be used or is less useful because:

a. It incorporates "your product" or "your work" that is known or thought to be defective, deficient, inadequate or dangerous; or

b. You have failed to fulfill the terms of a contract or agreement;

if such property can be restored to use by the repair, replacement, adjustment or removal of "your product" or "your work" or your fulfilling the terms of the contract or agreement.

13. "Insured contract" means:

a. A contract for a lease of premises. However, that portion of the contract for a lease of premises that indemnifies any person or organization for "premises damage" is not an "insured contract";

b. A sidetrack agreement;

c. Any easement or license agreement, except in connection with construction or demolition operations on or within 50 feet of a railroad;

d. An obligation, as required by ordinance, to indemnify a municipality, except in connection with work for a municipality;

e. An elevator maintenance agreement;

f. That part of any other contract or agreement pertaining to your business (including an indemnification of a municipality in connection with work performed for a municipality) under which you assume the tort liability of another party to pay for "bodily injury", "property damage" or "personal injury" to a third person or organization. Tort liability means a liability that would be imposed by law in the absence of any contract or agreement.

Paragraph **f.** does not include that part of any contract or agreement:

(1) That indemnifies a railroad for "bodily injury" or "property damage" arising out of construction or demolition operations, within 50 feet of any railroad property and affecting any railroad bridge or trestle, tracks, roadbeds, tunnel, underpass or crossing;

(2) That indemnifies an architect, engineer or surveyor for injury or damage arising out of:

(a) Preparing, approving, or failing to prepare or approve, maps, shop drawings, opinions, reports, surveys, field orders, change orders or drawings and specifications; or

(b) Giving directions or instructions, or failing to give them, if that is the primary cause of the injury or damage; or

(3) Under which the insured, if an architect, engineer or surveyor, assumes liability for an injury or damage arising out of the insured's rendering or failure to render professional services, including those listed in Paragraph **(2)** above and supervisory, inspection, architectural or engineering activities.

14. "Leased worker" means a person leased to you by a labor leasing firm under an agreement between you and the labor leasing firm, to perform duties related to the conduct of your business. "Leased worker" does not include a "temporary worker".

15. "Loading or unloading" means the handling of property:

a. After it is moved from the place where it is accepted for movement into or onto an aircraft, watercraft or "auto";

b. While it is in or on an aircraft, watercraft or "auto"; or

c. While it is being moved from an aircraft, watercraft or "auto" to the place where it is finally delivered;

but "loading or unloading" does not include the movement of property by means of a mechanical device, other than a hand truck, that is not attached to the aircraft, watercraft or "auto".

16. "Mobile equipment" means any of the following types of land vehicles, including any attached machinery or equipment:

a. Bulldozers, farm machinery, forklifts and other vehicles designed for use principally off public roads;

b. Vehicles maintained for use solely on or next to premises you own or rent;

c. Vehicles that travel on crawler treads;

© 2017 The Travelers Indemnity Company. All rights reserved.
Includes copyrighted material of Insurance Services Office, Inc. with its permission.

d. Vehicles, whether self-propelled or not, maintained primarily to provide mobility to permanently mounted:

(1) Power cranes, shovels, loaders, diggers or drills; or

(2) Road construction or resurfacing equipment such as graders, scrapers or rollers;

e. Vehicles not described in Paragraph **a.**, **b.**, **c.** or **d.** above that are not self-propelled and are maintained primarily to provide mobility to permanently attached equipment of the following types:

(1) Air compressors, pumps and generators, including spraying, welding, building cleaning, geophysical exploration, lighting and well servicing equipment; or

(2) Cherry pickers and similar devices used to raise or lower workers;

f. Vehicles not described in Paragraph **a.**, **b.**, **c.** or **d.** above maintained primarily for purposes other than the transportation of persons or cargo.

However, self-propelled vehicles with the following types of permanently attached equipment are not "mobile equipment" but will be considered "autos":

(1) Equipment designed primarily for:

(a) Snow removal;

(b) Road maintenance, but not construction or resurfacing; or

(c) Street cleaning;

(2) Cherry pickers and similar devices mounted on automobile or truck chassis and used to raise or lower workers; and

(3) Air compressors, pumps and generators, including spraying, welding, building cleaning, geophysical exploration, lighting and well servicing equipment.

However, "mobile equipment" does not include any land vehicle that is subject to a compulsory or financial responsibility law, or other motor vehicle insurance law, where it is licensed or principally garaged. Such land vehicles are considered "autos".

17. "Occurrence" means:

a. An accident, including continuous or repeated exposure to substantially the same general harmful conditions; or

b. An act or omission committed in providing or failing to provide first aid or "Good Samaritan services" to a person, unless you are in the business or occupation of providing professional health care services.

18. "Personal and advertising injury" means "personal injury" or "advertising injury".

19. "Personal injury":

a. Means injury, other than "advertising injury", caused by one or more of the following offenses:

(1) False arrest, detention or imprisonment;

(2) Malicious prosecution;

(3) The wrongful eviction from, wrongful entry into, or invasion of the right of private occupancy of a room, dwelling or premises that a person occupies, provided that the wrongful eviction, wrongful entry or invasion of the right of private occupancy is committed by or on behalf of the owner, landlord or lessor of that room, dwelling or premises;

(4) Oral or written publication, including publication by electronic means, of material that slanders or libels a person or organization or disparages a person's or organization's goods, products or services, provided that the claim is made or the "suit" is brought by a person or organization that claims to have been slandered or libeled, or that claims to have had its goods, products or services disparaged; or

(5) Oral or written publication, including publication by electronic means, of material that:

(a) Appropriates a person's name, voice, photograph or likeness; or

(b) Unreasonably places a person in a false light.

b. Includes "bodily injury" caused by one or more of the offenses described in Paragraph **a.** above.

20. "Pollutants" mean any solid, liquid, gaseous or thermal irritant or contaminant, including smoke, vapor, soot, fumes, acids, alkalis, chemicals and waste. Waste includes materials to be recycled, reconditioned or reclaimed.

© 2017 The Travelers Indemnity Company. All rights reserved.
Includes copyrighted material of Insurance Services Office, Inc. with its permission.

21. "Premises damage" means:

a. With respect to the first paragraph of the exceptions in Exclusion **j.** of Section **I** – Coverage **A** – Bodily Injury And Property Damage Liability, "property damage" to any premises while rented to you for a period of seven or fewer consecutive days, including the contents of such premises; or

b. With respect to the exception to Exclusions **c.** through **n.** in the last paragraph of Paragraph **2.** of Section **I** – Coverage **A** – Bodily Injury And Property Damage Liability, "property damage" to any premises while rented to you for a period of more than seven consecutive days, or while temporarily occupied by you with permission of the owner, caused by:

(1) Fire;

(2) Explosion;

(3) Lightning;

(4) Smoke resulting from fire, explosion or lightning; or

(5) Water.

But "premises damage" under this Paragraph **b.** does not include "property damage" to any premises caused by:

(1) Rupture, bursting, or operation of pressure relief devices;

(2) Rupture or bursting due to expansion or swelling of the contents of any building or structure caused by or resulting from water; or

(3) Explosion of steam boilers, steam pipes, steam engines or steam turbines.

22. "Products-completed operations hazard":

a. Includes all "bodily injury" and "property damage" occurring away from premises you own or rent and arising out of "your product" or "your work" except:

(1) Products that are still in your physical possession; or

(2) Work that has not yet been completed or abandoned. However, "your work" will be deemed completed at the earliest of the following times:

(a) When all of the work called for in your contract has been completed.

(b) When all of the work to be done at the job site has been completed if your contract calls for work at more than one job site.

(c) When that part of the work done at a job site has been put to its intended use by any person or organization other than another contractor or subcontractor working on the same project.

Work that may need service, maintenance, correction, repair or replacement, but which is otherwise complete, will be treated as completed.

b. Does not include "bodily injury" or "property damage" arising out of:

(1) The transportation of property, unless the injury or damage arises out of a condition in or on a vehicle not owned or operated by you, and that condition was created by the "loading or unloading" of that vehicle by any insured;

(2) The existence of tools, uninstalled equipment or abandoned or unused materials; or

(3) Products or operations for which the classification, listed in the Declarations or in a policy Schedule, states that products-completed operations are subject to the General Aggregate Limit.

23. "Property damage" means:

a. Physical injury to tangible property, including all resulting loss of use of that property. All such loss of use will be deemed to occur at the time of the physical injury that caused it; or

b. Loss of use of tangible property that is not physically injured. All such loss of use will be deemed to occur at the time of the "occurrence" that caused it.

For the purposes of this insurance, "electronic data" is not tangible property.

24. "Slogan":

a. Means a phrase that others use for the purpose of attracting attention in their advertising.

b. Does not include a phrase used as, or in, the name of:

(1) Any person or organization, other than you; or

(2) Any business, or any of the premises, goods, products, services or work, of any person or organization, other than you.

© 2017 The Travelers Indemnity Company. All rights reserved.
Includes copyrighted material of Insurance Services Office, Inc. with its permission.

25. "Suit" means a civil proceeding in which damages because of "bodily injury", "property damage" or "personal and advertising injury" to which this insurance applies are alleged. "Suit" includes:

a. An arbitration proceeding in which such damages are claimed and to which the insured must submit or does submit with our consent; or

b. Any other alternative dispute resolution proceeding in which such damages are claimed and to which the insured submits with our consent.

26. "Temporary worker" means a person who is furnished to you to substitute for a permanent "employee" on leave or to meet seasonal or short-term workload conditions.

27. "Title" means a name of a literary or artistic work.

28. "Unsolicited communication" means any communication, in any form, that the recipient of such communication did not specifically request to receive.

29. "Volunteer worker" means a person who is not your "employee", and who donates his or her work and acts at the direction of and within the scope of duties determined by you, and is not paid a fee, salary or other compensation by you or anyone else for their work performed for you.

30. "Your product":

a. Means:

(1) Any goods or products, other than real property, manufactured, sold, handled, distributed or disposed of by:

(a) You;

(b) Others trading under your name; or

(c) A person or organization whose business or assets you have acquired; and

(2) Containers (other than vehicles), materials, parts or equipment furnished in connection with such goods or products.

b. Includes:

(1) Warranties or representations made at any time with respect to the fitness, quality, durability, performance or use of "your product"; and

(2) The providing of or failure to provide warnings or instructions.

c. Does not include vending machines or other property rented to or located for the use of others but not sold.

31. "Your work":

a. Means:

(1) Work or operations performed by you or on your behalf; and

(2) Materials, parts or equipment furnished in connection with such work or operations.

b. Includes:

(1) Warranties or representations made at any time with respect to the fitness, quality, durability, performance or use of "your work"; and

(2) The providing of or failure to provide warnings or instructions.

© 2017 The Travelers Indemnity Company. All rights reserved.
Includes copyrighted material of Insurance Services Office, Inc. with its permission.

THIS ENDORSEMENT CHANGES THE POLICY. PLEASE READ IT CAREFULLY.

ADDITIONAL INSURED – OWNERS, LESSEES OR CONTRACTORS – COMPLETED OPERATIONS

This endorsement modifies insurance provided under the following:

COMMERCIAL GENERAL LIABILITY COVERAGE PART

SCHEDULE

Name Of Additional Insured Person(s) Or Organization(s):

As Required by Written Contract or Agreement

Location And Description Of Completed Operations

Information required to complete this Schedule, if not shown above, will be shown in the Declarations.

Section II – Who Is An Insured is amended to include as an additional insured the person(s) or organization(s) shown in the Schedule, but only with respect to liability for "bodily injury" or "property damage" caused, in whole or in part, by "your work" at the location designated and described in the schedule of this endorsement performed for that additional insured and included in the "products-completed operations hazard".

© ISO Properties, Inc., 2004

THIS ENDORSEMENT CHANGES THE POLICY. PLEASE READ IT CAREFULLY.

BLANKET ADDITIONAL INSURED – WRITTEN CONTRACTS (ARCHITECTS, ENGINEERS AND SURVEYORS)

This endorsement modifies insurance provided under the following:

COMMERCIAL GENERAL LIABILITY COVERAGE PART

1. The following is added to **SECTION II – WHO IS AN INSURED**:

Any person or organization that you agree in a "written contract requiring insurance" to include as an additional insured on this Coverage Part, but:

a. Only with respect to liability for "bodily injury", "property damage" or "personal injury"; and

b. If, and only to the extent that, the injury or damage is caused by acts or omissions of you or your subcontractor in the performance of "your work" to which the "written contract requiring insurance" applies. The person or organization does not qualify as an additional insured with respect to the independent acts or omissions of such person or organization.

The insurance provided to such additional insured is limited as follows:

c. In the event that the Limits of Insurance of this Coverage Part shown in the Declarations exceed the limits of liability required by the "written contract requiring insurance", the insurance provided to the additional insured shall be limited to the limits of liability required by that "written contract requiring insurance". This endorsement shall not increase the limits of insurance described in Section **III –** Limits Of Insurance.

d. This insurance does not apply to the rendering of or failure to render any "professional services" or construction management errors or omissions.

e. This insurance does not apply to "bodily injury" or "property damage" caused by "your work" and included in the "products-completed operations hazard" unless the "written contract requiring insurance" specifically requires you to provide such coverage for that additional insured, and then the insurance provided to the additional insured applies only to such "bodily injury" or "property damage" that occurs before the end of the period of time for which the "written contract requiring insurance" requires you to provide such coverage or the end of the policy period, whichever is earlier.

2. The following is added to Paragraph **4.a.** of **SECTION IV – COMMERCIAL GENERAL LIABILITY CONDITIONS**:

The insurance provided to the additional insured is excess over any valid and collectible "other insurance", whether primary, excess, contingent or on any other basis, that is available to the additional insured for a loss we cover. However, if you specifically agree in the "written contract requiring insurance" that this insurance provided to the additional insured under this Coverage Part must apply on a primary basis or a primary and non-contributory basis, this insurance is primary to "other insurance" available to the additional insured which covers that person or organization as a named insured for such loss, and we will not share with that "other insurance". But this insurance provided to the additional insured still is excess over any valid and collectible "other insurance", whether primary, excess, contingent or on any other basis, that is available to the additional insured when that person or organization is an additional insured under any "other insurance".

3. The following is added to **SECTION IV – COMMERCIAL GENERAL LIABILITY CONDITIONS**:

Duties Of An Additional Insured

As a condition of coverage provided to the additional insured:

a. The additional insured must give us written notice as soon as practicable of an "occurrence" or an offense which may result in a claim. To the extent possible, such notice should include:

© 2008 The Travelers Companies, Inc.

i. How, when and where the "occurrence" or offense took place;

ii. The names and addresses of any injured persons and witnesses; and

iii. The nature and location of any injury or damage arising out of the "occurrence" or offense.

b. If a claim is made or "suit" is brought against the additional insured, the additional insured must:

i. Immediately record the specifics of the claim or "suit" and the date received; and

ii. Notify us as soon as practicable.

The additional insured must see to it that we receive written notice of the claim or "suit" as soon as practicable.

c. The additional insured must immediately send us copies of all legal papers received in connection with the claim or "suit", cooperate with us in the investigation or settlement of the claim or defense against the "suit", and otherwise comply with all policy conditions.

d. The additional insured must tender the defense and indemnity of any claim or "suit" to any provider of other insurance which would cover the additional insured for a loss we cover. However, this condition does not affect whether this insurance provided to the additional insured is primary to that other insurance available to the additional insured which covers that person or organization as a named insured.

4. The following is added to the **DEFINITIONS** Section:

"Written contract requiring insurance" means that part of any written contract or agreement under which you are required to include a person or organization as an additional insured on this Coverage Part, provided that the "bodily injury" and "property damage" occurs and the "personal injury" is caused by an offense committed:

a. After the signing and execution of the contract or agreement by you;

b. While that part of the contract or agreement is in effect; and

c. Before the end of the policy period.

© 2008 The Travelers Companies, Inc.

THIS ENDORSEMENT CHANGES THE POLICY. PLEASE READ IT CAREFULLY.

BLANKET ADDITIONAL INSURED
(Includes Products-Completed Operations If Required By Contract)

This endorsement modifies insurance provided under the following:

COMMERCIAL GENERAL LIABILITY COVERAGE PART

PROVISIONS

The following is added to **SECTION II – WHO IS AN INSURED**:

Any person or organization that you agree in a written contract or agreement to include as an additional insured on this Coverage Part is an insured, but only:

a. With respect to liability for "bodily injury" or "property damage" that occurs, or for "personal injury" caused by an offense that is committed, subsequent to the signing of that contract or agreement and while that part of the contract or agreement is in effect; and

b. If, and only to the extent that, such injury or damage is caused by acts or omissions of you or your subcontractor in the performance of "your work" to which the written contract or agreement applies. Such person or organization does not qualify as an additional insured with respect to the independent acts or omissions of such person or organization.

The insurance provided to such additional insured is subject to the following provisions:

a. If the Limits of Insurance of this Coverage Part shown in the Declarations exceed the minimum limits required by the written contract or agreement, the insurance provided to the additional insured will be limited to such minimum required limits. For the purposes of determining whether this limitation applies, the minimum limits required by the written contract or agreement will be considered to include the minimum limits of any Umbrella or Excess liability coverage required for the additional insured by that written contract or agreement. This provision will not increase the limits of insurance described in Section **III** – Limits Of Insurance.

b. The insurance provided to such additional insured does not apply to:

(1) Any "bodily injury", "property damage" or "personal injury" arising out of the providing, or failure to provide, any professional architectural, engineering or surveying services, including:

(a) The preparing, approving, or failing to prepare or approve, maps, shop drawings, opinions, reports, surveys, field orders or change orders, or the preparing, approving, or failing to prepare or approve, drawings and specifications; and

(b) Supervisory, inspection, architectural or engineering activities.

(2) Any "bodily injury" or "property damage" caused by "your work" and included in the "products-completed operations hazard" unless the written contract or agreement specifically requires you to provide such coverage for that additional insured during the policy period.

c. The additional insured must comply with the following duties:

(1) Give us written notice as soon as practicable of an "occurrence" or an offense which may result in a claim. To the extent possible, such notice should include:

(a) How, when and where the "occurrence" or offense took place;

(b) The names and addresses of any injured persons and witnesses; and

(c) The nature and location of any injury or damage arising out of the "occurrence" or offense.

(2) If a claim is made or "suit" is brought against the additional insured:

© 2018 The Travelers Indemnity Company. All rights reserved.

(a) Immediately record the specifics of the claim or "suit" and the date received; and

(b) Notify us as soon as practicable and see to it that we receive written notice of the claim or "suit" as soon as practicable.

(3) Immediately send us copies of all legal papers received in connection with the claim or "suit", cooperate with us in the investigation or settlement of the claim or defense against the "suit", and otherwise comply with all policy conditions.

(4) Tender the defense and indemnity of any claim or "suit" to any provider of other insurance which would cover such additional insured for a loss we cover. However, this condition does not affect whether the insurance provided to such additional insured is primary to other insurance available to such additional insured which covers that person or organization as a named insured as described in Paragraph **4.**, Other Insurance, of Section **IV** – Commercial General Liability Conditions.

© 2018 The Travelers Indemnity Company. All rights reserved.

THIS ENDORSEMENT CHANGES THE POLICY. PLEASE READ IT CAREFULLY.

BLANKET ADDITIONAL INSURED – AUTOMATIC STATUS IF REQUIRED BY WRITTEN CONTRACT (CONTRACTORS)

This endorsement modifies insurance provided under the following:

COMMERCIAL GENERAL LIABILITY COVERAGE PART

The following is added to **SECTION II – WHO IS AN INSURED**:

Any person or organization that:

a. You agree in a written contract or agreement to include as an additional insured on this Coverage Part; and

b. Has not been added as an additional insured for the same project by attachment of an endorsement under this Coverage Part which includes such person or organization in the endorsement's schedule;

is an insured, but:

a. Only with respect to liability for "bodily injury" or "property damage" that occurs, or for "personal injury" caused by an offense that is committed, subsequent to the signing of that contract or agreement and while that part of the contract or agreement is in effect; and

b. Only as described in Paragraph **(1)**, **(2)** or **(3)** below, whichever applies:

(1) If the written contract or agreement specifically requires you to provide additional insured coverage to that person or organization by the use of:

(a) The Additional Insured – Owners, Lessees or Contractors – (Form B) endorsement CG 20 10 11 85; or

(b) Either or both of the following: the Additional Insured – Owners, Lessees or Contractors – Scheduled Person Or Organization endorsement CG 20 10 10 01, or the Additional Insured – Owners, Lessees or Contractors – Completed Operations endorsement CG 20 37 10 01;

the person or organization is an additional insured only if the injury or damage arises out of "your work" to which the written contract or agreement applies;

(2) If the written contract or agreement specifically requires you to provide additional insured coverage to that person or organization by the use of:

(a) The Additional Insured – Owners, Lessees or Contractors – Scheduled Person or Organization endorsement CG 20 10 07 04 or CG 20 10 04 13, the Additional Insured – Owners, Lessees or Contractors – Completed Operations endorsement CG 20 37 07 04 or CG 20 37 04 13, or both of such endorsements with either of those edition dates; or

(b) Either or both of the following: the Additional Insured – Owners, Lessees or Contractors – Scheduled Person Or Organization endorsement CG 20 10, or the Additional Insured – Owners, Lessees or Contractors – Completed Operations endorsement CG 20 37, without an edition date of such endorsement specified;

the person or organization is an additional insured only if the injury or damage is caused, in whole or in part, by acts or omissions of you or your subcontractor in the performance of "your work" to which the written contract or agreement applies; or

(3) If neither Paragraph **(1)** nor **(2)** above applies:

(a) The person or organization is an additional insured only if, and to the extent that, the injury or damage is caused by acts or omissions of you or your subcontractor in the performance of "your work" to which the written contract or agreement applies; and

(b) Such person or organization does not qualify as an additional insured with respect to the independent acts or omissions of such person or organization.

The insurance provided to such additional insured is subject to the following provisions:

a. If the Limits of Insurance of this Coverage Part shown in the Declarations exceed the minimum limits required by the written contract or agreement, the insurance provided to the additional insured will be limited to such minimum required limits. For the purposes of determining whether

© 2017 The Travelers Indemnity Company. All rights reserved.

this limitation applies, the minimum limits required by the written contract or agreement will be considered to include the minimum limits of any Umbrella or Excess liability coverage required for the additional insured by that written contract or agreement. This provision will not increase the limits of insurance described in Section **III** – Limits Of Insurance.

b. The insurance provided to such additional insured does not apply to:

(1) Any "bodily injury", "property damage" or "personal injury" arising out of the providing, or failure to provide, any professional architectural, engineering or surveying services, including:

(a) The preparing, approving, or failing to prepare or approve, maps, shop drawings, opinions, reports, surveys, field orders or change orders, or the preparing, approving, or failing to prepare or approve, drawings and specifications; and

(b) Supervisory, inspection, architectural or engineering activities.

(2) Any "bodily injury" or "property damage" caused by "your work" and included in the "products-completed operations hazard" unless the written contract or agreement specifically requires you to provide such coverage for that additional insured during the policy period.

c. The additional insured must comply with the following duties:

(1) Give us written notice as soon as practicable of an "occurrence" or an offense which may result in a claim. To the extent possible, such notice should include:

(a) How, when and where the "occurrence" or offense took place;

(b) The names and addresses of any injured persons and witnesses; and

(c) The nature and location of any injury or damage arising out of the "occurrence" or offense.

(2) If a claim is made or "suit" is brought against the additional insured:

(a) Immediately record the specifics of the claim or "suit" and the date received; and

(b) Notify us as soon as practicable and see to it that we receive written notice of the claim or "suit" as soon as practicable.

(3) Immediately send us copies of all legal papers received in connection with the claim or "suit", cooperate with us in the investigation or settlement of the claim or defense against the "suit", and otherwise comply with all policy conditions.

(4) Tender the defense and indemnity of any claim or "suit" to any provider of other insurance which would cover such additional insured for a loss we cover. However, this condition does not affect whether the insurance provided to such additional insured is primary to other insurance available to such additional insured which covers that person or organization as a named insured as described in Paragraph **4.**, Other Insurance, of Section **IV** – Commercial General Liability Conditions.

© 2017 The Travelers Indemnity Company. All rights reserved.

THIS ENDORSEMENT CHANGES THE POLICY. PLEASE READ IT CAREFULLY.

BUSINESS AUTO EXTENSION ENDORSEMENT

This endorsement modifies insurance provided under the following:

BUSINESS AUTO COVERAGE FORM

With respect to coverage provided by this endorsement, the provisions of the Coverage Form apply unless modified by the endorsement.

GENERAL DESCRIPTION OF COVERAGE – This endorsement broadens coverage. However, coverage for any injury, damage or medical expenses described in any of the provisions of this endorsement may be excluded or limited by another endorsement to the Coverage Part, and these coverage broadening provisions do not apply to the extent that coverage is excluded or limited by such an endorsement. The following listing is a general coverage description only. Limitations and exclusions may apply to these coverages. Read all the provisions of this endorsement and the rest of your policy carefully to determine rights, duties, and what is and is not covered.

A. BROAD FORM NAMED INSURED

B. BLANKET ADDITIONAL INSURED

C. EMPLOYEE HIRED AUTO

D. EMPLOYEES AS INSURED

E. SUPPLEMENTARY PAYMENTS – INCREASED LIMITS

F. HIRED AUTO – LIMITED WORLDWIDE COVERAGE – INDEMNITY BASIS

G. WAIVER OF DEDUCTIBLE – GLASS

H. HIRED AUTO PHYSICAL DAMAGE – LOSS OF USE – INCREASED LIMIT

I. PHYSICAL DAMAGE – TRANSPORTATION EXPENSES – INCREASED LIMIT

J. PERSONAL EFFECTS

K. AIRBAGS

L. NOTICE AND KNOWLEDGE OF ACCIDENT OR LOSS

M. BLANKET WAIVER OF SUBROGATION

N. UNINTENTIONAL ERRORS OR OMISSIONS

PROVISIONS

A. BROAD FORM NAMED INSURED

The following is added to Paragraph **A.1.**, **Who Is An Insured**, of **SECTION II – LIABILITY COVERAGE**:

Any organization you newly acquire or form during the policy period over which you maintain 50% or more ownership interest and that is not separately insured for Business Auto Coverage. Coverage under this provision is afforded only until the 180th day after you acquire or form the organization or the end of the policy period, whichever is earlier.

B. BLANKET ADDITIONAL INSURED

The following is added to Paragraph **c.** in **A.1.**, **Who Is An Insured**, of **SECTION II – LIABILITY COVERAGE**:

This includes any person or organization who you are required under a written contract or agreement between you and that person or organization, that is signed by you before the "bodily injury" or "property damage" occurs and that is in effect during the policy period, to name as an additional insured for Liability Coverage, but only for damages to which this insurance applies and only to the extent of that person's or organization's liability for the conduct of another "insured".

C. EMPLOYEE HIRED AUTO

1. The following is added to Paragraph **A.1.**, **Who Is An Insured**, of **SECTION II – LIABILITY COVERAGE**:

An "employee" of yours is an "insured" while operating an "auto" hired or rented under a contract or agreement in that "employee's" name, with your permission, while performing duties related to the conduct of your business.

2. The following replaces Paragraph **b.** in **B.5.**, **Other Insurance**, of **SECTION IV – BUSINESS AUTO CONDITIONS**:

b. For Hired Auto Physical Damage Coverage, the following are deemed to be covered "autos" you own:

© 2016 The Travelers Indemnity Company. All rights reserved.
Includes copyrighted material of Insurance Services Office, Inc. with its permission

(1) Any covered "auto" you lease, hire, rent or borrow; and

(2) Any covered "auto" hired or rented by your "employee" under a contract in that individual "employee's" name, with your permission, while performing duties related to the conduct of your business.

However, any "auto" that is leased, hired, rented or borrowed with a driver is not a covered "auto".

D. EMPLOYEES AS INSURED

The following is added to Paragraph **A.1.**, **Who Is An Insured**, of **SECTION II – LIABILITY COVERAGE**:

Any "employee" of yours is an "insured" while using a covered "auto" you don't own, hire or borrow in your business or your personal affairs.

E. SUPPLEMENTARY PAYMENTS – INCREASED LIMITS

1. The following replaces Paragraph **A.2.a.(2)**, of **SECTION II – LIABILITY COVERAGE**:

(2) Up to $3,000 for cost of bail bonds (including bonds for related traffic law violations) required because of an "accident" we cover. We do not have to furnish these bonds.

2. The following replaces Paragraph **A.2.a.(4)**, of **SECTION II – LIABILITY COVERAGE**:

(4) All reasonable expenses incurred by the "insured" at our request, including actual loss of earnings up to $500 a day because of time off from work.

F. HIRED AUTO – LIMITED WORLDWIDE COVERAGE – INDEMNITY BASIS

The following replaces Subparagraph **e.** in Paragraph **B.7.**, **Policy Term, Coverage Territory**, of **SECTION IV – BUSINESS AUTO CONDITIONS**:

e. Anywhere in the world, except any country or jurisdiction while any trade sanction, embargo, or similar regulation imposed by the United States of America applies to and prohibits the transaction of business with or within such country or jurisdiction, for Liability Coverage for any covered "auto" that you lease, hire, rent or borrow without a driver for a period of 30 days or less and that is not an "auto" you lease, hire, rent or borrow from any of your "employees", partners (if you are a partnership), members (if you are a limited liability company) or members of their households.

(1) With respect to any claim made or "suit" brought outside the United States of America, the territories and possessions of the United States of America, Puerto Rico and Canada:

(a) You must arrange to defend the "insured" against, and investigate or settle any such claim or "suit" and keep us advised of all proceedings and actions.

(b) Neither you nor any other involved "insured" will make any settlement without our consent.

(c) We may, at our discretion, participate in defending the "insured" against, or in the settlement of, any claim or "suit".

(d) We will reimburse the "insured":

(i) For sums that the "insured" legally must pay as damages because of "bodily injury" or "property damage" to which this insurance applies, that the "insured" pays with our consent, but only up to the limit described in Paragraph **C.**, Limit Of Insurance, of SECTION **II** – LIABILITY COVERAGE;

(ii) For the reasonable expenses incurred with our consent for your investigation of such claims and your defense of the "insured" against any such "suit", but only up to and included within the limit described in Paragraph **C.**, Limit Of Insurance, of SECTION **II** – LIABILITY COVERAGE, and not in addition to such limit. Our duty to make such payments ends when we have used up the applicable limit of insurance in payments for damages, settlements or defense expenses.

(2) This insurance is excess over any valid and collectible other insurance available to the "insured" whether primary, excess contingent or on any other basis.

(3) This insurance is not a substitute for required or compulsory insurance in any country outside the United States, its

© 2016 The Travelers Indemnity Company. All rights reserved.
Includes copyrighted material of Insurance Services Office, Inc. with its permission

territories and possessions, Puerto Rico and Canada.

You agree to maintain all required or compulsory insurance in any such country up to the minimum limits required by local law. Your failure to comply with compulsory insurance requirements will not invalidate the coverage afforded by this policy, but we will only be liable to the same extent we would have been liable had you complied with the compulsory insurance requirements.

(4) It is understood that we are not an admitted or authorized insurer outside the United States of America, its territories and possessions, Puerto Rico and Canada. We assume no responsibility for the furnishing of certificates of insurance, or for compliance in any way with the laws of other countries relating to insurance.

G. WAIVER OF DEDUCTIBLE – GLASS

The following is added to Paragraph **D.**, **Deductible**, of **SECTION III – PHYSICAL DAMAGE COVERAGE**:

No deductible for a covered "auto" will apply to glass damage if the glass is repaired rather than replaced.

H. HIRED AUTO PHYSICAL DAMAGE – LOSS OF USE – INCREASED LIMIT

The following replaces the last sentence of Paragraph **A.4.b.**, **Loss Of Use Expenses**, of **SECTION III – PHYSICAL DAMAGE COVERAGE**:

However, the most we will pay for any expenses for loss of use is $65 per day, to a maximum of $750 for any one "accident".

I. PHYSICAL DAMAGE – TRANSPORTATION EXPENSES – INCREASED LIMIT

The following replaces the first sentence in Paragraph **A.4.a.**, **Transportation Expenses**, of **SECTION III – PHYSICAL DAMAGE COVERAGE**:

We will pay up to $50 per day to a maximum of $1,500 for temporary transportation expense incurred by you because of the total theft of a covered "auto" of the private passenger type.

J. PERSONAL EFFECTS

The following is added to Paragraph **A.4.**, **Coverage Extensions**, of **SECTION III – PHYSICAL DAMAGE COVERAGE**:

Personal Effects

We will pay up to $400 for "loss" to wearing apparel and other personal effects which are:

(1) Owned by an "insured"; and

(2) In or on your covered "auto".

This coverage applies only in the event of a total theft of your covered "auto".

No deductibles apply to this Personal Effects coverage.

K. AIRBAGS

The following is added to Paragraph **B.3.**, **Exclusions**, of **SECTION III – PHYSICAL DAMAGE COVERAGE**:

Exclusion **3.a.** does not apply to "loss" to one or more airbags in a covered "auto" you own that inflate due to a cause other than a cause of "loss" set forth in Paragraphs **A.1.b.** and **A.1.c.**, but only:

a. If that "auto" is a covered "auto" for Comprehensive Coverage under this policy;

b. The airbags are not covered under any warranty; and

c. The airbags were not intentionally inflated.

We will pay up to a maximum of $1,000 for any one "loss".

L. NOTICE AND KNOWLEDGE OF ACCIDENT OR LOSS

The following is added to Paragraph **A.2.a.**, of **SECTION IV – BUSINESS AUTO CONDITIONS**:

Your duty to give us or our authorized representative prompt notice of the "accident" or "loss" applies only when the "accident" or "loss" is known to:

(a) You (if you are an individual);

(b) A partner (if you are a partnership);

(c) A member (if you are a limited liability company);

(d) An executive officer, director or insurance manager (if you are a corporation or other organization); or

(e) Any "employee" authorized by you to give notice of the "accident" or "loss".

M. BLANKET WAIVER OF SUBROGATION

The following replaces Paragraph **A.5.**, **Transfer Of Rights Of Recovery Against Others To Us**, of **SECTION IV – BUSINESS AUTO CONDITIONS**:

© 2016 The Travelers Indemnity Company. All rights reserved.
Includes copyrighted material of Insurance Services Office, Inc. with its permission

5. Transfer Of Rights Of Recovery Against Others To Us

We waive any right of recovery we may have against any person or organization to the extent required of you by a written contract signed and executed prior to any "accident" or "loss", provided that the "accident" or "loss" arises out of operations contemplated by such contract. The waiver applies only to the person or organization designated in such contract.

N. UNINTENTIONAL ERRORS OR OMISSIONS

The following is added to Paragraph **B.2.**, **Concealment, Misrepresentation, Or Fraud**, of **SECTION IV – BUSINESS AUTO CONDITIONS**:

The unintentional omission of, or unintentional error in, any information given by you shall not prejudice your rights under this insurance. However this provision does not affect our right to collect additional premium or exercise our right of cancellation or non-renewal.

© 2016 The Travelers Indemnity Company. All rights reserved.
Includes copyrighted material of Insurance Services Office, Inc. with its permission

THIS ENDORSEMENT CHANGES THE POLICY. PLEASE READ IT CAREFULLY.

BLANKET ADDITIONAL INSURED – PRIMARY AND NON-CONTRIBUTORY WITH OTHER INSURANCE

This endorsement modifies insurance provided under the following:

BUSINESS AUTO COVERAGE FORM

PROVISIONS

1. The following is added to Paragraph **A.1.c.**, **Who Is An Insured**, of **SECTION II – LIABILITY COVERAGE**:

   This includes any person or organization who you are required under a written contract or agreement between you and that person or organization, that is signed by you before the "bodily injury" or "property damage" occurs and that is in effect during the policy period, to name as an additional insured for Liability Coverage, but only for damages to which this insurance applies and only to the extent of that person's or organization's liability for the conduct of another "insured".

2. The following is added to Paragraph **B.5.**, **Other Insurance** of **SECTION IV – BUSINESS AUTO CONDITIONS**:

   Regardless of the provisions of paragraph **a.** and paragraph **d.** of this part **5. Other Insurance,** this insurance is primary to and non-contributory with applicable other insurance under which an additional insured person or organization is the first named insured when the written contract or agreement between you and that person or organization, that is signed by you before the "bodily injury" or "property damage" occurs and that is in effect during the policy period, requires this insurance to be primary and non-contributory.

© 2016 The Travelers Indemnity Company. All rights reserved.
Includes copyrighted material of Insurance Services Office, Inc. with its permission.

WORKERS COMPENSATION AND EMPLOYERS LIABILITY POLICY ENDORSEMENT WC 42 03 04 (B)

POLICY NUMBER:

TEXAS WAIVER OF OUR RIGHT TO RECOVER FROM OTHERS ENDORSEMENT

This endorsement applies only to the insurance provided by the policy because Texas is shown in Item 3.A. of the Information Page.

We have the right to recover our payments from anyone liable for an injury covered by this policy. We will not enforce our right against the person or organization named in the Schedule, but this waiver applies only with respect to bodily injury arising out of the operations described in the Schedule where you are required by a written contract to obtain this waiver from us.

This endorsement shall not operate directly or indirectly to benefit anyone not named in the Schedule.

The premium for this endorsement is shown in the Schedule.

Schedule

1. ☐ Specific Waiver

Name of person or organization

☐ Blanket Waiver

Any person or organization for whom the Named Insured has agreed by written contract to furnish this waiver.

2. Operations:

3. Premium:

The premium charge for this endorsement shall be _____ percent of the premium developed on payroll in connection with work performed for the above person(s) or organization(s) arising out of the operations described.

4. Advance Premium:

This endorsement changes the policy to which it is attached and is effective on the date issued unless otherwise stated.

(The information below is required only when this endorsement is issued subsequent to preparation of the policy.)

Endorsement Effective Policy No. Endorsement No.
Insured Premium

Insurance Company Countersigned by _____

DATE OF ISSUE: ST ASSIGN:

© Copyright 2014 National Council on Compensation Insurance, Inc. All Rights Reserved.

TRAVELERS

WORKERS COMPENSATION
AND
EMPLOYERS LIABILITY POLICY

ENDORSEMENT WC 99 03 76 (A) –
Policy Number: UB-7S899313-25-43-G
Effective Dates: 11/30/2025 -11/30/2026

WAIVER OF OUR RIGHT TO RECOVER FROM OTHERS ENDORSEMENT – CALIFORNIA (BLANKET WAIVER)

We have the right to recover our payments from anyone liable for an injury covered by this policy. We will not enforce our right against the person or organization named in the Schedule.

The additional premium for this endorsement shall be % of the California workers' compensation premium.

Schedule

Person or Organization	**Job Description**
As Required by Written Contract or Agreement	

This endorsement changes the policy to which it is attached and is effective on the date issued unless otherwise stated.

(The information below is required only when this endorsement is issued subsequent to preparation of the policy.)

Endorsement Effective Policy No. Endorsement No.
Insured Premium

Insurance Company Countersigned by _____

DATE OF ISSUE: - - ST ASSIGN:

TRAVELERS

WORKERS COMPENSATION
AND
EMPLOYERS LIABILITY POLICY

ENDORSEMENT WC 00 03 13 (00) -

Policy Number: UB-7S899313-25-43-G
Effective Dates: 11/30/2025 -11/30/2026

WAIVER OF OUR RIGHT TO RECOVER FROM OTHERS ENDORSEMENT

We have the right to recover our payments from anyone liable for an injury covered by this policy. We will not enforce our right against the person or organization named in the Schedule. (This agreement applies only to the extent that you perform work under a written contract that requires you to obtain this agreement from us.)

This agreement shall not operate directly or indirectly to benefit any one not named in the Schedule.

SCHEDULE

DESIGNATED PERSON:

As Required by Written Contract or Agreement

DESIGNATED ORGANIZATION:

DATE OF ISSUE: - - ST ASSIGN:

Washington State Department of Revenue

Business Lookup

License Information:

New search Back to results

Entity name: COFFMAN ENGINEERS, INC.

Business name: COFFMAN ENGINEERS, INC.

Entity type: Profit Corporation

UBI #: 600-310-893

Business ID: 001

Location ID: 0002

Location: Active

Location address:
221 N WALL ST
STE 500
SPOKANE WA 99201-0824

Mailing address:
1101 2ND AVE
STE 400
SEATTLE WA 98101-2923

Excise tax and reseller permit status: Click here

Secretary of State information: Click here

Endorsements

Endorsements held at this lo	License #	Count	Details	Status	Expiration da	First issuance
Spokane General Business	T12020042BL			Active	Feb-28-2027	Oct-15-2012

Owners and officers on file with the Department of Revenue

Owners and officers	Title
RUFF, DAVID	Chairman of the Board, Director, CEO

View Additional Locations

The Business Lookup information is updated nightly. Search date and time: 8/10/2026 12:06:22 PM

Contact us

How are we doing?
Take our survey!

Don't see what you expected?
Check if your browser is supported

Agenda Sheet for City Council:

Committee: PIES **Date:** 10/13/2026

Committee Agenda type: Reports, Contracts & Claims

Council Meeting Date: 12/02/2026

Date Rec'd	10/5/2026
Clerk's File #	OPR 2024-0436
Cross Ref #	
Project #	
Bid #	
Requisition #	

Submitting Dept	INTEGRATED CAPITAL
Contact Name/Phone	NATE SULYA 6988
Contact E-Mail	NSULYA@SPOKANECITY.ORG
Agenda Item Type	Engineer Construction Contract
Council Sponsor(s)	KKLITZKE
Sponsoring at Administrators Request	NO
Lease? NO	**Grant Related?** NO **Public Works?** NO
Agenda Item Name	CONTRACT AMENDMENT FOR UTILITY PIPE REHAB PROGRAM

Agenda Wording

Amendment to agreement with Spokane Neighborhood Action Partners (SNAP) to continue providing administration of the Utility Pipe Rehab Program through 12/31/2027.

Summary (Background)

In 2023, Council approved creation of the Utility Pipe Rehab Program (formerly called the Water and Sewer Rehabilitation Program) to provide financial assistance to qualified residents in need of water or sewer system rehabilitation. SNAP was selected to administer the program via request for proposal. This is the second of four amendments. Costs are the same as outlined in the original agreement. Funding comes from water and sewer utility rates; any program funding from the previous year is rolled over to the following year.

What impacts would the proposal have on historically excluded communities?

Public works services and projects are designed to serve all citizens and businesses. We strive to offer a consistent level of service to all, distribute public investment throughout the community, and respond to gaps in services identified in various City plans.

How will data be collected, analyzed, and reported concerning the effect of the program/policy by racial, ethnic, gender identity, national origin, income level, disability, sexual orientation, or other existing disparities?

n/a

How will data be collected regarding the effectiveness of this program, policy, or product to ensure it is the right solution?

Public Works follows the City's established procurement and public works bidding regulations and policies to bring items forward and then uses contract management best practices to ensure desired outcomes and regulatory compliance.

Describe how this proposal aligns with current City Policies, including the Comprehensive Plan, Sustainability Action Plan, Capital Improvement Program, Neighborhood Master Plans, Council Resolutions, and others?

This work is consistent with annual budget strategies to limit costs and approved projects in the 6-year CIP.

Council Subcommittee Review

n/a

Fiscal Impact

Approved in Current Year Budget?	YES
Total Cost	$ 500,000
Current Year Cost	$ 500,000
Subsequent Year(s) Cost	$

Narrative

Funding comes from water and sewer utility rates; any program funding from the previous year is rolled over to the following year.

Amount		Budget Account
Expense	$ 250000	# 4250-30210-38141-54201-99999
Expense	$ 250000	# 4100-30210-34141-54201-99999
Select	$	#
Select	$	#
Select	$	#
Select	$	#

Funding Source	One-Time
Funding Source Type	Program Revenue

Is this funding source sustainable for future years, months, etc?

Yes – funding comes from utility rates.

Expense Occurrence	

Other budget impacts (revenue generating, match requirements, etc.)

n/a

Approvals		Additional Approvals	
Dept Head	PICANCO, KEVIN		
Division Director	FEIST, MARLENE		
Accounting Manager	ALBIN-MOORE, ANGELA		
Legal	FAIRBORN, KATHERINE		
For the Mayor	PICCOLO, MIKE		

Distribution List

Amber Johnson | Amber.j@snapwa.org	icmworksaccounting@spokanecity.org
tax&licenses@spokanecity.org	kpicanco@spokanecity.org
nsulya@spokanecity.org	eraea@spokanecity.org

City Clerk's No. OPR 2024-0436

City of Spokane

CONTRACT RENEWAL #2 of 4

Title: UTILITY PIPE REHAB PROGRAM Formerly known as - WATER AND SEWER REHABILITATION PROGRAM

THIS CONTRACT RENEWAL is made and entered into by and between the **City of Spokane,** a Washington municipal corporation ("City"), and **Spokane Neighborhood Action Partners,** whose address is 3102 West Whistalks Way, Spokane, Washington 9924, as ("Company"), individually hereafter referenced as a "Party", and together as the "Parties".

WHEREAS, the Parties entered into a Contract wherein the Company agreed to perform the Administration of the Water and Sewer Rehabilitation Program; and

WHEREAS, the original Contract provided for four (4) additional one (1) year renewals, with this being the second of those renewals, therefore the original Contract needs to be formally renewed by this written Contract Renewal document.

NOW, THEREFORE, in consideration of these terms, the Parties mutually agree as follows:

1. CONTRACT DOCUMENTS.
The original Contract, dated June 18, 2024, any previous amendments, renewals and / or extensions / thereto, are incorporated by reference into this document as though written in full and shall remain in full force and effect except as provided herein.

2. EFFECTIVE DATE.
This Contract Renewal shall become effective on January 1, 2027, and shall end December 31, 2027.

3. COMPENSATION.
The City shall pay an estimated maximum annual cost not to exceed **FIVE HUNDRED THOUSAND AND 00/100 DOLLARS ($500,000.00)** plus tax if applicable, for everything furnished and done under this Contract Renewal. This is the maximum amount to be paid under this Renewal, and shall not be exceeded without the prior written authorization of the City, memorialized with the same formality as the original Contract and this Renewal document.

4. DEBARMENT AND SUSPENSION.
The Company has provided its certification that it is in compliance with and shall not contract with individuals or organizations which are debarred, suspended, or otherwise excluded from or

ineligible from participation in Federal Assistance Programs under Executive Order 12549 and "Debarment and Suspension", codified at 29 CFR part 98.

IN WITNESS WHEREOF, in consideration of the terms, conditions and covenants contained, or attached and incorporated and made a part, the Parties have executed this Contract Renewal by having legally-binding representatives affix their signatures below.

SPOKANE NEIGHBORHOOD ACTION PARTNERS (SNAP)

By_____
Signature Date

_____
Type or Print Name

_____
Title

Attest:

_____
City Clerk

CITY OF SPOKANE

By_____
Signature Date

_____
Type or Print Name

_____
Title

Approved as to form:

_____
Assistant City Attorney

Attachments that are part of this Agreement:

Certificate of Debarment

26-276a

ATTACHMENT A

CERTIFICATION REGARDING DEBARMENT, SUSPENSION, INELIGIBILITY AND VOLUNTARY EXCLUSION

1. The undersigned (i.e., signatory for the Subrecipient / Contractor / Consultant) certifies, to the best of its knowledge and belief, that it and its principals:

   a. Are not presently debarred, suspended, proposed for debarment, declared ineligible, or voluntarily excluded from covered transactions by any federal department or agency;
   b. Have not within a three-year period preceding this contract been convicted or had a civil judgment rendered against them for commission of fraud or a criminal offense in connection with obtaining, attempting to obtain, or performing a public (federal, state, or local) transaction or contract under a public transaction; violation of federal or state antitrust statutes or commission of embezzlement, theft, forgery, bribery, falsification or destruction of records, making false statements, tax evasion, receiving stolen property, making false claims, or obstruction of justice;
   c. Are not presently indicted or otherwise criminally or civilly charged by a government entity (federal, state, or local) with commission of any of the offenses enumerated in paragraph (1)(b) of this certification; and,
   d. Have not within a three-year period preceding this contract had one or more public transactions (federal, state, or local) terminated for cause or default.

2. The undersigned agrees by signing this contract that it shall not knowingly enter into any lower tier covered transaction with a person who is debarred, suspended, declared ineligible, or voluntarily excluded from participation in this covered transaction.

3. The undersigned further agrees by signing this contract that it will include the following clause, without modification, in all lower tier covered transactions and in all solicitations for lower tier covered transactions:

   Certification Regarding Debarment, Suspension, Ineligibility and Voluntary Exclusion – Lower Tier Covered Transactions

   1. The lower tier contractor certified, by signing this contract that neither it nor its principals is presently debarred, suspended, proposed for debarment, declared ineligible, or voluntarily excluded from participation in this transaction by any federal department or agency.

   2. Where the lower tier contractor is unable to certify to any of the statements in this contract, such contractor shall attach an explanation to this contract.

4. I understand that a false statement of this certification may be grounds for termination of the contract.

Name of Subrecipient / Contractor / Consultant (Type or Print)	Program Title (Type or Print)
Name of Certifying Official (Type or Print) Title of Certifying Official (Type or Print)	Signature Date (Type or Print)

Issue Date 8/5/2026 Cert #:0000025209

NON PROFIT INSURANCE PROGRAM

CERTIFICATE OF COVERAGE

THIS CERTIFICATE IS ISSUED AS A MATTER OF INFORMATION ONLY AND CONFERS NO RIGHTS UPON THE CERTIFICATE HOLDER. THIS CERTIFICATE DOES NOT AMEND, EXTEND OR ALTER THE COVERAGE AFFORDED BY THE NPIP COVERAGE AGREEMENT BELOW. THIS CERTIFICATE OF COVERAGE DOES NOT CONSTITUTE A CONTRACT BETWEEN THE ISSUING INSURER(S), AUTHORIZED REPRESENTATIVE OR PRODUCER, AND THE CERTIFICATE HOLDER.

IMPORTANT: IF THE CERTIFICATE HOLDER IS AN ADDITIONAL COVERED PARTY, THE COVERAGE AGREEMENT MUST BE ENDORSED. IF SUBROGATION IS WAIVED, SUBJECT TO THE TERMS AND CONDITIONS OF THE COVERAGE AGREEMENT, CERTAIN COVERAGE MAY REQUIRE AN ENDORSEMENT. A STATEMENT ON THIS CERTIFICATE DOES NOT CONFER RIGHTS TO THE CERTIFICATE HOLDER IN LIEU OF SUCH ENDORSEMENT(S).

PROGRAM ADMINISTRATOR

Clear Risk Solutions
159 Basin Street SW PMB #206
Ephrata, WA 98823

COVERED PARTY

Spokane Neighborhood Action Partners
SNAP Financial Access
3102 West Whistalks Wy
Spokane, WA 99224

COMPANIES AFFORDING COVERAGE

GENERAL LIABILITY:	**NPIP / Munich Re. et al.**
AUTOMOBILE LIABILITY	**NPIP / Munich Re. et al.**
PROPERTY	**NPIP / Munich Re. et al.**
CRIME	**NPIP / Munich Re. et al.**
WRONGFUL ACT LIABILITY	**NPIP / Munich Re. et al.**
MISCELLANEOUS PROFESSIONAL LIABILITY	**NPIP / Munich Re. et al.**

COVERAGES

THIS IS TO CERTIFY THAT THE COVERAGES LISTED BELOW HAVE BEEN ISSUED TO THE COVERED MEMBER NAMED ABOVE FOR THE COVERAGE PERIOD INDICATED, NOT WITHSTANDING ANY REQUIREMENT, TERM OR CONDITION OF CONTRACT OR OTHER DOCUMENT WITH RESPECT TO WHICH THIS CERTIFICATE MAY BE ISSUED OR MAY PERTAIN. THE COVERAGE AFFORDED BY THE NPIP COVERAGE AGREEMENT DESCRIBED HEREIN IS SUBJECT TO ALL THE TERMS, EXCLUSIONS, AND CONDITIONS OF SUCH COVERAGE AGREEMENT. LIMITS SHOWN BELOW MAY HAVE BEEN REDUCED BY PAID CLAIMS.

LINE OF COVERAGE	COVERAGE NUMBER	EFF DATE	EXP DATE	DESCRIPTION	LIMITS
GENERAL LIABILITY					
COMMERCIAL GENERAL LIABILITY (OCCURRENCE FORM)	**NPIP262733675**	**6/1/2026**	**6/1/2027**	PER OCCURRENCE	$5,000,000
INCLUDES STOP GAP – EMPLOYERS LIABILITY				PER MEMBER AGGREGATE	$10,000,000
				PRODUCT-COMP/OP	$5,000,000
MEMBER DEDUCTIBLE: $5,000				PERSONAL & ADV. INJURY	$5,000,000
(LIABILITY IS SUBJECT TO A $500,000 SIR PAYABLE FROM PROGRAM FUNDS)				ANNUAL POOL AGGREGATE	$50,000,000
AUTOMOBILE LIABILITY					
COMMERCIAL AUTOMOBILE LIAB. (ANY AUTO)	**NPIP262733675**	**6/1/2026**	**6/1/2027**	COMBINED SINGLE LIMIT	$5,000,000
(LIABILITY IS SUBJECT TO A $500,000 SIR PAYABLE FROM PROGRAM FUNDS)				ANNUAL POOL AGGREGATE	NONE
PROPERTY					
COMMERCIAL PROPERTY	**NPIP262733675**	**6/1/2026**	**6/1/2027**	ALL RISK PER OCC EXCL EQ & FL	$150,000,000
				*BLANKET LIMIT (IF APPLICABLE)	N/A
*BLANKET LIMIT, IF SHOWN, IS APPLICABLE TO ALL LOCATIONS STATED AS BLANKET LIMIT ON THE STATEMENT OF VALUES ON FILE WITH THE COMPANY.				EARTHQUAKE PER OCC	Excluded
EQ AND FLOOD COVERAGE MAY BE EXCLUDED FOR INDIVIDUAL LOCATIONS				FLOOD PER OCC	Excluded
(PROPERTY IS SUBJECT TO A $500,000 SIR PAYABLE FROM PROGRAM FUNDS)				ANNUAL POOL AGGREGATE	NONE
CRIME					
COMMERCIAL CRIME	**NPIP262733675**	**6/1/2026**	**6/1/2027**	PER OCCURRENCE	Excluded
INCLUDES EMPLOYEE THEFT/DISHONESTY & ERISA COVERAGE				PER MEMBER AGGREGATE	Excluded
MEMBER DEDUCTIBLE: Excluded					
(CRIME IS SUBJECT TO A $500,000 SIR PAYABLE FROM PROGRAM FUNDS)				ANNUAL POOL AGGREGATE	$5,000,000
WRONGFUL ACT LIABILITY (INCLUDES E&O / D&O)					
WRONGFUL ACT LIABILTIY (CLAIMS MADE)	**NPIP262733675**	**6/1/2026**	**6/1/2027**	PER CLAIM	$5,000,000
MEMBER DEDUCTIBLE: $5,000				PER MEMBER AGGREGATE	$5,000,000
(LIABILITY IS SUBJECT TO A $500,000 SIR PAYABLE FROM PROGRAM FUNDS)				ANNUAL POOL AGGREGATE	$40,000,000
MISCELLANEOUS PROFESSIONAL LIABILITY					
MISC. PROFESSIONAL LIABILITY (CLAIMS MADE)	**NPIP262733675**	**6/1/2026**	**6/1/2027**	PER CLAIM	$5,000,000
				PER MEMBER AGGREGATE	$5,000,000
MEMBER DEDUCTIBLE: $2,500					
(LIABILITY IS SUBJECT TO A $500,000 SIR PAYABLE FROM PROGRAM FUNDS)				ANNUAL POOL AGGREGATE	$40,000,000

CANCELLATION NOTICE: SHOULD ANY OF THE ABOVE-DESCRIBED COVERAGES BE CANCELLED BEFORE THE EXPIRATION DATE THEREOF, NOTICE WILL BE DELIVERED IN ACCORDANCE WITH THE NPIP COVERAGE AGREEMENT PROVISIONS.

Issue Date 8/5/2026 **Cert #:0000025209**

DESCRIPTION OF OPERATIONS / LOCATIONS / VEHICLES / SPECIAL ITEMS

Regarding various funding contracts with the City of Spokane. City of Spokane is named as an Additional Covered Party as respects General Liability regarding this funding only and is subject to coverage terms, conditions, and exclusions. Additional Covered Party endorsement is attached. Sexual Abuse and Molestation coverage is included in the General Liability Coverage Part with a limit of $2,000,000 limit per claim.

CERTIFICATE HOLDER	AUTHORIZED REPRESENTATIVE
City of Spokane 808 W Spokane Falls Blvd Spokane, WA 99201	

ADDITIONAL COVERED PARTY AMENDMENT – DESIGNATED PERSON OR ORGANIZATION

This endorsement modifies coverage provided under the following:

GENERAL LIABILITY COVERAGE PART

This endorsement changes the Coverage Agreement effective on the inception date of the Coverage Agreement unless another date is indicated above. Providing the certificate of coverage that this endorsement is attached to has been issued by and is on file with the Company, the following applies.

SCHEDULE

Person or Organization (Additional **Covered Party**):

City of Spokane
808 W Spokane Falls Blvd
Spokane, WA 99201

Description of Activities / Operations / Designated Premises:

Regarding various funding contracts with the City of Spokane. City of Spokane is named as an Additional Covered Party as respects General Liability regarding this funding only and is subject to coverage terms, conditions, and exclusions. Additional Covered Party endorsement is attached. Sexual Abuse and Molestation coverage is included in the General Liability Coverage Part with a limit of $2,000,000 limit per claim.

With respect to coverage under the General Liability Coverage Part (including Products/Completed Operations):

A. The Definition of **Covered Party** in the LIABILITY COVERAGES – COMMON CONDITIONS, DEFINITIONS AND EXCLUSIONS section of this Coverage Agreement is amended to add as a **Covered Party** the person or organization shown in the above Declarations with whom you have agreed in a written contract, written agreement, or permit that such person or organization be added as an additional **Covered Party** in your Coverage Agreement. Such person or organization is a **Covered Party** only with respect to their liability assumed by you that would be otherwise imposed by law in the absence of any contract, agreement, or permit relating to or arising out of the specified activity(ies) or operations described in the above Declarations.

However, this coverage only applies with respect to liability for **Bodily Injury, Property Damage, or Personal and Advertising Injury** caused, in whole or in part, by your acts or omissions or the acts or omissions of those acting on your behalf:

1. In performance of your ongoing operations; or
2. In connection with your premises owned or rented to you.

The following provisions also apply:

(1) The written contract, written agreement, or permit must be in effect at the inception of the **Coverage Period** or become effective during the **Coverage Period**; and
(2) The written contract, written agreement, or permit must be executed prior to the **Bodily Injury** or **Property Damage.**

Subject to the paragraphs above, any such person's or organization's status as an additional **Covered Party** ends when any of the following first occurs:

(1) This Coverage Agreement terminates;
(2) The written contract, written agreement, or permit terminates; or
(3) The specified activity(ies) or operations described in the above Declarations terminate.

B. The following is added to Condition D. Other Insurance in the LIABILITY COVERAGES – COMMON CONDITIONS, DEFINITIONS AND EXCLUSIONS section of the Coverage Agreement, and supersedes any provision to the contrary:

For the additional **Covered Party** under your Coverage Agreement shown in the above schedule, and subject to Paragraph A. above, this coverage is primary to and will not seek contribution from any other insurance available to such additional **Covered Party** provided that:

(1) The additional **Covered Party** is a Named Insured under such other insurance; and
(2) You have agreed in writing in a contract, agreement, or permit that this Coverage would be primary and would not seek contribution from any other insurance available to the additional **Covered Party** for amounts payable under the coverage provided by this endorsement.

C. The Limits of Coverage applicable to the additional **Covered Party** is the lesser of those limits specified in either the:

- Written contract, written agreement, or permit; or
- Declarations for this Coverage Agreement,

In no case will the limits of coverage provided under this General Liability endorsement exceed the limits as required in the contract or agreement, or the limit of liability available under this Coverage Agreement. These Limits of Coverage are part of and not in addition to the Limits of Coverage shown in the Declarations.

Except with respect to the Limits of Coverage, and any rights or duties specifically assigned in this Coverage Part to the **Covered Member**, this coverage applies:

a. As if each **Covered Member** were the only **Covered Member**; and
b. Separately to each **Covered Party** against whom claim is made or **Suit** is brought.

All other terms and conditions remain unchanged

Washington State Department of Revenue

Business Lookup

License Information:

New search Back to results

Entity name: SPOKANE NEIGHBORHOOD ACTION PARTNERS

Business name: SPOKANE NEIGHBORHOOD ACTION PARTNERS

Entity type: Nonprofit Corporation

UBI #: 600-615-613

Business ID: 001

Location ID: 0009

Location: Active

Location address: 212 W 2ND AVE
SPOKANE WA 99201-3606

Mailing address: 3102 W WHISTALKS WAY
SPOKANE WA 99224-5203

Excise tax and reseller permit status: Click here

Secretary of State information: Click here

Endorsements

Endorsements held at this location	License #	Count	Details	Status	Expiration date	First issuance dat

Endorsements held at this location	License #	Count	Details	Status	Expiration date	First issuance dat
Spokane Nonprofit Business				Active	Sep-30-2027	Dec-30-2013

Owners and officers on file with the Department of Revenue

Owners and officers	Title
DORWIN, MARCIA	Secretary
HONEKAMP, JULIE	
JOHNSON, AMBER	
PRITCHARD, SALLY	President

Registered Trade Names

Filter

Registered trade names	Status	First issued
SNAP	Active	Dec-04-1991
SPOKANE NEIGHBORHOOD ACTION PARTNERS	Active	Oct-02-2012
SPOKANE NEIGHBORHOOD ACTION PARTNERS - PACIFIC OFFICE	Active	Sep-06-2024
SPOKANE NEIGHBORHOOD ACTION PARTNERS 1203 W 5TH	Active	Jul-10-2019
SPOKANE NEIGHBORHOOD ACTION PARTNERS 705 W SECOND	Active	Sep-05-2018
SPOKANE NEIGHBORHOOD ACTION PROGRAMS	Active	Jun-17-1992

Registered trade names	Status	First issued
SPOKANE NEIGHBORHOOD ACTION PROGRAMS - ADMINISTRATION	Active	Jun-17-1992
SPOKANE NEIGHBORHOOD ACTION PROGRAMS - DOWNTOWN	Active	Jun-17-1992
SPOKANE NEIGHBORHOOD ACTION PROGRAMS - EAST	Active	Jun-17-1992
SPOKANE NEIGHBORHOOD ACTION PROGRAMS - HOMELESS	Active	Jun-17-1992
SPOKANE NEIGHBORHOOD ACTION PROGRAMS - NORTH COUNTY	Active	Jun-17-1992
SPOKANE NEIGHBORHOOD ACTION PROGRAMS - NORTHEAST	Active	Jun-17-1992
SPOKANE NEIGHBORHOOD ACTION PROGRAMS - VALLEY	Active	Jun-17-1992

View Additional Locations

The Business Lookup information is updated nightly. Search date and time: 10/7/2026 8:53:11 AM

Contact us

How are we doing?

Take our survey!

Don't see what you expected?

Check if your browser is supported

Agenda Sheet for City Council:

Committee: PIES **Date:** 11/10/2026

Committee Agenda type: Reports, Contracts & Claims

Council Meeting Date: 12/02/2026

Date Rec'd	10/30/2026		
Clerk's File #	OPR 2026-0932		
Cross Ref #			
Project #			
Submitting Dept	STREET	**Bid #**	RFQ 6625-26
Contact Name/Phone	CLINT HARRIS 625-7744	**Requisition #**	RE 21049
Contact E-Mail	CEHARRIS@SPOKANECITY.ORG		
Agenda Item Type	Purchase w/o Contract		
Council Sponsor(s)	BWILKERSON KKLITZKE		
Sponsoring at Administrators Request	NO		
Lease? NO	**Grant Related?** NO	**Public Works?** NO	
Agenda Item Name	PURCHASE OF WINTER MATERIAL STORAGE TANKS		

Agenda Wording

Seeking approval to purchase winter material storage tanks from Go To Tanks (Edmonds, WA) at a total cost not to exceed $160,000 plus applicable tax.

Summary (Background)

The Street Department is seeking to add additional storage space at the Street Departments Operations Complex for materials used during the winter months to maintain roads across the City. Storage at this location is more central within the City and will benefit Street Maintenance crews to add materials at this site. Bid RFQ 6625-26 was awarded to Go To Tanks as the lowest bidder that met all the bid requirements.

What impacts would the proposal have on historically excluded communities?

How will data be collected, analyzed, and reported concerning the effect of the program/policy by racial, ethnic, gender identity, national origin, income level, disability, sexual orientation, or other existing disparities?

How will data be collected regarding the effectiveness of this program, policy, or product to ensure it is the right solution?

Describe how this proposal aligns with current City Policies, including the Comprehensive Plan, Sustainability Action Plan, Capital Improvement Program, Neighborhood Master Plans, Council Resolutions, and others?

Council Subcommittee Review

Fiscal Impact	
Approved in Current Year Budget?	YES
Total Cost	**$** 160,000
Current Year Cost	**$**
Subsequent Year(s) Cost	**$**

Narrative

Amount		**Budget Account**
Expense	**$** 160,000	**#** 1100-21800-94420-56301-23022
Select	**$**	**#**
Select	**$**	**#**
Select	**$**	**#**
Select	**$**	**#**
Select	**$**	**#**

Funding Source

Funding Source Type Select

Is this funding source sustainable for future years, months, etc?

Expense Occurrence

Other budget impacts (revenue generating, match requirements, etc.)

Approvals		**Additional Approvals**	
Dept Head	HARRIS, CLINT E.	**PURCHASING**	PRINCE, THEA
Division Director	SNYDER, JON		
Accounting Manager	ZOLLINGER, NICHOLAS		
Legal	FAIRBORN, KATHERINE		
For the Mayor	PICCOLO, MIKE		

Distribution List

Tyna Russell Tyna@gototanks.com	ceharris@spokanecity.org
jwthomas@spokanecity.org	kaiumu@spokanecity.org
rrinderle@spokanecity.org	streetaccounting@spokanecity.org

CITY OF SPOKANE - Purchasing Nelson Center
9 15 N Nelson Street
SPOKANE, WA 99202
PHONE 509 625 6527

RFQ 6625-26 Vertical Polyethylene Storage Tank(s) 10,000 gallons or Larger Tank Sizes, Must Adhere to ASTM D1998 Specifications, Includes Delivery

VENDOR:		ABGroiups Inc					Acuantia, Inc					Ag Enterpise Supply					Go To Tanks					Technical International Inc				
ASTM D1998 Vertical Polyethylene Tank Size Meeting RFQ Specifications	Order Qty	Unit Price Per Tank Size Based On Order Qty	Extended Price Based on Order Qty	Est Freight Cost Based On Order Qty	Lead Time For Delivery after Receipt of Order	MRF & P/N	Unit Price Per Tank Size Based On Order Qty	Extended Price Based on Order Qty	Estimated Freight Cost Based On Order Qty	Lead Time For Delivery at COS WTEF after Receipt of Order	MRF & P/N	Unit Price Per Tank Size Based On Order Qty	Extended Price Based on Order Qty	Estimated Freight Cost Based On Order Qty	Lead Time For Delivery at COS WTEF after Receipt of Order	MRF & P/N	Unit Price Per Tank Size Based On Order Qty	Extended Price Based on Order Qty	Estimated Freight Cost Based On Order Qty	Lead Time For Delivery at COS WTEF after Receipt of Order	MRF & P/N	Unit Price Per Tank Size Based On Order Qty	Extended Price Based on Order Qty	Estimated Freight Cost Based On Order Qty	Lead Time For Delivery at COS WTEF after Receipt of Order	MRF & P/N
10,000 gal	1	$ 24,973.89	$ 24,973.89	Included	10 Days ARO	Norwesco 43128						$17,182.62	$17,182.62	$4,460.00	7 Weeks	Den Hartog VT10500-2800						$31,137	$31,137	included	19 Weeks ARO	Synder D5330300N43
10,000 gal	2	$	$	$								$17,182.62	$34,365.24	$4,460.00	7 Weeks							$27,600	$55,200	included	19 Weeks ARO	
10,000 gal	3	$	$	$								$17,182.62	$51,547.86	$4,460.00	7 Weeks							$27,208	$81,624	included	19 Weeks ARO	
10,000 gal	4	$	$	$								$17,182.62	$68,730.48	$8,920.00	7 Weeks							$27,600	$110,400	included	19 Weeks ARO	
10,000 gal	5	$	$	$								$17,182.62	$85,913.10	$8,920.00	7 Weeks							$26,983	$134,915	included	19 Weeks ARO	
10,000 gal	6	$	$	$								$14,727.96	$88,367.76	$8,920.00	7 Weeks							$26,421	$158,526	included	19 Weeks ARO	
10,500 gal	1						$23,177.86	$23,177.86	$6,240.00	7 - 8 Wks ARO	Synder Industries 1.5 SG Tank w/ (4) Sch. 80 PVC DBL Bolted Fittings, SxS, EPDM SII-5330300N43						$13,936	$13,936	$5,575	45 Days ARO	Den Hartog VT10500-2500					
10,500 gal	2						$22,866.62	$45,733.24	$6,240.00	7 - 8 Wks ARO							$13,179	$26,358	$5,575	45 Days ARO						
10,500 gal	3						$20,786.45	$62,359.35	$12,480.00	7 - 8 Wks ARO							$13,193	$39,579	$5,575	45 Days ARO						
10,500 gal	4						$19,762.73	$79,050.92	$12,480.00	7 - 8 Wks ARO							$13,379	$53,516	$11,150	45 Days ARO						
10,500 gal	5						$17,515.28	$87,576.40	$18,720.00	7 - 8 Wks ARO							$13,267	$66,335	$11,150	45 Days ARO						
10,500 gal	6						$15,689.14	$94,134.84	$18,720.00	7 - 8 Wks ARO							$13,193	$79,158	$11,150	45 Days ARO						
10,500 gal	1						$31,140.71	$31,140.71	$6,240.00	7 - 8 Wks ARO	Synder Industries 1.5 SG Tank w/ (4) Sch. 80 PVC DBL Bolted Fittings, SxS, EPDM SII-5330300N45																
10,500 gal	2						$30,717.32	$61,434.64	$6,240.00	7 - 8 Wks ARO																
10,500 gal	3						$27,887.57	$83,662.71	$12,480.00	7 - 8 Wks ARO																
10,500 gal	4						$26,494.97	$105,979.88	$12,480.00	7 - 8 Wks ARO																
10,500 gal	5						$23,437.66	$117,188.30	$18,720.00	7 - 8 Wks ARO																
10,500 gal	6						$20,953.47	$125,720.82	$18,720.00	7 - 8 Wks ARO																
12,500 gal	1						$30,159.29	$30,159.29	$8,800.00	7 - 8 Wks ARO	Synder Industries 1.5 SG Tank w/ (4) Sch. 80 PVC DBL Bolted Fittings, SxS, EPDM SII-5350000N43																
12,500 gal	2						$29,749.72	$59,499.44	$8,800.00	7 - 8 Wks ARO																
12,500 gal	3						$27,012.35	$81,037.05	$17,600.00	7 - 8 Wks ARO																
12,500 gal	4						$25,665.21	$102,660.84	$17,600.00	7 - 8 Wks ARO																
12,500 gal	5						$22,707.72	$113,538.60	$26,400.00	7 - 8 Wks ARO																
12,500 gal	6						$20,304.64	$121,827.84	$26,400.00	7 - 8 Wks ARO																
12,500 gal	1						$38,872.14	$38,872.14	$8,800.00	7 - 8 Wks ARO	Synder Industries 1.5 SG Tank w/ (4) Sch. 80 PVC DBL Bolted Fittings, SxS, EPDM SII-5350000N45																
12,500 gal	2						$38,339.86	$76,679.72	$8,800.00	7 - 8 Wks ARO																
12,500 gal	3						$34,782.31	$104,346.93	$17,600.00	7 - 8 Wks ARO																
12,500 gal	4						$33,031.54	$132,126.16	$17,600.00	7 - 8 Wks ARO																
12,500 gal	5						$29,187.91	$145,939.55	$26,400.00	7 - 8 Wks ARO																
12,500 gal	6						$26,064.81	$156,388.86	$26,400.00	7 - 8 Wks ARO																
15,000 gal	1						$37,560.00	$37,560.00	$8,800	7 - 8 Wks ARO	Synder Industries 1.5 SG Tank w/ (4) Sch. 80 PVC DBL Bolted Fittings, SxS, EPDM SII-5370000N43																
15,000 gal	2						$37,046.20	$74,092.40	$8,800	7 - 8 Wks ARO																
15,000 gal	3						$33,612.16	$100,836.48	$17,600	7 - 8 Wks ARO																
15,000 gal	4						$31,922.18	$127,688.72	$17,600	7 - 8 Wks ARO																
15,000 gal	5						$28,212.00	$141,060.00	$26,400	7 - 8 Wks ARO																
15,000 gal	6						$25,197.33	$151,183.98	$26,400	7 - 8 Wks ARO																
15,000 gal	1						$42,280.71	$42,280.71	$8,800	7 - 8 Wks ARO	Synder Industries 1.9 SG Tank w/ (4) Sch. 80 PVC DBL Bolted Fittings, SxS, EPDM SII-5370000N45																
15,000 gal	2						$41,700.42	$83,400.84	$8,800	7 - 8 Wks ARO																
15,000 gal	3						$37,822.01	$113,466.03	$17,600	7 - 8 Wks ARO																
15,000 gal	4						$35,913.33	$143,653.32	$17,600	7 - 8 Wks ARO																
15,000 gal	5						$31,723.03	$158,615.15	$26,400	7 - 8 Wks ARO																
15,000 gal	6						$28,318.25	$169,909.50	$26,400	7 - 8 Wks ARO																

Bid Response Summary

Bid Number	**RFQ 6625-26**
Bid Title	**Vertical Polyethylene Storage Tank(s) 10,000 Gallons or Larger Tank Sizes, Must Adhere to ASTM D1998 Specifications, Includes Delivery**
Bid Base Currency	**USD**
Due Date	**Friday, September 25, 2026 9:00:00 PM [(UTC-08:00) Pacific Time (US & Canada)]**
Bid Status	**Closed to Bidding**
Company	**Go To Tanks**
Submitted By	**Todd Broom - Friday, September 25, 2026 8:51:04 AM [(UTC-08:00) Pacific Time (US & Canada)]** **customerservice@gototanks.com 4257744155**
Comments	

Question Responses

Group	Reference Number	Question	Response
ADDENDA			
	1	ADDENDA. Indicated how many Addenda Contractor acknowledges receipt of.	All
BACKGROUND			
	#1	The City of Spokane Street Department, is initiating this request for quotes to solicit Bids from Vendors Vertical Polyethylene Tank(s) 10,000 Gallons or Larger Tank Sizes, Must Adhere to ASTM D-1998 Specifications, Includes Delivery	Acknowledge and Agree
	#1.1	Bidder are requested to provide unit pricing for tank(s) meeting stated specifications in sizes of 10,000 gallons, and larger tank sizes that bidder offers.	Acknowledge and Agree
	#1.1.1	Bidders are encouraged to provide tier-pricing should multiple quantities of a tank size be ordered.	Acknowledge and Agree
	#1.2	The City reserves the right to make multiple awards among vendors, selecting from quoted offerings that best meet the City’s needs, based on tank size offerings, unit pricing, and lead times.	Acknowledge and Understand
	#1.3	Acknowledge and Agree,Do Not Acknowledge and Do Not Agree	Acknowledge and Agree

	#2	Additional Purchases: The City of Spokane reserves the right to purchase additional items at the quoted price. Supplier agrees to sell at the same price, terms and conditions. 	Yes
INTERPRETATION			
	#1	If the Bidder discovers any errors, discrepancies or omissions in the quote specifications, or has any questions about the specifications, the Bidder must notify Purchasing in writing. Any addenda issued by the Purchaser will be incorporated into the resulting Purchase Order(s).	Acknowledge and Understand
WITHDRAWAL OF BIDS			
	#1	Bidders may withdrawal Quotes prior to the scheduled bid due date and time. Unless otherwise specified, no Quote may be withdrawn for a minimum of seventy-five (75) calendar days after the bid due date.	Acknowledge and Understand
EVALUATION OF BIDS			
	#1	Shall be based upon the following criteria, where applicable: A. The price, including sales tax and the effect of discounts. Price may be determined by life cycle costing or total cost quoting, when advantageous to the Purchaser. B. The quality of the items quoted, their conformity to specifications and the purpose for which they are required. C. The Bidder’s ability to provide prompt and efficient service and/or delivery. D. The character, integrity, reputation, judgment, experience and efficiency of the Bidder. E. The quality of performance of previous contracts or services. F. The previous and existing compliance by the Bidder with the laws relating to the contract or services. G. Uniformity or interchangeability. H. Any other information having a bearing on the decision to place order(s).	Understood and Agreed
BIDDING ERRORS			

	#1	Unit pricing will prevail in the circumstance of unit and extension pricing discrepancies. When, after the opening and tabulation of Bids, a Bidder claims error, and requests to be relieved of award, Bidder will be required to promptly present certified work sheets. The Purchaser will review the work sheets and if the Purchaser is convinced, by clear and convincing evidence, that an honest, mathematically excusable error or critical omission of costs has been made, the Bidder may be relieved of its Bid.	Understood and Agreed
REJECTION OF BIDS			
	#1	The City reserves the right to reject any or all Bids; to waive minor deviations from the specifications, to waive any informality in Bids received, whenever it is in the City's best interest, and to accept or reject all or part of this Bid at prices shown.	Understood and Agreed
AWARD(s)			
	#1	Any resulting Purchase(s), shall be awarded by City Council, to the Bidder whose Bid is the most favorable to the City, taking into consideration price and the other evaluation factors. INTERLOCAL AND STATE CONTRACTS WHERE APPLICABLE WILL BE CONSIDERED AS A BID. Unsuccessful Bidders will not automatically be notified of Bid results.	Understood and Agreed
MULTIPLE AWARDS			
	#1	The City reserves the right to make multiple awards among vendors, selecting from quoted offerings that best meet the City’s needs, based on tank size offerings, unit pricing, tier-pricing, and lead times.	Understood and Agreed
WARRANTY			
	#1	Successful Bidder(s) shall furnish standard warranty. State Warranty Here:	60 Months
TERMS AND CONDITIONS			

	#1	Bidder acknowledges that they have read and understand the Terms and Conditions Document in the "Documents" tab. If selected response is: "Do Not Acknowledge and Do Not Agree", include requested exception on separate page and title as "Exception to Terms and Conditions", and upload in response #1.1 below. The City will consider and determine if exception will be accepted.	Acknowledge and Agree
	#1.1	EXCEPTIONS: To Terms and Conditions, if you took exception above, upload here.	
	#2	ELIGIBILITY FOR CITY CONTRACTS: Section 18.09.050 of the Spokane Municipal Code states that the recipient of a City contract, award or purchase order shall certify that it is not knowingly or intentionally a nuclear weapons producer. The Bidder certifies that his/her firm is not a nuclear weapons producer.	I Certify
Polychlorinated Biphenyls (PCBs)			
	#1	In accordance with SMC 7.06.172(A), respondent certifies the products quoted and to be supplied (to include product packaging) do not contain polychlorinated biphenyls (PCBs). Moreover and consistent with SMC 7.06.172(B), the City of Spokane, at its sole discretion, may require (at no cost to the City) the apparent successful respondent to provide testing data (prior to contract execution or issue of purchase order) from an accredited laboratory or testing facility documenting the proposed products and or product packaging polychlorinated biphenyl levels.	Understood and Agreed
	#2	As far as you know, has this product type been tested for PCBs by a WA State accredited lab using EPA Method 1668c (or equivalent as updated)?	Yes
	#3	If so, were PCBs found at a measurable level?	No
	#4	As far as you know, has this actual product been tested for PCBs by a WA State accredited lab using EPA Method 1668 (or equivalent as updated)?	Yes
	#5	If so, note from whom the results can be obtained.	Manufacture Den Hartog industries

	#6	Do you have reason to believe the product contains measurable levels of PCBs?	No
	#7	Do you have reason to believe the product packaging contains measurable levels of PCBs?	No
BIDDER INFORMATION			
	#1	Please indicate the appropriate point of contact (including Name, Title, Phone Number, and Email) regarding this Bid and placement of orders if awarded. If these actions will not be managed by the same person, please explicitly specify all relevant contacts.	Tyna Russell, Manager, 425-774-4155, tyna@gototanks.com
ORGANIZATION			
	#1	Bidder Should Enter If Proposal Is of an Individual, Partnership, Corporation, and Existing Under The Laws of What US State. Enter Information Here:	Corporation State of WA
CITY OF SPOKANE BUSINESS REGISTRATION REQUIREMENT			

	#1	<p>BUSINESS REGISTRATION REQUIREMENT: Section 8.01.070 of the Spokane Municipal Code states that no person may engage in business with the City without first having obtained a valid annual business registration. The Bidder shall be responsible for contacting the State of Washington Business License Services at http://dor.wa.gov or 1-360-705-6741 to obtain a business license and City of Spokane endorsement. See Doing Business in Spokane - City of Spokane, Washington for additional resources. If the Bidder does not believe it is required to obtain a	Understood and Agreed

		business registration, complete the Business License Exemption Request Form (Rev Aug 2026), that can also be accessed via Doing Business in Spokane - City of Spokane, Washington, and submit to City Taxes & Licensing to request an exemption status determination.</p>	
	#2	City of Spokane Business Registration Number	State of WA
PROPRIETARY INFORMATION/PUBLIC DISCLOSURE			
	1	All materials submitted to the City in responses to this competitive procurement shall become the property of the City. All materials received by the City are public records and are subject to being released pursuant to a valid public records request. Washington state law mandates that all documents used, received, or produced by a governmental entity are presumptively public records, and there are few exemptions. Chapter 41.56 RCW. When responding to this competitive procurement, please consider that what you submit will be a public record. If you believe that some part of your response constitutes legally protected proprietary information, you MUST submit those portions of your response as a separate part of your response, and you MUST label it as “PROPRIETARY INFORMATION.” If a valid public records request is then received by the City for this information, you will be given notice and an opportunity to go to court to obtain an injunction to prevent the City from releasing this part of your response within 10 business days from the date of the notice. If no injunction is obtained, the City is legally required to release the records. The City will neither look for nor honor any claims of “proprietary information” that are not within the separate part of your response.	Understood and Agreed

MINORITY BUSINESS ENTERPRISE			
	#1	Bidder (is ___, is not ____) a Minority Business Enterprise. A Minority Business Enterprise is defined as a "business, privately or publicly owned, at least 51% of which is owned by minority group members. "For purpose of this definition, minority group members are Blacks, Hispanics, Asian Americans, American Indian or Alaskan Natives, or Women.	Is Not
SMALL BUSINESS			
	#1	Bidder (is ___, is not ___) a small business concern. (A small business concern for the purpose of government procurement is a concern, including its affiliates, which is independently owned and operated, is not dominant in the field of operations in which it is bidding on government contracts, and can further qualify under the criteria concerning number of employees, average annual receipts, or other criteria as prescribed by the Small Business Administration).	Is
NON-COLLUSION			
	#1	The Bidder certifies that his/her firm has not entered into any agreement of any nature whatsoever to fix, maintain, increase or reduce the prices or competition regarding the items covered by this Bid invitation	Certifies No Agreement Has Been Entered
ACCEPTANCE PERIOD			
	#1	Bids must provide seventy-five (75) days for acceptance by the City from the due date for receipt of Bids	Understood and Agreed
GENERAL INSTRUCTIONS			
	#1	The items to be furnished by the Vendor on this bid must be new and of the latest possible design and production.	Understood and Agreed
	#2	Time is of the essence in the performance of this contract after a delivery schedule is established.	Understood and Agreed
	#3	Successful Bidder will designate a representative who will be available during regular City business hours to serve as a primary contact for the City in the implementation of this supply agreement.	Understood and Agreed

	#4	The City of Spokane reserves the right to accept or reject any variance from the published specifications and to award the Bid in a manner that is most advantageous to the continued efficient operation of the City.	Understood and Agreed
	#5	The City reserves the right to accept or reject any part of or all Bids and to accept the Bid(s) deemed to be in the best interest of the City.	Understood and Agreed
	#6	The City of Spokane reserves the option of awarding this purchase by item grouping or by any manner most advantageous for the City. The City may choose from more than one vendor.	Understood and Agreed
	#7	As applicable Safety Data Sheets must be included with Bid. Upload Here:	Materials-Information-Updated-10-24.pdf
	#8	Bidder should be aware that Bids may be rejected if all questions are not completely and correctly answered.	Understood and Agreed
SPECIAL INSTRUCTIONS - GENERAL			
	#1	If the products differ from the provisions contained herein, these differences must be explained in detail.	I acknowledge and agree
	#2	Vendors found to have “overstated” the true ability of their product shall reimburse the City for all costs incurred with remanufacturing or replacement of units until all criteria has been satisfied. These costs shall also include legal, rentals, travel, etc.	I acknowledge and agree
	#3	Successful bidder shall furnish standard warranty. State Warranty here:	60 Months
	#4	Federal and State laws governing this product and its final certification must be satisfied.	Understood and Agreed
	#5	It shall be the Vendor's responsibility to conform to all Federal Standards for certification.	Understood and Agreed
	#6	Delivery time shall be a consideration of awarding this contract. Therefore the City requests a completed delivery date as soon as possible after receipt of any order release against Value Blanket Order.	I acknowledge and agree
	#7	If you took exception to #1 to #6 above, explain in detail.	
TECHNICAL SPECIFICATIONS			

	#1	Technical Requirements: Do you take exceptions to Technical Requirements, 18 through 18.8 as RFQ 6625-26 bid document, located in the 'Documents' tab?	No
	#1.1	Technical Requirements: Do you take exceptions to Technical Requirements, 18 through 18.8 as RFQ 6625-26 bid document, located in the 'Documents' tab?	
	#1.2	Tank(s) must be equipped with an access hole on the top of tanks, and four (4) outlet connections at the bottom for 3-inch connection. Bidder is made aware the City intends to use tank(s) to contain Magnesium Chloride (MgCl2) or Calcium Chloride (CaCl2) liquid deicer.	Acknowledge and Agree
	#1.2.1	The four (4) outlet connections will need fittings that City of Spokane can connect shutoff valves to.	Acknowledge and Agree
	#2	Bidders must submit cover letters stating qualifications for supplying specified items to the City of Spokane. State name(s) and address(es) of Original Equipment Manufacturer (OEM) and distributors (if applicable) to be used in the production and delivery of valve. Upload Letter Here:	City of Spokane Cover Letter.pdf
	#3	TECHNICAL DATA SHEETS: Bidder must provide "technical data sheets" for EACH tank size it is bidding, or bid may be considered non-responsive. UPLOAD ALL TECHINCAL DATA SHEETS HERE AS --SINGLE-- DOCUMENT. As Only One Document Can Be Uploaded Here.	Technical-Guide-March-25.pdf
	#3.1	Bidder must provide ASTM D-1998 documentation for each item type it is bidding.	Understood and Agreed
	#5	As applicable, Safety Data Sheets must be included with Quote. Upload Here	ASTM.pdf
DELIVERY - F.O.B. Delivery Point			
	#1	All products ordered shall be delivered FOB: Destination to the Street Department at 901 N. Nelson Street, Spokane, WA 99202.	I acknowledge and agree
	#1.1	Risk of Loss. Regardless of F.O.B. point, Vendor agrees to bear all risks of loss, injury or destruction of items ordered herein which occur prior to delivery; such loss, injury or destruction shall not release Vendor from any obligation hereunder.	Acknowledge and Agree

	#2	If you took exception to #1 to #3.2 above, explain in detail.	
	#4	Bidder shall state required equipment needed by the City to offload tank(s).	Boom Truck, Crane or Forklift with sling and long forks
	#5	Awarded Bidder(s) shall be required to provide an advance delivery notification of one-week prior to delivery.	Acknowledge and Agree
PRICING			
	#1	Quantities: Quantities are estimates only and are not to be construed as firm or guaranteed. Quantities, when used, are estimates only and are given for the purpose of comparing quotes on a uniform basis. Quantities shall be bid on a more or less basis. Actual usage may be more or less. Payment will only be made for actual quantities ordered, delivered and accepted, whether greater or less than the stated amounts.	Understood and Agreed
	#2	Lead Time: The total number of calendar days for Contractor to physically delivery order quantity at City of Spokane Street Department, 901 N. Nelson Street, Spokane WA 99202, after receipt of a purchase order. Shipping and Freight Charges.	Understood and Agreed
	#3	Shipping and Freight Charges: Standard shipping freight cost will be prepaid and added as a separate line item on invoices. The City reserves the right, upon request, to obtain copies of all shipping invoices incurred by Vendor.	Understood and Agreed
	#4	Sales Tax: The City of Spokane is not a tax exempt entity and is therefore obligated to pay sales tax under Washington State law. Sales tax should --not-- be included in bidder's unit pricing. All submissions shall be tabulated by the City who with the applicable sales tax rate whether that tax shall be charged through the Vendor or paid by the City as use tax	Understood and Agreed
	#5	Awarded Vendor(s) would receive a purchase order based on quantity(s) of tank size(s) selected based on quoted tier-unit pricing.	Understood and Agreed

	#5.1	9-21-2026, RFQ Bid Document was reposted in Documents Tab, as title “RFQ 6625-25 Bid Document (16 Pages) Delivery Location Streets Depart” replacing initial bid document RFQ 6625-26 Bid Document (16 Pages). Reposted corrected delivery location to Street Department, striking through incorrect delivery location text of COS WTEF. No other changes were made to bid document.	Understood and Agreed
	#5.1.1	Additional Costs: Bidder to list any additional costs to be incurred on the RFQ Pricing Page, any other costs added to this purchase after award will not be accepted.	Understood and Agreed
	#5.1.2	Bidder MUST complete “RFQ Pricing Pages 8-13, of RFQ 6625-25 Bid Document located in the “Documents” tab, and upload within ProcureWare as stated on bid proposal, to be considered responsive. Upload Here	Spokane Bid RFQ.pdf
ADDITIONAL DOCUMENTS BIDDER WOULD LIKE TO UPLOAD			
	#1	If you have additional information/documents to submit, upload them here.	Chemical-Resistance-Data-Chart-Updated-10-24.pdf
	#2	If you have additional information/documents to submit, upload them here.	Limited-Warranty-Disclaimer-Poly-Tanks-updated-12-24.pdf
	#3	If you have additional information/documents to submit, upload them here.	vt10500-142.pdf
	#4	If you have additional information/documents to submit, upload them here.	12528.pdf
	#5	If you have additional information/documents to submit, upload them here.	
	#6	If you have additional information/documents to submit, upload them here.	
	#7	If you have additional information/documents to submit, upload them here.	

#8	If you have additional information/documents to submit, upload them here.
#9	If you have additional information/documents to submit, upload them here.
#10	If you have additional information/documents to submit, upload them here.
#11	If you have additional information/documents to submit, upload them here.
#12	If you have additional information/documents to submit, upload them here.
#13	If you have additional information/documents to submit, upload them here.
#14	If you have additional information/documents to submit, upload them here.

These Next Nine Pages (Pages #8-16) Comprising Bid Proposal Must be COMPLETED ENTIRELY and Uploaded Into ProcureWare Via The Response Tab, Bid Section Question Number #1.

BID PROPOSAL.

To: City of Spokane, Purchasing Center
Members of the City Council
City of Spokane, Washington

PROJECT: # **RFQ 6625-26**
Vertical Polyethylene Tank(s) 10,000 Gallons or Larger Tank Sizes, Must Adhere to ASTM D1998 Specifications, Includes Delivery

WITHDRAWL OF BID: Bidder will NOT be withdrawn for a minimum of seventy-five (75) calendar days after the stated Bid Due Date.

MULTIPLE AWARDS: The City reserves the right to make multiple awards among vendors, selecting from quoted offerings that best meet the City's needs, based on tank size offerings, unit pricing, tier-pricing, and lead times.

LEAD TIME: The total number of calendar days for Vendor to delivery order quantity at City of Spokane Street Department, 901 N. Nelson Street, Spokane WA 99202, after receipt of a purchase order.

QUANTITIES: Are estimates only and are not to be construed as firm or guaranteed. Quantities, when used, are estimates only and are given for the purpose of comparing quotes on a uniform basis. Quantities shall be bid on a more or less basis. Actual usage may be more or less.

SHIPPING AND FREIGHT CHARGES: Standard shipping freight cost will be prepaid and added as a separate line item on invoices. The City reserves the right, upon request, to obtain copies of all shipping invoices incurred by Vendor.

PAYMENT: Will only be made for actual quantities ordered, delivered and accepted, whether greater or less than the stated amounts.

SALE TAX. The City of Spokane is not a tax exempt entity and is therefore obligated to pay sales tax under Washington State law. Sales tax should NOT be included in unit pricing. All submissions shall be tabulated by the City who will apply the applicable sales tax rate to bids.

BIDDER'S DECLARATION.
The undersigned bidder certifies that it has read and understands the specifications, and agrees to comply with all applicable federal, state and local laws and regulations. The bidder is advised that by signature of this bid proposal it has acknowledged all bid requirements and signed all certificates contained herein.

BID OFFER. The Unit Prices listed in this bid proposal is tendered as an offer to furnish items at the following unit prices. Bidders are requested to provide unit pricing for tank size of 10,000 gallons and larger tank sizes it offers, meeting stated specifications, providing tier-pricing inclusive of associated lead times, should multiple quantities of tank sizes be ordered. Vendor should also provide applicable manufacturer and part number.

Manufacturer and Part Number	ASTM D1998 Vertical Polyethylene Tank Size Meeting RFQ Specifications	Order Qty	Times (x)	Unit Price Per Tank Size Based On Order Qty	equals (=)	Extended Price Based on Order Qty	Estimated Freight Cost Based On Order Qty	Lead Time For Delivery at Streets Dept ~~COS WTEF~~ after Receipt of Order
N/A	10,000 gallons	1	Times (x)	$	equals (=)	$	$	
	10,000 gallons	2	Times (x)	$	equals (=)	$	$	
	10,000 gallons	3	Times (x)	$	equals (=)	$	$	
	10,000 gallons	4	Times (x)	$	equals (=)	$	$	
	10,000 gallons	5	Times (x)	$	equals (=)	$	$	
	10,000 gallons	6	Times (x)	$	equals (=)	$	$	

Tier-Pricing for Additional ASTM D1998 Vertical Polyethylene Tank Size(s) Larger Than 10,000 Gallons, Meeting RFQ Specifications That Bidders Offers								
Manufacturer and Part Number	**ASTM D1998 Vertical Polyethylene Tank Size Meeting RFQ Specifications:** TANK SIZE:	**Order Qty**	**Times (x)**	**Unit Price Per Tank Size Based On Order Qty**	**equals (=)**	**Extended Price Based on Order Qty**	**Estimated Freight Cost Based On Order Qty**	**Lead Time For Delivery at Streets Dept ~~COS WTEF~~ after Receipt of Order**
VT10500-2500 Den Hartog	10,500 Gallon	1	**Times (x)**	$ 13,936.00	**equals (=)**	$ 13,936.00	$ 5,575.00	45 ARO
		2	**Times (x)**	$ 13,179.00	**equals (=)**	$ 26,358.00	$ 5,575.00	
		3	**Times (x)**	$ 13,193.00	**equals (=)**	$ 39,579.00	$ 5,575.00	
		4	**Times (x)**	$ 13,379.00	**equals (=)**	$ 53,516.00	$ 11,150.00	
		5	**Times (x)**	$ 13,267.00	**equals (=)**	$ 66,335.00	$ 11,150.00	
		6	**Times (x)**	$ 13,193.00	**equals (=)**	$ 79,158.00	$ 11,150.00	

Tier-Pricing for Additional ASTM D1998 Vertical Polyethylene Tank Size(s) Larger Than 10,000 Gallons, Meeting RFQ Specifications That Bidders Offers								
Manufacturer and Part Number	**ASTM D1998 Vertical Polyethylene Tank Size Meeting RFQ Specifications:** TANK SIZE:	**Order Qty**	**Times (x)**	**Unit Price Per Tank Size Based On Order Qty**	**equals (=)**	**Extended Price Based on Order Qty**	**Estimated Freight Cost Based On Order Qty**	**Lead Time For Delivery at Streets Dept ~~COS WTEF~~ after Receipt of Order**
Same as above		1	**Times (x)**	$	**equals (=)**	$	$	
		2	**Times (x)**	$	**equals (=)**	$	$	
		3	**Times (x)**	$	**equals (=)**	$	$	
		4	**Times (x)**	$	**equals (=)**	$	$	
		5	**Times (x)**	$	**equals (=)**	$	$	
		6	**Times (x)**	$	**equals (=)**	$	$	

Tier-Pricing for Additional ASTM D1998 Vertical Polyethylene Tank Size(s) Larger Than 10,000 Gallons, Meeting RFQ Specifications That Bidders Offers								
Manufacturer and Part Number	**ASTM D1998 Vertical Polyethylene Tank Size Meeting RFQ Specifications:** TANK SIZE:	**Order Qty**	**Times (x)**	**Unit Price Per Tank Size Based On Order Qty**	**equals (=)**	**Extended Price Based on Order Qty**	**Estimated Freight Cost Based On Order Qty**	**Lead Time For Delivery at Streets Dept ~~COS WTEF~~ after Receipt of Order**
Same as above		1	**Times (x)**	$	**equals (=)**	$	$	
		2	**Times (x)**	$	**equals (=)**	$	$	
		3	**Times (x)**	$	**equals (=)**	$	$	
		4	**Times (x)**	$	**equals (=)**	$	$	
		5	**Times (x)**	$	**equals (=)**	$	$	
		6	**Times (x)**	$	**equals (=)**	$	$	

Tier-Pricing for Additional ASTM D1998 Vertical Polyethylene Tank Size(s) Larger Than 10,000 Gallons, Meeting RFQ Specifications That Bidders Offers								
Manufacturer and Part Number	**ASTM D1998 Vertical Polyethylene Tank Size Meeting RFQ Specifications:** TANK SIZE:	**Order Qty**	**Times (x)**	**Unit Price Per Tank Size Based On Order Qty**	**equals (=)**	**Extended Price Based on Order Qty**	**Estimated Freight Cost Based On Order Qty**	**Lead Time For Delivery at Streets Dept ~~COS WTEF~~ after Receipt of Order**
Same as above		1	**Times (x)**	$	**equals (=)**	$	$	
		2	**Times (x)**	$	**equals (=)**	$	$	
		3	**Times (x)**	$	**equals (=)**	$	$	
		4	**Times (x)**	$	**equals (=)**	$	$	
		5	**Times (x)**	$	**equals (=)**	$	$	
		6	**Times (x)**	$	**equals (=)**	$	$	

RE: Bid Submission – Qualifications to Supply Vertical Polyethylene Storage Tanks

Dear City of Spokane

Go To Plastics, DBA Go To Tanks, is pleased to submit our bid for the supply of Vertical Polyethylene Storage Tanks in accordance with the specifications and requirements outlined in the bid documents.

Our company has experience supplying custom and standard plastic tanks and related components for a variety of commercial, industrial, municipal, and specialty applications. We work closely with our customers and manufacturing partners to ensure that products meet the required specifications, dimensions, materials, fittings, configurations, and delivery requirements.

Our qualifications include:

- Experience supplying plastic tanks and related components for a wide range of applications.
- Ability to provide products manufactured to specified dimensions, capacities, materials, and configurations.
- Experience coordinating custom fittings, accessories, drawings, and installation requirements.
- Established relationships with qualified domestic manufacturers and suppliers.
- Ability to coordinate production schedules, quality requirements, freight, and delivery to meet project requirements.
- Experienced customer service and order coordination from quotation through final delivery.
- Commitment to providing products that conform to the specifications and requirements of the bid.

We understand the importance of supplying the correct products within the required timeframe and will work closely with the City of Spokane throughout the procurement process to address any questions, documentation requirements, scheduling needs, or product specifications.

Go To Plastics/Go To Tanks is confident in our ability to provide the requested products and fulfill the requirements of this bid. We appreciate the opportunity to participate and look forward to the possibility of working with City of Spokane.

Please contact us if additional information, product documentation, references, or other qualification materials are required.

Sincerely,

Tyna Russell, Mgr

Go To Plastics, DBA Go To Tanks
425-774-4155
tyna@gototanks.com
www.gototanks.com

© DEN HARTOG INDUSTRIES, INC.

Copyright. All information furnished within this document, electronic file or design correspondence is the property of Den Hartog industries, Inc. and shall not be used, disclosed to others or copied without the expressed written consent of Den Hartog Industries, Inc.

KEY	PART NUMBER	DESCRIPTION	QTY.
1	12525	3" FITTING	1
2	12526	3" NUT	1
3	19403	3" GASKET	1
4	12527	3" WASHER	1

Ⓐ

12528

A

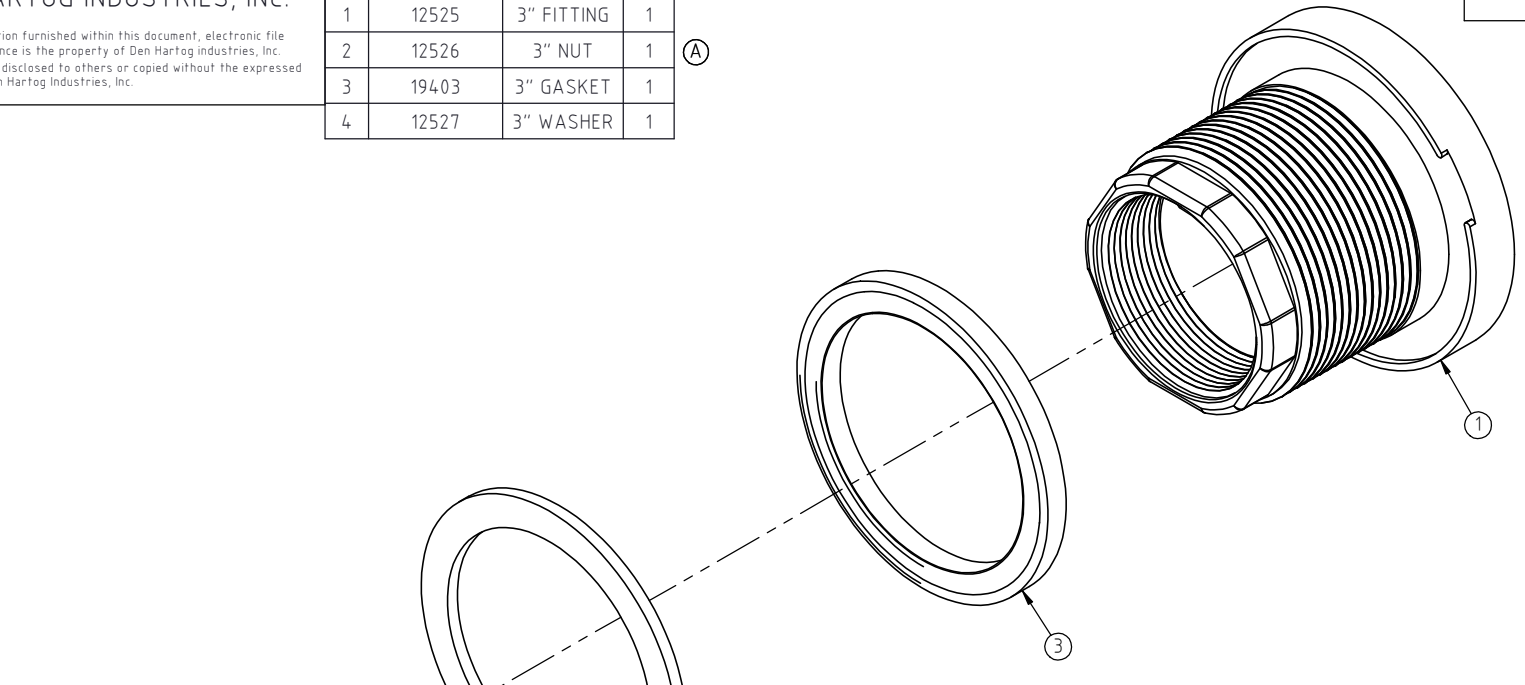

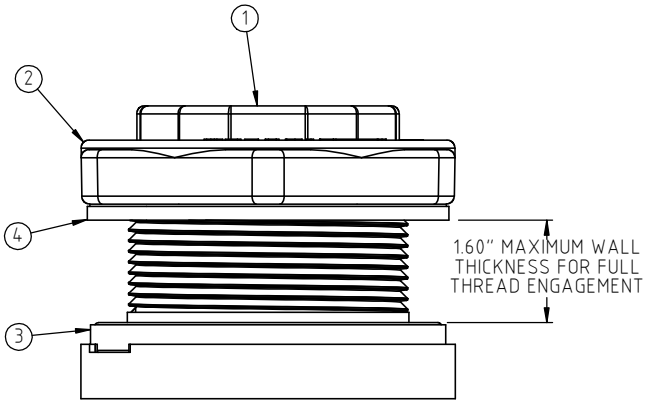

REV	DESCRIPTION	BY / DATE	CCN
A	"DHI" ENGRAVING REMOVED	ADH 9/7/17	3417

DRAWN / DATE: ADH 2/15/08

APPRD. / DATE: MVE 5/16/08

MATERIAL:

ALL DIMENSIONS ARE IN DECIMAL INCHES
TOLERANCES UNLESS OTHERWISE SPECIFIED

NOTE :

TOLERANCE:
.XXX ± .005"
.XX ± .010
ANGLE ± 1°

THIRD ANGLE PROJECTION
ANSI 14.5M

SHOT WEIGHT:

SHIPPING WEIGHT:

FINISH:

NOTES:

Den Hartog
INDUSTRIES, INC.
Ace Roto-Mold Injection Molding Blow Molding Sowjoy

4010 HOSPERS DRIVE S. BOX 425, HOSPERS, IOWA 51238-0425

DESCRIPTION: 3 inch Bulkhead

SCALE: N.S.

PART NO.: 12528

© DEN HARTOG INDUSTRIES, INC.

Copyright. All information furnished within this document, electronic file or design correspondence is the property of Den Hartog industries, Inc. and shall not be used, disclosed to others or copied without the expressed written consent of Den Hartog Industries, Inc.

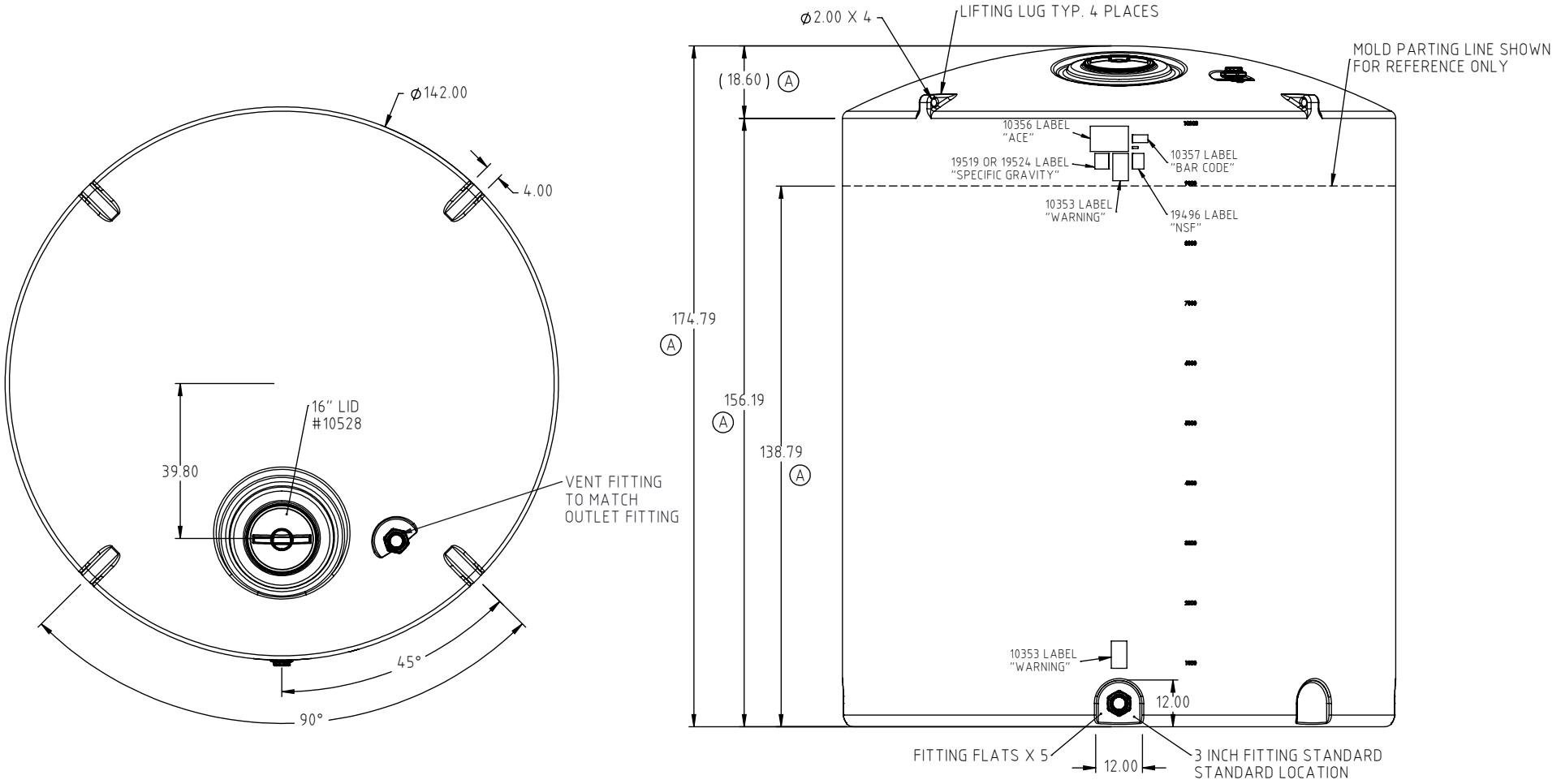

REV.	DESCRIPTION	BY	DATE	CCN
B	CORRECTED S.G. ON 2800 TO 1.8	BES	2/10/2023	4391
A	ADJUSTED. 174.79" WAS 179.00", 138.79" WAS 143.00".	DHJ	8/28/2019	3837

ALL DIMENSIONS ARE IN DECIMAL INCHES
TOLERANCES UNLESS OTHERWISE SPECIFIED

POLYETHYLENE	METAL
±1% @ 68° F	DECIMAL ± .125" FRACTION ± 1/4" ANGLE ± 1°

THIRD ANGLE PROJECTION
ANSI 14.5M

DRAWN / DATE
ADH 7/10/2013

APPRD. / DATE
REH 8/7/2013

SHOT WEIGHT: 2500 LBS S.G. 1.6
(B) 2800 LBS S.G.1.8

SHIPPING WEIGHT: 2502 LBS S.G. 1.6
2802 LBS S.G.1.8

FINISH:

MATERIAL :
10538

NOTES:

Den Hartog
INDUSTRIES, INC.
Ace Roto-Mold • Injection Molding • Blow Molding • Sowjoy
4010 HOSPERS DRIVE S. BOX 425, HOSPERS, IOWA 51238-0425

DESCRIPTION
10500 GALLON VERTICAL TANK

SCALE	PART NO.	SHEET.
N.S.	VT10500-142	1 OF 1

August 29, 2011

To Whom It May Concern:

This letter is to inform you that our polyethylene tanks are designed in accordance with ASTM D1998-06 Standards. All materials utilized in the production of our tanks are virgin grade only, have the maximum available U.V. additives and are shipped to us with a certificate of analysis to insure compliance with established properties.

Sincerely Yours,



Robert E. Hardy
Director of Engineering

Den Hartog
INDUSTRIES, INC.
"Always at Your Service"

LIMITED WARRANTY POLYETHYLENE TANKS

1. Extent and Duration of this Warranty:

Your Den Hartog polyethylene tank is warranted to be free from defects in materials and workmanship under normal use and service for the following periods after date of purchase by the original owner when properly installed, used and maintained:

- Poly Stock Tanks.....24 months
- Septic/Cistern Tanks.....60 months
- Other Poly Tanks.....60 months
- Free Standing Leg Tanks 2350 gallons or over will carry a prorated warranty.....60 Months Prorated (0-36 months – 100%. 37-48 Months – 75%. 49-60 Months – 50%)

Any Den Hartog polyethylene tank product found to be defective in materials or workmanship will be dealt with under the repair and replacement procedure described in this policy.

In the event replacement product is issued, the warranty available for that product shall be the time remaining from the original purchase.

THIS WARRANTY DOES NOT APPLY TO ANY COMPONENT PARTS OR ACCESSORIES USED WITH THE TANK THAT ARE NOT MANUFACTURED BY DEN HARTOG INDUSTRIES, INC.

2. Manufacturer and Warrantor:

Den Hartog Industries, Inc.
4010 Hospers Drive South
P.O. Box 425
Hospers, IA 51238-0425
(712) 752-8432

3. Repair or Replacement Procedure:

If your Den Hartog polyethylene tank product develops a defect during the warranty period, promptly notify our customer service department. Until such notice is received warrantor will not be responsible for any repair, replacement, or partial refund. Notice received more than sixty (60) days after the warranty period will not be valid and the warranty will not apply.

Upon receipt of timely notice from you, and proof of defect, warrantor will have a choice of options at its sole discretion.

a) Warrantor may require you at your own expense to deliver or ship the product to its factory or authorized dealer. Any defective, warranted product will be repaired or replaced and returned to you or your authorized dealer free of charge. Any part returned to warrantor, and found not to be defective, will be returned to you freight collect with explanation.

b) Warrantor may ship a new product to its dealer to be exchanged free of charge for the defective product returned by you.

c) Warrantor may ship or deliver a replacement product to you at your address.

d) Warrantor may refund the product's pro-rated value based on normal life span upon return of the product to it or its authorized dealer.

e) Warrantor may choose another, reasonable procedure to compensate the purchaser.

4. Limitations on Warranty Coverage:

Coverage under this warranty will be effective only when a copy of the original invoice, showing date and location of purchase, accompanies any claim for warranty.

Warrantor has no liability whatsoever and this warranty is null and void if any Den Hartog product has been misassembled or subjected to neglect, negligence, misuse, accident or used in any way contrary to use and maintenance instructions. This includes failure to use Den Hartog supplied metal tank support products appropriate for the type of tank utilized or custom designed support products pre-approved by Den Hartog engineering.

This warranty does not cover any product that has been altered or modified so as to affect the product's use, performance or durability, or that has been modified to change the intended use of the product.

In addition, the warranty does not extend to repairs made necessary by abnormal use, damage, unreasonable use including failure to provide reasonable and necessary maintenance, by use of parts, accessories or other equipment which are incompatible with Den Hartog product, including but not limited to state of the art changes, without assuming any obligation to modify any product previously manufactured.

Warrantor has a policy of continuous product improvement. We reserve the right to change or improve design of any Den Hartog product, including but not limited to state of the art changes, without assuming any obligation to modify any product previously manufactured.

5. Implied Warranties Excluded:

All implied warranties are expressly excluded.

6. Limitation of Consequential Damages:

Warrantor's responsibility under this warranty extends solely to repair or replacement of your Den Hartog product and its component parts. Warrantor does not assume responsibility for, nor shall it be liable for, any special, incidental or consequential damages. Specifically, warrantor assumes no responsibility to the owner for loss of use of the product, loss of time, inconvenience or other damage consequential or otherwise, including, but not limited to loss of revenue or earnings; expense of transporting the product; travel time; telephone, fax, overnight delivery, or postage charges; road service/towing charges; rental during the time warranty repairs are being performed; travel or lodging costs; loss or damage to personal property; or any other losses.

Some states do not allow exclusion or limitation of incidental or consequential damages, so above exclusion or limitation may not apply to you.

7. Purchaser's Rights:

This warranty gives you specific legal rights, and you may also have other rights, which vary from state to state.

8. Exclusive Warranty:

This is the only warranty made by the warrantor on the product and no agent, employee, or other person is allowed to change or add to this warranty. This warranty extends solely to repair or replacement of your Den Hartog product. Warrantor does not assume any liability or responsibility not expressly covered by this limited warranty. This warranty supersedes all other warranties, written or implied.

No other express warranty has been made or will be made on behalf of warrantor with respect to this Den Hartog product or its construction, use, repair, or replacement.

Rotational Molding- Injection Molding – Blow Molding – Sowjoy
4010 Hospers Drive South.P.O. Box 425
Hospers, IA 51238-0425
Ph: 712-752-8432 Fax: 712-752-8222
1-800-342-3408
www.denhartogindustries.com

MATERIALS INFORMATION

Chemical Service Temperatures

Continued or prolonged service with certain chemicals at elevated temperatures may reduce the life of a polyethylene tank. The effects of the temperature on the polyethylene will depend on the chemical chemistry, chemical specific gravity, size and model of tank the chemical is to be stored in, and the tank wall thickness. Depending upon the chemicals to be stored, Ace Roto-Mold tanks will handle sustained temperatures of up to 120° F (49° C) and intermittent temperatures of up to 140° F (60° C). Consult the chemical manufacturer for recommendations regarding storage in polyethylene tanks and service temperature limits. Please note that higher service temperatures will lower the specific gravity rating of the tank.

Ultraviolet light exposure

Ace Roto-Mold tanks are molded from polyethylene compounded with the latest technology in ultraviolet (UV) light stabilizers. These UV stabilizers will reduce the harmful effects of ultraviolet light exposure and are intended to extend the life of a tank over similar materials that are not compounded with stabilizers. Our UV rating is “15” on most product materials which generally means that after 15000 hours of exposure to the sun, there will be 50% of UV protection remaining. Consult the factory for the specific UV rating of the product you are using.

Environmental Stress Crack Resistance (ESCR Rating)

ESCR is a method utilized to evaluate or test processed polyethylene for stress crack resistance when exposed to a chemical for a given amount of time. Most polyethylene resins are rated according to an ESCR value that is specified in the material specifications data supplied by the resin supplier. Certain chemicals, although having no direct chemical effect on polyethylene, may accelerate cracking under mechanical stresses. Elevated temperatures may also affect polyethylene cracking. Although all processed polyethylene resins are subject to stress cracking, some are more resistant to it than others. Please reference the material data specifications for ESCR ratings for the tank model selected. To reduce the effect of ESCR proper care should be taken to reduce stress at fittings, bands, tie down lugs, etc.

Specific Gravity

Specific Gravity is the ratio of the chemical weight per gallon divided by the weight of water per gallon (8.33 lb. per gallon). As an example, if a chemical weighs 10 lb. per gallon, the specific gravity of the chemical is 10.0/8.33 = 1.2. (Metric: kilogram/cubic meter or gram/liter) The Ace Roto-Mold standard tank has 1.7 specific gravity (see page 27 for a specific gravity conversion chart).

Material Color

The standard color for most Ace Roto-Mold tanks is natural (translucent white). Yellow is the standard color for crop care tanks, septic tanks, and liquid feeders. Spot sprayer and vertical tanks may be inventoried in both natural and yellow. Standard stock tanks are spruce green. All tanks may be ordered in non-standard colors such as yellow, black, or green as an option.

FDA Compliance

Ace Roto-Mold tanks are manufactured utilizing FDA compliant resins. Natural, black, and green colored tanks are in full compliance with current FDA standards for polyethylene tanks. However, certain colors (i.e. yellow) when blended into the resin, may affect this compliance. Consult the factory regarding other colors and FDA compliance. Please specify on your tank order if FDA compliance is required and we will assist in your selection.

NSF Compliance

National Sanitary Foundation (NSF) compliance considers a number of factors for approval. Among these are material and final configuration of the product including fittings and accessories that are exposed to the chemical. For this reason, please consult the factory regarding NSF approval.

Proposition 65 Labeling Requirements

Some products as manufactured by Den Hartog Industries, Inc. will require the label (below) when sold in the state of California.



Replacements for damaged or missing labels can be ordered by contacting Den Hartog Industries, Inc. at 1-800-342-3408 or www.denhartogindustries.com.

Den Hartog
INDUSTRIES, INC.

Technical Guide



Den Hartog
INDUSTRIES, INC.

TECHNICAL GUIDE
TABLE OF CONTENTS

	PAGE
ASTM Standard Letter	1
Algae Information Letter Biodiesel	2
Statement	3
Diesel Exhaust Fluid Statement	4
CARB Regulations Statement	5
Santoprene vs EPDM Gaskets	6
Santoprene Chemical Resistance	7-8
Chemical Compatibility for	9
Chlorine Frequently Asked	10-17
Questions Chemical Resistance	18-26
Data Chart Polyethylene Tank	27-28
Anchor Design Tank Date Stamp	29-32
Locations Truckload Capacities	33-36
Tank Shipping/Pallet Options	37-53

August 29, 2011

To Whom It May Concern:

This letter is to inform you that our polyethylene tanks are designed in accordance with ASTM D1998-06 Standards. All materials utilized in the production of our tanks are virgin grade only, have the maximum available U.V. additives and are shipped to us with a certificate of analysis to insure compliance with established properties.

Sincerely Yours,



Robert E. Hardy
Director of Engineering

Information regarding Algae formation in polyethylene storage tanks

Algae (attachment A) are photosynthetic organisms (attachment B) whose formation in water storage tanks is dependent, primarily, upon the presence of light energy and moisture. Since water tanks have the moisture present, the amount of exposure to light energy is critical to prevent Algae growth.

Therefore the transmission of light energy through the polyethylene tank walls to sustain photosynthesis must be eliminated. This is done by adding pigment to the polyethylene at the time of manufacture.

Black colored tanks are the most efficient in preventing light transmission, as only a small amount of pigment is required to eliminate the natural translucence of the polyethylene. Other colors, if highly concentrated, can also eliminate translucence but can severely weaken the tank since the pigment is technically a contaminate when introduced into polyethylene.

Although natural colored polyethylene tanks transmit the most amount of light energy, tanks that are tinted (with the exception of black) will typically provide enough light energy to sustain photosynthesis and promote Algae growth.

Therefore it cannot be stated that all tinted or colored tanks do not promote Algae unless the amount of light energy transmission is properly evaluated. Any amount of light energy will allow Algae formation.



Robert E. Hardy
Director of Engineering

June 10, 2010

To whom it may concern;

Den Hartog Industries Inc. policy regarding the storage of Biodiesel products in pure (B100) formulation shall be as follows:

1. Only ASTM designed tanks are recommended
2. Only above ground storage is permitted.
3. Only 1.9 or greater specific gravity tank weights shall be utilized.
4. Use Viton gaskets in all fittings.
5. Secondary containment shall be provided for all installations and shall be in accordance with all applicable state and local codes.

A one-year limited warranty from the date of manufacture will apply to tanks storing Biodiesel B100 and when in compliance with the above restrictions.

At this time Den Hartog Industries Inc. has no recommendation for the storage of Biodiesel blends (B%/%) at this time.

Sincerely,

Robert E. Hardy
Director of Engineering

March 2, 2011
To Whom It May Concern:

NOx Abatement in Diesel Engines
Using SCR Technology

DHI Application Information

Effective January, 2010 the EPA will implement regulations affecting diesel engines manufactured for use in the USA. This regulation requires the use of SCR (Selective Catalytic Reduction) technology and introduces DEF (Diesel Exhaust Fluid) in to the exhaust gases to meet the EPA requirement for NOx levels. This regulation will be applicable to all diesel-powered products.

DEF is a chemical solution consisting of 32.5% + or – 0.7% of chemically pure urea mixed with deionized water and has been classified as a non-hazardous chemical.

DHI offers effective storage solutions for DEF with our broad line of polyethylene tanks.

The following specifications apply to all DHI tank products:

1.
2. Vertical Tanks are designed in accordance with ASTM D-1998 standards and are in compliance with ISO 22241-3, section 4.1.2. Tanks available for transportable applications are designed according to established engineering practices and tested. Only virgin polyethylene is utilized with densities ranging from .938 to .944 depending upon the size of tank. Standard specific gravities are 1.6 to 2.0 depending upon tank size and configuration specified. Other specific gravities are available upon request.

3. Lids are manufactured from high-grade injection molded polypropylene.

4. Fittings are available in high-grade injection molded polypropylene or machined type 316 stainless steel. Gaskets are available in Santoprene or EPDM.

5. Installation – reference the DHI Applications Guideline Manual for recommendations regarding handling, installation, plumbing, venting and site requirements.

6. DEF temperature exposure should be limited to between 15°F to 85°F to prevent freezing or loss of properties.

Sincerely Yours,

Robert E. Hardy

To whom it may concern:

Den Hartog Industries Inc. utilizes the Petro Seal system from Arkema to meet CARB/EPA fuel permeation regulations for fuel tanks. This material is covered under executive order C-U-05-005.

Robert E. Hardy
Director of Engineering

Santoprene vs EPDM Gaskets

Santoprene is a vulcanized rubber material that processes like a thermoplastic that runs in Den Hartog Industries Inc. injection presses.

Sanotprene advantages – Santoprene has similar properties to EPDM. In fact, Santoprene is made from a derivative of EPDM. Santoprene's environmental aging resistance and liquid resistance are the same as EPDM. But beyond that, you will find that Santoprene is superior in regards to performance and cost. Parts made from Santoprene offer excellent heat aging, providing outstanding durability. Santoprene also has excellent resistance to cut growth while flexing, high tear strength and superior resistance to fatigue. Please reference the attached list of chemicals that Santoprene shows resistance to, and that list is the same as an EPDM list.

In terms of quality, Ace Roto-Mold has never had a tank returned or problem reported where our gasket failed when an EPDM gasket would have worked. Our gaskets have never failed when used with chemicals they are meant to be resistant to.

Robert E. Hardy
Director of Engineering

Santoprene Chemical Resistance:

Santoprene is a thermoplastic rubber designed to offer chemical resistance equivalent to neoprene. It is resistant to a wide variety of solvents and chemicals. It is not readily soluble in common solvents but will swell in aromatic solvents and halogenated organic solvents.
High polar fluids such as alcohols, ketones, glycols, esters, and aqueous solutions of acids, salts, and bases have little effect upon Santoprene rubber. Weight changes in these fluids are less than 10%, and physical property changes are minimal.

Little or No Effect on Santoprene

Acetaldehyde	Chloroacetic acid	Linseed Oil	Potassium salts
Acetic acid	Chronic acid	Magnesium salt	Silver salts
Acetic Anhydride	Chromium salts	Maleic acid	Soap solutions
Acrylonitrile	Copper salts	Manganese salts	Sodium salts
Aluminum Chloride	Ethylene glycol	Mercury salts	Sodium hydroxide
Aluminum sulfate	Ferric salts	Methanol	Sodium hypochlorite
Ammonia	Fluoborate salts	Natural gas	Stearic acid
Ammonium salts	Fluoboric acid	Nickel salts	Sulfur dioxide
Ammonium hydroxide	Fluosilicic acid	Nitric acid-10%	Sulfuric acid, dil.
Amyl acetate	Formaldehyde	Nitroethane	Sulfurous acid
Antimony salts	Formamide	Nitrogen oxides	Tannic acid
Arsenic salts	Formic acid	Nitrous acid	Tanning extracts
Barium salts	Glucose	Oils, animal	Trisodium phosphate
Benzoic acid	Glycerins	Oils. mineral	Urea
Bleaching liquor	Hydrochloric acid	Oils. vegetable	Uric acid
Boric acid	Hydrocyanic acid	Oxalic acid	Water
Bromine	Hydrogen peroxide	Oxygen	Water (brine)
Butyric acid	Hydrogen sulfide	Phosphoric acid	Water (stoam)
Calcium salts	Iodine and solutions	Phthalic acid	Zinc salts
Carbon Dioxide	Lactic acid	Phosphoric acid	
Chlorine (wet/dry)	Lead salts	Plating solutions	

Minor Effect

Acetates	Butane	Me Et Ketone	Skydrol 500-B4
Acetone	Butanol	Nitric acid-30%	Sulfuric acid-90%
Alcohols	Essential Oils	Nitrobenzene	Tetrahydrofuran
Amyl alcohol	Ethers	Oleic acid	Turpentine
Aniline	Ethanol	Phenol	
Benzaldehyde	Furfural	Propanol	
Benzyl alcohol	Lithium grease	Pyridine	

Severe Effect-NOT Recommended

Benzene	Cyclohexane	Kerosene	Nitric acid- 70%
Carbon tetrachloride	Ethyl chloride	Trichloroethylene	Perchloroethylene
Chlorobenzene	Freon	Lacquer	Toluene
Chloroform	Gasoline, unleaded	Naphtha	Xylene

Chemical Compatibility for Chlorine

Following are our recommendations based on current information:

Chemical	Concentration, %	Temperature of use, °C	Comments
Sodium hypochlorite	Less than 12%	23 (73° F)	Suitable under normal use conditions.
	Less than 12%	40 (104° F)	Some attack. Have seen 2 mil of surface erosion over reportedly 2-year period, which has weakened the tank. Would give it only a 5 out of 10 rating where 10 is best and 0 is the worst.
	12-16.5%	23 (73° F)	Suitable under normal use conditions.
	12-16.5%	40 (104° F)	Unsuitable
	Above 16.5%	23 (73° F) and 40 (104° F)	Unsuitable.
Sodium hydroxide (caustic soda)	35% of less	23 (73° F) and 40 (104° F)	Suitable under normal use conditions.
	50% or above	23 (73° F)	Not without testing
	50% or above	37 (99° F)	Unsuitable
Sodium chlorite	30%	23 (73° F) and 40 (104° F)	Suitable assuming normal use conditions.
	50%	23 (73° F)	Suitable. Rating of 8.
	50%	40 (104° F)	Not without testing.

Additional recommendations:

- Room temperature is assumed at 23° C (73° F)
- Non-controlled temperature is assumed at 40° C (104° F).
- PVC or CPVC (schedule 80) fittings with viton gaskets are required.
- Use of flexible connectors with fittings is also required.
- Secondary containment according to local regulations is recommended.
- We recommend opaque white or light color tanks.
- Use a 1.9 specific gravity rating on tanks larger than 1,000 gallons.
- An 18 month limited warranty applies to tanks storing Chlorine when in compliance with the above restrictions.

What chemicals can I store in your tanks?

Identify the chemical(s) to be stored in the tanks. Be certain to obtain a Certificate of Composition, MSDS (Material Safety Data Sheet) or other data from the chemical supplier so that the actual chemical compounds can be identified properly to evaluate the effect of the chemical on polyethylene storage containers. Be sure to check that the tank, fittings and fitting gasket material are compatible with the chemicals to be contained and the anticipated storage temperatures. Review the Chemical Resistance Data Chart on page 15. This will determine if the chemical to be stored is compatible with polyethylene. If this resistance data does not list the chemical you intend to store in the tank, contact the chemical manufacturer for recommendations regarding storage in polyethylene tanks.

What materials are used to manufacture your poly tanks?

Ace Roto-Mold tanks are offered in medium and high density polyethylene. The polyethylene utilized in the manufacture of Ace Roto-Mold poly tanks depends upon the size of the tank. There are minimal differences in the characteristics between medium and high density polyethylene. High density polyethylene offers a slightly higher density, chemical resistance and impact resistance than medium density polyethylene. Vertical tanks 3100 gallons and larger, Cone Bottom tanks 4600 gallons and larger, all Septic and Cistern tanks, all Crop Care tanks, as well as 2350, 2750 and 3250 gallon Free Standing Leg tanks are all made standard in high-density polyethylene. Please note that all Ace Roto-Mold tanks are available in high density polyethylene if requested.

How heavy a material can polyethylene tanks hold?

Ace Roto-Mold standard tanks have a specific gravity of 1.7. Our vertical tanks ranging from 20-625 gallons are standard with a specific gravity of 2.0. Specific gravity is the ratio of the chemical weight per gallon divided by the weight of water per gallon (8.33 lb per gallon). As an example, if a chemical weighs 10 lb per gallon, the specific gravity of the chemical is 10.0/8.33 = 1.2 SG. (Metric: kilogram/cubic meter or gram/liter) Substances with a specific gravity greater than 1.0 are heavier than water, those with a specific gravity of less than 1.0 are lighter than water.

What is the wall thickness of your tanks?

Wall thickness varies from the top to the bottom of the tank. Our tanks 2000 gallons or smaller tend to have an even wall thickness due to the roto-molding process. Ace Roto-Mold standard tanks have a specific gravity of 1.7. We use the right amount of material and resin grades in order to insure that specific gravity is reached. We do provide wall thickness maps for our vertical tanks 5000 gallons and up as well as our cone bottom tanks 4600 gallons and up. Please consult the factory regarding these maps.

What are drill points on your tanks?

Drill points are a molded in feature of a tank used as a quick locating point for fittings. Drill points are typically located in standard fitting locations only. They appear as an indention and are typically ¼" in diameter but may be even bigger in large tanks. They are often mistaken as a partially drilled hole. Even though the drill point is indented, the wall thickness is compensated for on the inside wall of the tank during the molding process. I.E., if you were able to run your hand over the inside wall where the drill point is located, you would feel a bump that would be comparable in height to the indentation on the outside. The only time drill points are visible is when tanks are ordered with no fittings or with fittings installed in non-standard locations.

What are witness lines in tanks?

Witness lines are what appear to be cracks in the finished product. These are caused when a crack develops in the mold; typically in radiuses where the mold experiences the greatest amount of stress. When this crack goes undetected, it tends to open up during the molding process due to heat which allows molten plastic to seep into the crack. Upon close inspection after the product is demolded, the witness line is a mirror image of the crack in the mold. If you were to run your fingernail across the witness line you would feel that the plastic is protruding rather than indenting. In fact, this witness line is able to be scraped away leaving a solid wall of plastic. This defect is cosmetic only and does not affect the integrity of the product in any way.

Is there UV protection in the resin you use?

Ace Roto-Mold tanks are molded from polyethylene compounded with the latest technology in ultraviolet (UV) light stabilizers. The UV stabilizers will reduce the harmful effects of ultraviolet light exposure and are intended to extend the life of a tank over similar materials that are not compounded with stabilizers. Our UV rating is "15" on most product materials which generally means that after 15,000 hours of exposure to the sun, there will be 50% of UV protection remaining. This rating also needs to consider location and prolonged exposure to the sun. Consult the factory for the specific UV rating of the product you are using.

Do your tanks have a UL rating?

UL 94 groups materials into categories based on their flammability. The polyethylene we use has undergone the horizontal flame test and has a UL94HB rating which means that specimens must not have a burn rate greater than 1.5 inches/minute for thickness between .120 and .500 inches and 3 inches/minute for a thickness less than .120 inches. Specimens must stop burning before the flame reaches the 4 inch mark.

Are your above ground tanks NSF approved?

National Sanitary Foundation (NSF) compliance considers a number of factors for approval. Among these are material and final configuration of the product including fittings and accessories that are exposed to the chemical. For this reason, please consult the factory regarding NSF approval.

Do your tanks contain any BPA's?

Our tanks are made from polyethylene. Bisphenol A (BPA) is not used as a component in the manufacture of polyethylene. BPA is primarily used in polycarbonate and in epoxies used to line cans. Polyethylene does not leach chemicals and has been used for direct food contact for many years.

How much additional capacity does the Dualline™ Tanks, containment tank, have?

All outer/containment tanks have a minimum of 10% over capacity of the main tank as is the required standard.

Can a SS bolt-in 2" Fitting be installed instead of the polypropleyen fitting in the Dualline™ tanks?

There are different fitting options for the tanks, please contact Customer Service for a specific request.

Is it possible to install more than one fitting on the sidewall of a Dualline™ tank?

No, multiple fittings will not be allowed on the tanks sidewall. Additional fittings can be installed on the top of tank for draw out of the top.

Is the service fitting required on the Dualline™ tanks?

The service fitting is optional on the tanks.

Does the color of a tank give any indication as to the quality of the tank?

Ace Roto-Mold tanks are manufactured from polyethylene compounded with ultraviolet (UV) stabilizers. These UV stabilizers will reduce the harmful effects of ultraviolet light exposure and are intended to extend the life of a tank over similar materials that are not compounded with stabilizers. The standard color for most Ace Roto-Mold tanks is natural (translucent white). All tanks may be ordered in non-standard colors such as yellow, black, green or blue as an option. The color of the tank does not increase the life expectancy or UV resistance of a tank. Please note however, that the color may have an effect on FDA compliance.

Does the color of a tank have an impact on Algae growth?

Black colored tanks are the most efficient in preventing light transmission. Other colors, if highly concentrated, can also eliminate translucence but can weaken the tank since the pigment is technically a contaminate when introduced to polyethylene. Although natural colored polyethylene tanks transmit the most amount of light energy, tanks that are tinted (with the exception of black) will typically provide enough light energy to sustain photosynthesis and promote Algae growth. Therefore it cannot be stated that colored tanks do not promote Algae unless the amount of light energy transmission is properly evaluated. Any amount of light energy will allow Algae formation.

Can I store chemicals or fertilizers in Ace H_2O Water Only storage tanks?

No, Ace H_2O Water Only storage tanks are designed for water storage only. They are not rated to contain chemicals or fertilizers.

Are your tanks FDA compliant?

Ace Roto-Mold tanks are manufactured utilizing FDA compliant resins. Natural, black, blue and green colored tanks are in full compliance with current FDA standards for polyethylene tanks. However, certain colors (i.e. yellow) when blended in resin, may effect compliance. Consult the factory regarding other colors and FDA compliance. Please specify on your tank order if FDA compliance is required and we will assist in your selection.

What is the maximum temperature that your tanks can withstand?

Depending upon the chemicals to be stored, Ace Roto-Mold tanks will handle sustained temperatures of up to 120° F (49° C) and intermittent temperatures of up to 140° F (60° C). Consult the chemical manufacturer or chemical resistance chart on page 15 for recommendations regarding storage in polyethylene tanks and service temperature limits. Please note that higher service temperatures will lower the specific gravity rating of your tank.

Can I store petroleum products in your tanks?

Tanks manufactured by Ace Roto-Mold are suitable for storage of new, unused motor oil up to 500 gallons (1893 liters) in capacity. Industry testing has indicated that long-term storage (5 years or more) of oil can soften the tank walls and cause swelling. Therefore while limited capacity storage is permitted, the user must be aware of these long-term implications and limited tank life. All fitting gaskets must be Viton. Further, it is recommended that all oil installations feature secondary containment to manage any environmental implications. Used motor oil is not recommended for storage in Ace Roto-Mold tanks due to

contaminants. Also note that only cross-linked tanks are suitable for gasoline, diesel, kerosene and other petroleum based fuels.

Can I store Deionized water in your tanks?

Polyethylene tanks manufactured by Ace Roto-Mold are suitable for storage of Deionized water up to 100° F (38° C).

Do you manufacture tanks made from Nylon materials?

Nylon has become a popular material in the rotational molding industry. Nylon is best known for its strength, creep resistance, fatigue resistance and high service temperature. It has excellent chemical resistance to a wide range of reagents including gasoline and diesel fuel. Ace Roto-Mold can produce tanks in a Nylon material in sizes of 20 gallons or less.

Does the presence of ozone effect a polyethylene tank?

Ozone is sometimes used for the purification of water. According to the Ozone Solutions (http://www.ozoneapplications.com/), High Density Polyethylene (HDPE) is rated excellent for compatibility with ozone. Low Density Polyethylene (LDPE) is rated as Good compatibility (minor effect, slight corrosion or discoloration). Our DHI polypropylene fittings are only rated as Fair for ozone compatibility, so the fittings are not recommended for continuous use. Softening, loss of strength, and/or swelling may occur. Their data does not specify the ozone concentrations, although the materials were tested at ozone levels exceeding 1000 PPM. 100% ozone is not recommended in our tanks. Tanks should be inspected on a semi-annual basis.

Can your tanks be pressurized?

No, our tanks cannot be pressurized or exposed to vacuum.

Can your tanks be buried?

The only Ace Roto-Mold tanks designed for burial are the septic and cistern tanks. Other tanks are not designed to handle the pressure of surrounding earth and should not be buried.

What is the warranty on your tanks?

Den Hartog Industries' polyethylene tanks are warranted to be free from defects in materials and workmanship under normal use and service for a period of 24 months on polyethylene Stock Tanks, 60 months on Septic/Cistern Tanks and 36

months on all other polyethylene tanks. Warrantor's responsibility extends solely to repair and replacement of your Den Hartog product and its components parts. Warrantor does not assume responsibility for, nor shall be liable for, any special, incidental or consequential damages.

How many years will my tank last?

Life expectancy of a tank depends upon multiple variables. Some of these variables include; the type of material stored in the tank, if the tank is kept indoors or outdoors, if the tank is stationary or used in transportable applications, UV exposure. All of these factors, including several more, have an effect on a polyethylene tank.

Will freezing temperatures hurt my poly tank?

Freezing temperatures will not have an effect on a polyethylene tank, however if you plan to keep a liquid in the tank that you know will freeze, be sure to leave sufficient room for expansion. Be aware there is a greater chance of a polyethylene tank cracking during transportation in cold temperatures.

Fittings that are exposed to chemicals will have a low temperature rating equivalent to the freezing limit of the chemicals the fitting is exposed to. Note that heaters, heat bands or chemical inhibitors that prevent chemical freeze up will allow the fittings to be exposed to ambient temperatures below the freeze point of the chemical. Again, the low temperature rating of all fittings must be above the point at which the chemicals freeze or solidify.

Is there some way to tell when my tank was made?

All Ace Roto-Mold tanks are embossed with a date stamp in the month/year format. Please reference page 21 to view common stamp placements on different styles of Ace Roto-Mold tanks.

Are your tanks FDA approved and are they safe for water storage?

It is safe to store water in Ace Roto-Mold above ground tanks and below ground cisterns. Our natural colored polyethylene tanks and polypropylene lids and fittings are produced from FDA compliant materials. Please consult the factory regarding additional FDA compliant colors that are available.

What is the recommended tightness of the hoops on my tank?

The hoops should be tightened for full contact with the tank, however not to the point of tank distortion. The holes used to mount the hoop should be positioned close to the tank to allow full contact at the bottom of the leg and hoop contact

point. Please note that hoops with both j-bolts and feet are not intended to be tightened to the point of complete contact with the mounting surface.

Are these tanks repairable through plastic welding?

Yes, polyethylene tanks can be repaired through welding by qualified personnel.

How tight can I tighten a bulkhead fitting?

Be careful not to over tighten poly fittings. If over tightened, these fittings can be damaged and leak. Tighten nut to hand-tight plus ½ turn. If thread sealant is used, be certain that it is rated for use with the fittings and chemical to be contained.

What type of surface is required for placement of a vertical tank?

When selecting the tank site, insure that the site is level and that adequate drainage is provided for water runoff. The bottom of all tanks must be completely supported. Reinforced concrete support pads are recommended for tanks with capacities over 1000 gallons (3785 liters). In all cases be certain that the base material is designed to support the bearing capacity requirements of the tank, including seismic and wind loads. If the tank is installed in a stand or skid, note that the bearing capacity requirements of the concrete or soil will be increased. Always anchor the tank according to seismic or wind load zone requirements for the site. Always consult the applicable building codes governing the tank site for specific support and anchoring requirements. See Polyethylene Storage Tank Anchor Design on page 18.

Do you offer any type of Tank Anchoring Kits?

Den Hartog Industries currently offers a Tank Anchor Block Weldment for our Vertical Tanks. This Anchor Block Weldment facilitates anchoring the tank in position. Each tank requires 4 Anchor Block Weldments. A concrete pad that is properly reinforced and thick enough for the expansion anchor is required. **(Expansion anchors, eyebolts, cable clamps, wire ropes and cables thimbles provided by customer)**

Can I paint my tank?

Although there are products being marketed that claim to have successful adhesion to polyethylene, DHI does not support this practice. Paints with adhesion promoters will work for only a limited time before peeling is experienced. Polyethylene has a high thermal coefficient of expansion and contraction that causes the adhesion failure.

Can a septic tank be used for potable water?

No, drinking water can only be stored in our below ground cisterns and above ground tanks. The pigments used in septic tanks are not approved by the NSF for potable water.

Can I use a ribbed septic tank or cistern above ground?

Ace Roto-Mold's standard septic and cistern tanks are designed for below ground use only. Use of these tanks above ground could result in the deformation of the tank. However, Ace Roto-Mold Aquifer Low Profile Cistern Tanks are designed for and can be utilized in both below and above ground applications.

What certifications do you have on your septic tanks?

Ace Roto-Mold septic tanks are both IAPMO Z1000 and CAN/CSA-B-66 approved. IAPMO Z1000 standards are ANSI-accredited consensus standards for waste disposal products. They cover material, testing and marking requirements of these products. A CAN/CSA-B-66 standards specify minimum design and material requirements as well as manufacturing practices and markings for prefabricated septic tanks. Essentially all of the Canadian provinces require CSA approval prior to approving or evaluating a septic tank.

CHEMICAL RESISTANCE DATA CHART

Chemical Resistance Key:

R - Resistant N - Not Resistant V - Variable Resistance (Contact DHI) U – Unknown

Caution Key:

(P) - Plasticizer (A) - Known Stress Crack Agent

(O) - Oxidizer (B) - Suspected Stress Crack Agent

CHEMICAL	CONCENTRATION	PLASTICS MAX TEMP (°F)		SEAL MATERIALS MAX TEMP (°F)			METALS
		POLYETHYLENE	POLYPROPYLENE	EPDM	NITRILE (BUNA-N)	Santoprene (TPE)	316 SS
Acetaldehyde (A)	100%	70	R	V	R	R	N
Acetic Acid (A)	10%	R	R	R	N	R	A
Acetic Acid (A)	60%	100	R	R	N	R	A
Acetic Annydride (B)		N	73	N	N	R	V
Aluminum Chloride		R	R	R	V	R	N
Aluminum Fluoride		R	R	V	V	R	N
Aluminum Sulfate		R	R	V	V	R	
Alums - all types		R	R	V	V	R	R
Ammonia - dry gas	100%	R	R	R	V	R	R
Ammonium Carbonate		R	R	R	V	R	V
Ammonium Chloride	Sat'd	R	R	R	V	R	V
Ammonium Fluoride	Sat'd	R	R	R	V	R	N
Ammonium Hydroxide	10%	R	R	V	R	R	R
Ammonium Hydroxide	28%	R		V	N	R	R
Ammonium Nitrate	Sat'd	R	R	V	R	R	R
Ammonium Persulfate	Sat'd	R	R	V	N	R	R
Ammonium Sulfate	Sat'd	R	R	R	R	R	V
Ammonium Metaphosphate	Sat'd	R	R	V	R	R	R
Amyl Acetate (BP)	100%	N	N	R	N	R	R
Amyl Alcohol (AP)	100%	R	R	V	V	N	R
Amyl Chloride (P)	100%	N	N	N	N	N	R
Aniline (AP)	100%	N	N	V	N	N	R
Aqua Regia (O)		N	N	N	N	N	V
Arsenic Acid		R	R	V	V	R	R
Aromatic Hydrocarbons (BP)		N	N			R	
Ascorbic acid	10%	R	R			N	

CHEMICAL	CONCENTRATION	PLASTICS MAX TEMP (°F)		SEAL MATERIALS MAX TEMP (°F)			METALS
		POLYETHYLENE	POLYPROPYLENE	EPDM	NITRILE (BUNA-N)	Santoprene (TPE)	316 SS
Barium Carbonate	Sat'd	R	R	V	R	R	R
Barium Chloride	Sat'd	R	R	V	V	R	R
Barium Hydroxide		R	R	V	V	R	R
Barium Sulfate	Sat'd	R	R	V	V	R	R
Barium Sulfide	Sat'd	R	R	V	V	R	R
Beer		R	R	R	V	R	R
Benzene (BP)		N	N	N	N	N	R
Benzoic acid		R	R	N	N	R	R
Bismuth Carbonate	Sat'd	R	R	70	70	R	
Bleach Lye	10%	R	R			R	
Borax	Sat'd	R	R	R	V	R	R
Boric acid		R	R	V	V	R	R
Boron Trifluoride		R	R			N	
Brine		R	R	V	V	R	R
Bromine - liquid (O)		N	N	N	N	R	N
Butanediol (A)	10%	R	R			N	
Butanediol(A)	60%	R	R			N	
Butanediol (A)	100%	R	R			N	
Butter (B)		R	R			R	
Butyl Acetate (BP)	100%	N	N	N	N	N	R
Butyl Alcohol (A)	100%	R	R	V	V	R	R
Butyric Acid - conc. (P)	Conc.	N	R	N	N	N	R
Cadmium Salts		R	R			R	
Calcium Bisulfide		R	R	R	V	N	R
Calcium Carbonate	Sat'd	R	R	V	V	R	R
Calcium Chlorate	Sat'd	R	R	V	V	R	R
Calcium Chloride	Sat'd	R	R	V	V	R	R
Calcium Hydroxide	Conc.	R	R	R	V	R	R
Calcium Hypochlorite - bleach soln.		R	R	V	N	R	V
Calcium Nitrate	50%	R	R	V	V	R	R
Calcium Oxide	Sat'd	R	R	V	V	R	R
Calcium Salts		R	R			R	
Calcium Sulfate		R	R	V	V	R	R
Camphor Oil (BP)		N	73	N	R	R	R
Carbon Dioxide - all conc.		R	R	V	R	R	R

CHEMICAL	CONCENTRATION	PLASTICS MAX TEMP (°F)		SEAL MATERIALS MAX TEMP (°F)			METALS
		POLYETHYLENE	POLYPROPYLENE	EPDM	NITRILE (BUNA-N)	Santoprene (TPE)	316 SS
Carbon Disulphide		N	N	N	N	N	R
Carbon Monoxide		R	R	V	R	R	R
Carbon Tetrachloride (P)		N	N	N	N	N	R
Carbonic Acid		R	R	V	70	R	R
Castor Oil - conc. (A)		R	R		R	R	R
Chlorine - dry gas (O)	100%	N	N	N	N	N	R
Chlorine Liquid (O)		N	N	N	N	N	N
Chlorobenzene (BP)		R	73	N	N	N	R
Chloroform (BP)		N	N	N	N	N	R
Chlorosulfonic Acid	100%	N	N	N	N	N	N
Chromic Acid	10%	R	R	70	N	R	70
Chromic Acid	50%	R	73	N	N	R	V
Cider (A)		R	R			R	
Citric Acid - (A)	Sat'd	R	R			R	R
Coconut Oil Alcohols (A)		R	73	N	R	R	R
Coffee		R	R	V	R	R	R
Cola Concentrates (A)		R	R			R	
Copper Chloride	Sat'd	R	R	V	R	R	R
Copper Cyanide	Sat'd	R	R	V		R	R
Copper Fluoride	2%	R	73	V	80	R	
Copper Nitrate	Sat'd	R	R	V	V	R	R
Copper Sulfate	Sat'd	R	R	V	V	R	R
Corn Oil (A)		R	73	N	R	N	R
Cottonseed Oil (A)		R	R	V	R	R	R
Cresol	100%	N	73		N	R	R
Cuprous Chloride	Sat'd	R	R			R	
Detergents, synthetic (A)		V	V			R	R
Developers. photographic		R	R	V	V	R	R
Dextrin	Sat'd	R	R	R	V	R	R
Dextrose	Sat'd	R	R	R	R	R	R
Diazo Salts		R	R			N	
Dibutyl Phthalate (B)		R	73	V	N	R	R
Dichlorobenzene (BP)		R	N	N	N	N	R
Diethyl Ketone (BP)		N	73	N	N	R	
Diethylene Glycol (A)		R	R			R	

CHEMICAL	CONCENTRATION	PLASTICS MAX TEMP (°F)		SEAL MATERIALS MAX TEMP (°F)			METALS
		POLYETHYLENE	POLYPROPYLENE	EPDM	NITRILE (BUNA-N)	Santoprene (TPE)	316 SS
Diglycolic Acid (A)		R	R	V	V	R	
Dimethylamine		N	73	V	N	R	R
Disodium Phosphate		R	R	V	70	R	R
Emulsions, photographic (A)		R	R	V	V	R	R
Epsom Salts - Magnesium Sulfate		R	R	R	V	R	R
Ethyl Acetate (BP)	100%	R	N	N	N	N	R
Ethyl Alcohol (A)	100%	R	R	R	V	N	R
Ethyl Alcohol (A)	35%	R	R	R	V	N	R
Ethyl Benzene (BP)		N	N	N	N	N	R
Ethyl Chloride (P)		N	N	R	R	N	R
Ethyl Ether (P)		N	N	V	N	N	R
Ethylene Chloride (BP)		N	N	N	N	N	R
Ethylene Glycol (A)		R	R	R	R	R	R
Fatty Acids (A)		R	R	N	V	R	R
Ferric Chloride	Sat'd	R	R	V	V	R	N
Ferric Nitrate	Sat'd	R	R	V	V	R	R
Ferrous Chloride	Sat'd	R	R	R	V	R	N
Ferrous Sulfate		R	R	V	V	R	R
Fish Solubles (A)		R	R	N	R	R	R
Fluoboric Acid		R	R	70	N	R	R
Fluorosilicic Acid - conc.		R	73		N	R	R
Fluosilicic Acid	32%	R	R		N	R	R
Formic Acid - all conc.		R	R	R	N	R	R
Fructose	Sat'd	R	R			R	R
Fruit Pulp (B)		R	R			R	
Furfural (P)	100%	N	N	V	N	R	R
Furfuryl Alcohol (BP)		N	N			R	
Gallic Acid (A)	Sat'd	R	R	N	N	R	R
Gasoline (PB)		N	N	N	R	N	R
Glucose		R	R	V	R	R	R
Glycerine (A)		R	R	V	R	R	R
Glycol (A)		R	R			R	R
Glycolic Acid (A)	30%	R	73	R	V	N	R
Grape Sugar- ag	Sat'd	R	R			R	
Heptane (PB)		N	N	N	R	R	R

CHEMICAL	CONCENTRATION	PLASTICS MAX TEMP (°F)		SEAL MATERIALS MAX TEMP (°F)			METALS
		POLYETHYLENE	POLYPROPYLENE	EPDM	NITRILE (BUNA-N)	Santoprene (TPE)	316 SS
Hexachlorobenzenes		R	R				
Hexanol, Tertiary (A)		R	R	N	R	R	R
Hydrobromic Acid	50%	R	R	R	N	R	N
Hydrochloric Acid - all conc.		R	R	V	V	R	V
Hydrocyanic Acid	Sat'd	R	73	V	V	R	R
Hydrofluoric Acid (A)	30%	R	R	V	N	N	N
Hydrofluoric Acid (A)	50%	R	73	V	N	N	N
Hydrogen	100%	R	R	R	V	R	R
Hydrogen Chloride - dry gas		R	R			R	
Hydrogen Peroxide	30%	R	73	V	N	R	R
Hydrogen Sulfide		R	R	R	N	R	R
Hypochlorous Acid - conc		R	73	104	N	R	
Inks (A)		R	R	V	V	R	R
Iodine in Potassium Sol'n (O)		73	73	V	80	R	N
Lead Acetate	Sat'd	R	R	R	V	R	R
Lead Nitrate		R	R	V	V	N	
Lime		R	73	V	V	R	V
Magnesium Carbonate	Sat'd	R	R	V	R	R	R
Magnesium Chloride	Sat'd	R	R	R	R	R	N
Magnesium Hydroxide	Sat'd	R	R			R	
Magnesium Nitrate	Sat'd	R	R			R	
Magnesium Sulfate	Sat'd	R	R	R	V	R	R
Mercuric Chloride	Sat'd	R	R	V	V	R	N
Mercuric Cyanide	Sat'd	R	R	V	V	R	A
Methyl Alcohol (A)	100%	R	R	V	V	R	R
Methylene Chloride (PB)	100%	N	N	N	N	N	R
Milk		R	R	R	R	R	R
Mineral Oils (P)		70	N	N	R	N	R
Molasses		R	R	V	R	R	R
Naphtha (PA)		N	73	N	V	N	R
Naphthalene (PB)		N	73	N	N	N	R
Nickel Chloride - conc.		R	R	R	R	R	R
Nickel Nitrate	Sat'd	R	R	R	V	R	A
Nickel Sulfate - conc.		R	R	R	R	R	
Nicotine - dilute (A)		R	R		N	N	R

CHEMICAL	CONCENTRATION	PLASTICS MAX TEMP (°F)		SEAL MATERIALS MAX TEMP (°F)			METALS
		POLYETHYLENE	POLYPROPYLENE	EPDM	NITRILE (BUNA-N)	Santoprene (TPE)	316 SS
Nitric Acid (O)	30%	R	R		N	R	R
Nitric Acid (O)	50%	70	N	N	N	R	R
Nitric Acid (O)	70%	70	N	N	N	R	R
Nitric Acid (O)	98%	N	N	N	N	R	R
Nitrobenzene (PB)	100%	N	N	N	N	N	R
Nonyl phenol ethoxylate (B)		N	N			R	
Octane		R	R			N	
Oxalic Acid (A)	Sat'd	R	R			R	
Perchloroethylene (P)		N	N	N	N	N	R
Phosphorous Pentoxide		73	73			R	R
Photographic Solutions		R	R	V	V	R	R
Plating Solutions							
Brass (A)		R	R	70	V	R	
Cadmium (A)		R	R	R	V	R	
Gold (A)		R	R	V	V	R	
Nickel (A)		R	R	V	V	R	R
Silver (A)		R	R	V	V	R	
Tin (A)		R	R	R	V	R	
Zinc (A)		R	R	V	V	R	
Potassium Acetate		R	R			R	
Potasstum Bicarbonate	Sat'd	R	R	R	R	R	R
Potassium Bromate	10%	R	R	R	V	R	R
Potassium Bromide	Sat'd	R	R	R	R	R	R
Potassium Carbonate		R	R	V	R	R	R
Potassium Chlorate	Sat'd	R	R	V	70	R	R
Potassium Chloride	Sat'd	R	R	V	R	R	V
Potassium Chromate	40%	R	R	R	V	R	R
Potassium Cyanide	Sat'd	R	R	V	R	R	R
Potassium Dichromate	40%	R	R	R	R	R	R
Potassium Ferri/Ferro Cyanide	Sat'd	R	R	70	N	N	R
Potassium Fluoride		R	R	R	V	R	R
Potassium Hydroxide	20%	R	R	R	V	R	R
Potassium Hydroxide - conc.		R	R			R	
Potassium Nitrate	Sat'd	R	R	V	V	R	R
Potassium Perchlorate	10%	R	R	R	N	R	

CHEMICAL	CONCENTRATION	PLASTICS MAX TEMP (°F)		SEAL MATERIALS MAX TEMP (°F)			METALS
		POLYETHYLENE	POLYPROPYLENE	EPDM	NITRILE (BUNA-N)	Santoprene (TPE)	316 SS
Potassium Permanganate	20%	R	73	R	N	R	R
Potassium Persulfate	Sat'd	R	R	R	N	N	
Potassium Sulfate - conc		R	R	R	V	N	R
Potassium Sulfide - conc.		R	R	70		N	V
Potassium Sulfite - conc.		R	R	R	V	N	R
Propargyl Alcohol (A)		R	R	R	70	R	
Propyl Alcohol (A)		R	R	V	R	R	R
Propylene Dichloride (PB)	100%	N	N			N	
Propylene Glycol (A)		R	R	R	R	R	R
Pyridine (B)		N	N	N	N	R	V
Rayon Coagulating Bath (B)		R	R				
Resorcinol	Sat'd	R	R				
Salicylic Acid	Sat'd	R	R	R	N	R	R
Selenic kid		R	R	70	N		
Shortening (A)		R	R				
Silver Nitrate Solution		R	R	R	N	R	R
Soap Solution - any conc. (A)		V	R			R	R
Sodium Acetate	Sat'd	R	R	R	N	R	R
Sodium Benzoate	35%	R	R	R	V	R	
Sodium Bicarbonate	Sat'd	R	R	R	V	R	R
Sodium Bisulfate	Sat'd	R	R	V	V	R	R
Sodium Bisulfite	Sat'd	R	R	R	R	R	R
Sodium Bromide	Dilute	R	R	R	N	R	R
Sodium Carbonate - conc		R	R	R	V	R	R
Sodium Chlorate	Sat'd	R	R	V	V	R	R
Sodium Chloride	Sat'd	R	R	V	R	R	V
Sodium Chlorite	30%	R	73	70	N	R	
Sodium Cyanide		R	R	R	V	R	R
Sodium Dichromate	Sat'd	R	R	R	R	R	R
Sodium Ferri/Ferro Cyanide	Sat'd	R	R	R	70	R	R
Sodium Fluoride	Sat'd	R	R	R	100	R	R
Sodium Hydroxide - conc.		R	R	V	V	R	R
Sodium Hydroxide	35%	R	R	V	R	R	R
Sodium Hyrdoxide	50%	R	R	V	R	R	R
Sodium Hypochlorite	12%	R	73	N	N	R	N

CHEMICAL	CONCENTRATION	PLASTICS MAX TEMP (°F)		SEAL MATERIALS MAX TEMP (°F)			METALS
		POLYETHYLENE	POLYPROPYLENE	EPDM	NITRILE (BUNA-N)	Santoprene (TPE)	316 SS
Sodium Hypochlorite	16.5%	R	73	N	N	R	N
Sodium Hypochlorite	>16.5%	R	73	N	N	R	N
Sodium Nitrate		N	R	R	V	R	R
Sodium Sulfate		R	R	V	R	R	R
Sodium Sulfide	Sat'd	R	R	R	V	R	R
Sodium Sulfite	Sat'd	R	R	R	V	R	R
Sodium thiosulphate pentanydrate		R	R	R		N	R
Stannic Chloride	Sat'd	R	R	R	R	R	N
Stannous Chloride	Sat'd	R	R	V	V	R	R
Starch Solution (A)	Sat'd	R	R	R	V	R	R
Stearic Acid (A)	100%	R	73	N	V	R	R
Sulfuric Acid	50%	R	R	R	N	R	R
Sulfuric Acid (O)	70%	R	73	R	N	R	V
Sulfuric Acid (O)	80%	R	73	70	N	R	N
Sulfuric Acid (O)	96%	70	N	70	N	R	N
Sulfuric Acid (O)	98%	N	N	70	N	R	N
Sulfuric Acid - fuming (O)		N	N	N	N	R	N
Sulfurous Acid		R	R	N	N	N	R
Tallow (P)		R	R	N	R	R	R
Tannic Acid (A)	Sat'd	R	73	R	R	R	R
Tartaric Acid	10%	R	R	N	R	R	R
Tetrahydrofuran		N	N	N	N	R	
Titanium Tetrachloride (B)	Sat'd	N	R	N	N	N	V
Toluene (PB)		N	N	N	N	N	R
Transformer Oil		R	73	N	V	N	R
Trichloroethylene (PB)		N	N			N	
Triethylene Glycol (B)		R	R			N	
Trisodium Phosphate	Sat'd	R	R			R	R
Turpentine (P)		N	N			N	
Urea	30%	R	R			R	
Urine		R	R			R	
Vanilla Extract (A)		R	R			R	
Varnish		R	R			N	
Vinegar		R	R			R	
Water (Potable)		R	R	R	R	R	R

CHEMICAL	CONCENTRATION	PLASTICS MAX TEMP (°F)		SEAL MATERIALS MAX TEMP (°F)			METALS
		POLYETHYLENE	POLYPROPYLENE	EPDM	NITRILE (BUNA-N)	Santoprene (TPE)	316 SS
Water (Salt)		R	R	V	V	R	R
Water (Sea)		R	R	V	V	R	V
Water (Swimming Pool)		V	100	73	73	R	
Wetting Agents (A)		V	V			R	
Whiskey (A)		R	R	R	R	R	R
Wines (B)		R	R	R	R	R	R
Xylene (P)		N	N	N	N	N	R
Yeast		R	R			R	
Zinc Bromide	Sat'd	R	R			R	
Zinc Carbonate	Sat'd	R	R	70	70	R	V
Zinc Chloride	Sat'd	R	R	R	V	R	V
Zinc Oxide	Sat'd	R	R			R	
Zinc Stearate		R	R			R	
Zinc Sulfate	Sat'd	R	R	V	V	R	R

The information contained within this chart is based upon data supplied by resin manufacturers and is intended to be a general guide. Note that this data does not encompass all applications or service temperatures. For this reason, Den Hartog Industries, Inc. makes no claim as to the accuracy of this data and recommends that in all cases the final determination of suitability between the chemical(s) to be contained and the polyethylene tank material be verified with the chemical manufacturer(s).

Polyethylene Storage Tank Anchor Design 5/25/10

Wind Velocity Pressure = q	q = 0.00256 x I x V^2 x k		I = Importance Factor		0.95	V = Wind Velocity in MPH		110	k = Gust Correction Factor = (h/33)^2/7									
q = basic velocity pressure = psf			Pressure Coefficient		0.6	Safety Factor		0.66	Seismic Coefficient		0.5							
Tank	Tank	Tank	Total	Roof	Sidewall	Projected	Projected	Projected	Gust	Wind	Total Wind	Max. Uplift	Number	Number	Load Per	Load Per	Calculated	Required
Model	Diameter	Weight	Height	Height	Height	Roof Area	Cyl. Area	Total Area	Correct.	Pressure	Load	At Anchor	Of Anchors	Of Anchor	Anchor Bolt	Wire Rope	Min.Wire Rope	Min. Wire Rope
	Inches	Lb.	Inches	Inches	Inches	Ft.^2	Ft.^2	Ft.^2	Factor	Lb./Ft^2	Lb.	Lb.	Required	Bolts Reqd.	Lb.	Lb.	Diameter	Dia.(3/16" min.)
	=d	*=w*	*=ht*	*=h1*	*=h2*	*=a1*	*=a2*	*=aT*	*=k*	*=q*	*=p*	*=R_a*	*=Na*	*=Nb*	*=(R_a)/3*	*=R_a*	*=Md*	*=Rd*
VT12500-142	142	3402	208	19.02	188.98	14.07	186.35	200.42	0.83	24.48	2944.07	15311.10	4	3	5103.70	15311.10	0.536	1/2
VT10500-142	142	2800	175	19.02	155.98	14.07	153.81	167.88	0.79	23.30	2347.29	8254.43	4	3	2751.48	8254.43	0.289	5/16
VT10500-142	142	2500	175	19.02	155.98	14.07	153.81	167.88	0.79	23.30	2347.29	8470.46	4	3	2823.49	8470.46	0.296	5/16
VT9500-120	120	2352	213	16.08	196.92	10.05	164.10	174.15	0.84	24.65	2575.60	16231.51	4	3	5410.50	16231.51	0.568	9/16
VT9150-120	120	2200	206	16.08	189.92	10.05	158.27	168.32	0.83	24.41	2465.67	13153.46	4	3	4384.49	13153.46	0.460	7/16
VT7800-120	120	1900	176	16.08	159.92	10.05	133.27	143.32	0.79	23.34	2007.13	8832.75	4	3	2944.25	8832.75	0.309	5/16
VT7000-142	142	1750	123	19.02	103.98	14.07	102.53	116.60	0.72	21.07	1474.08	3273.21	4	3	1091.07	3273.21	0.115	3/16
VT6500-120	120	1502	152	16.08	135.92	10.05	113.27	123.32	0.76	22.38	1656.19	6168.39	4	3	2056.13	6168.39	0.216	1/4
VT6250-102	102	1550	191	13.67	177.33	7.26	125.61	132.87	0.81	23.89	1904.84	11110.24	4	3	3703.41	11110.24	0.389	5/16
VT5150-102	102	1350	159	13.67	145.33	7.26	102.95	110.21	0.77	22.67	1499.25	6944.27	4	3	2314.76	6944.27	0.243	1/4
VT5000-102	102	1302	156	13.67	142.33	7.26	100.82	108.08	0.77	22.55	1462.36	6635.52	4	3	2211.84	6635.52	0.232	1/4
VT4200-96	96	950	148	12.86	135.14	6.43	90.09	96.52	0.75	22.21	1286.49	6029.87	4	3	2009.96	6029.87	0.211	1/4
VT4000-96	96	900	142	12.86	129.14	6.43	86.09	92.52	0.75	21.95	1218.68	5441.54	4	3	1813.85	5441.54	0.190	3/16
VT3400-102	102	585	107	13.67	93.33	7.26	66.11	73.37	0.69	20.25	891.36	2733.42	4	3	911.14	2733.42	0.096	3/16
VT3100-102	102	550	103	13.67	89.33	7.26	63.28	70.54	0.68	20.03	847.66	2487.72	4	3	829.24	2487.72	0.087	3/16
VT3000-90	90	550	118	12.06	105.94	5.65	66.21	71.87	0.71	20.82	897.82	3554.52	4	3	1184.84	3554.52	0.124	3/16
VT2500-90	90	420	100	12.06	87.94	5.65	54.96	60.62	0.67	19.86	722.30	2372.25	4	3	790.75	2372.25	0.083	3/16
VT2150-102	102	417	71	13.67	57.33	7.26	40.61	47.87	0.61	18.01	517.26	860.32	4	3	286.77	860.32	0.030	3/16
VT2050-86	86	402	93	11.52	81.48	5.16	48.66	53.82	0.66	19.45	628.17	1933.86	4	3	644.62	1933.86	0.068	3/16
VT2000-90	90	375	83	12.06	70.94	5.65	44.34	49.99	0.64	18.83	564.81	1423.30	4	3	474.43	1423.30	0.050	3/16
VT2000-64	64	465	156	8.57	147.43	2.86	65.52	68.38	0.77	22.55	925.21	7264.05	4	3	2421.35	7264.05	0.254	1/4
VT1650-85	85	276	74	11.39	62.61	5.04	36.96	42.00	0.62	18.22	459.22	1087.41	4	3	362.47	1087.41	0.038	3/16
VT1525-64	64	350	122	8.57	113.43	2.86	50.41	53.27	0.71	21.02	671.87	3988.02	4	3	1329.34	3988.02	0.140	3/16
VT1500-85	85	250	69	11.39	57.61	5.04	34.01	39.05	0.61	17.86	418.50	905.42	4	3	301.81	905.42	0.032	3/16
VT1500-64	64	335	115	8.57	106.43	2.86	47.30	50.16	0.70	20.67	622.04	3433.18	4	3	1144.39	3433.18	0.120	3/16
VT1350-85	85	228	64	11.39	52.61	5.04	31.06	36.10	0.59	17.48	378.64	737.93	4	3	245.98	737.93	0.026	3/16
VT1200-64	64	275	94	8.57	85.43	2.86	37.97	40.83	0.66	19.51	477.95	2052.99	4	3	684.33	2052.99	0.072	3/16
VT1050-85	85	190	52	11.39	40.61	5.04	23.97	29.01	0.56	16.48	286.81	394.40	4	3	131.47	394.40	0.014	3/16
VT1000-64	64	250	81	8.57	72.43	2.86	32.19	35.05	0.64	18.70	393.22	1367.53	4	3	455.84	1367.53	0.048	3/16

Notes:

1. The wire rope utilized in accordance with these recommendations must be equal to or greater in rated breaking strength to 6 x 37 Fiber Core Wire Rope as rated by the standard U.S. Simplified Practice Recommendations 198-50 or better. The wire rope coating must be electro-deposition zinc. Galvanized rope must be rated for a minimum of 110% of the calculated tensile strength.

2. This anchor design allows for a Seismic 4 condition and UBC wind load rating of 110 MPH.

3. Secondary containment installations must be installed in accordance with these results, but are not included with these recommendations.

4. Anchor bolts utilized in compliance with these recommendations must be certified for the tensile loads specified and installed in accordance with the manufacturers recommendations.

5. The installation of tank anchors according to these recommendations is based upon installation by qualified personnel.

6. The anchor installation presented in these recommendations must be inspected at a minimum of 90 day intervals, or upon the occurrence of each recorded Weather Service wind gust advisory equal to or greater than 50% of the wind load specified in this analysis.

7. The effective pull-out strength of the anchors specified in these recommendations are subject to the installation foundation. Therefore, this analysis does not remove the importance of the foundation design from these recommendations. The concrete mix, thickness, re-bar selection and site preparation and suitability are the responsibility of the installer.

8. These recommendations do not modify nor extend the warranty provided by Den Hartog Industries for any tank installed in accordance with this recommendation.

© DEN HARTOG INDUSTRIES, INC.

Copyright. All information furnished within this document, electronic file or design correspondence is the property of Den Hartog industries, Inc. and shall not be used, disclosed to others or copied without the expressed written consent of Den Hartog Industries, Inc.

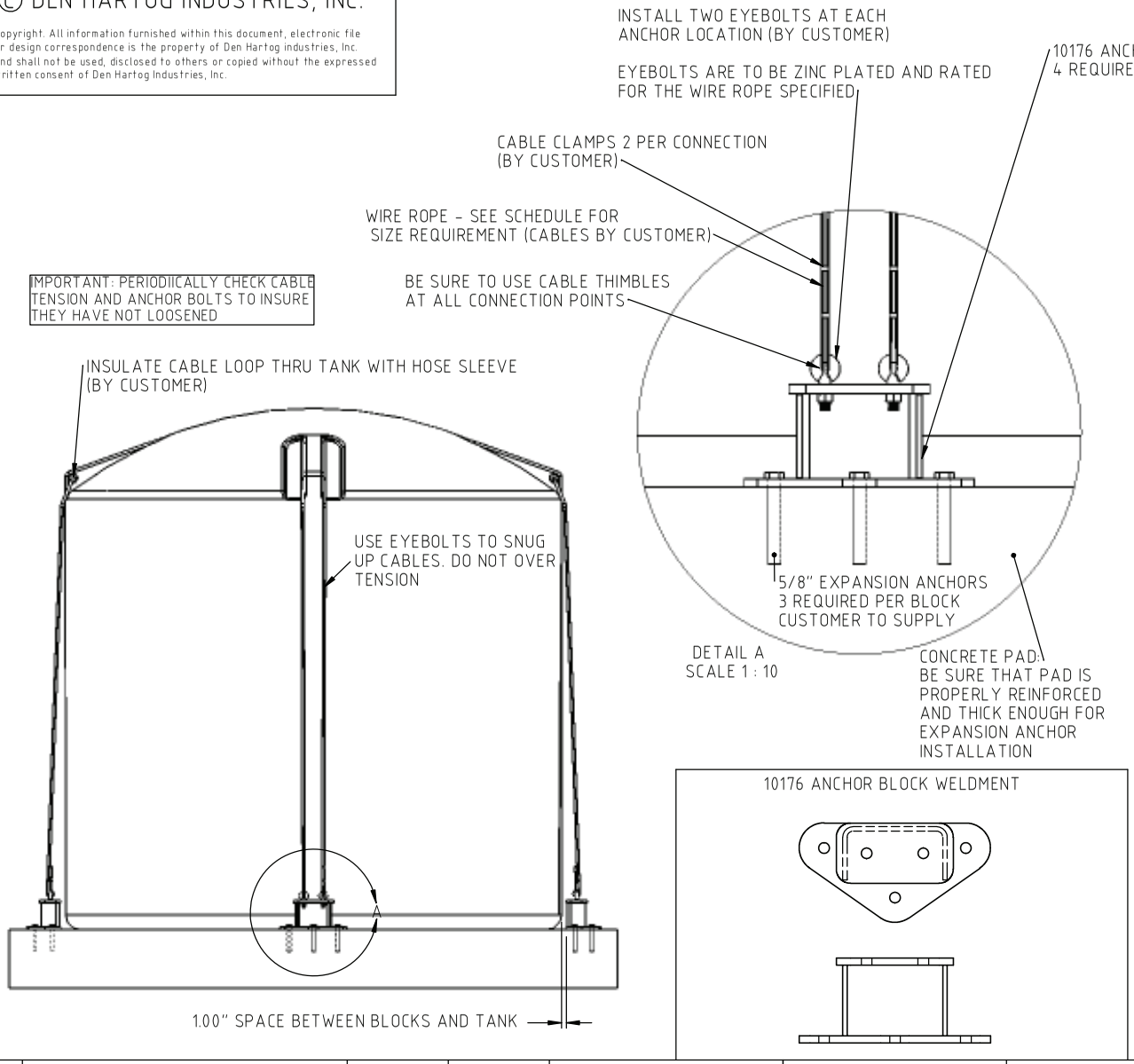

			V=110 MPH	V=150 MPH
Tank Model	Number Of Anchor Blocks Required	Number Of Anchor Bolts Required Per Block	Required Min. Wire Rope Dia. (.250" min.)	Required Min. Wire Rope Dia. (.250" min.)
	=Na	=Nb	=Rd	=Rd
VT12500-142	4	3	0.250	0.375
VT10500-142	4	3	0.250	0.250
VT10500-142	4	3	0.250	0.250
VT9500-120	4	3	0.250	0.375
VT9150-120	4	3	0.250	0.375
VT8000-120	4	3	0.250	0.250
VT7800-120	4	3	0.250	0.250
VT7000-142	4	3	0.250	0.250
VT6500-120	4	3	0.250	0.250
VT6250-102	4	3	0.250	0.250
VT5150-102	4	3	0.250	0.250
VT5000-102	4	3	0.250	0.250
VT4200-96	4	3	0.250	0.250
VT4000-96	4	3	0.250	0.250
VT3400-102	4	3	0.250	0.250
VT3100-102	4	3	0.250	0.250
VT3000-90	4	3	0.250	0.250
VT2500-90	4	3	0.250	0.250
VT2150-102	4	3	0.250	0.250
VT2050-86	4	3	0.250	0.250
VT2000-90	4	3	0.250	0.250
VT2000-64	4	3	0.250	0.250
VT1650-85	4	3	0.250	0.250
VT1525-64	4	3	0.250	0.250
VT1500-85	4	3	0.250	0.250
VT1500-64	4	3	0.250	0.250
VT1350-85	4	3	0.250	0.250
VT1200-64	4	3	0.250	0.250
VT1050-85	4	3	0.250	0.250
VT1000-64	4	3	0.250	0.250

10176 ANCHOR BLOCK WELDMENT

REV	DESCRIPTION	BY / DATE	CCN

DRAWN / DATE: REH/5/1/12

APPRD. / DATE: DHJ/5/1/12

MATERIAL:

ALL DIMENSIONS ARE IN DECIMAL INCHES
TOLERANCES UNLESS OTHERWISE SPECIFIED

POLYETHYLENE: ±1% @ 68° F

METAL: DECIMAL ± .125" FRACTION ± 1/4" ANGLE ± 1°

THIRD ANGLE PROJECTION ANSI 14.5M

SHOT WEIGHT:

SHIPPING WEIGHT:

FINISH:

NOTES:

Den Hartog INDUSTRIES, INC.

Ace Roto-Mold Injection Molding Blow Molding Sowjoy

4010 HOSPERS DRIVE S. BOX 425, HOSPERS, IOWA 51238-0425

DESCRIPTION: ANCHOR INSTALLATION DETAILS VT5150 AND LARGER

SCALE: N.S.

PART NO.: 10175

Date Stamp Locations

VERTICAL TANKS

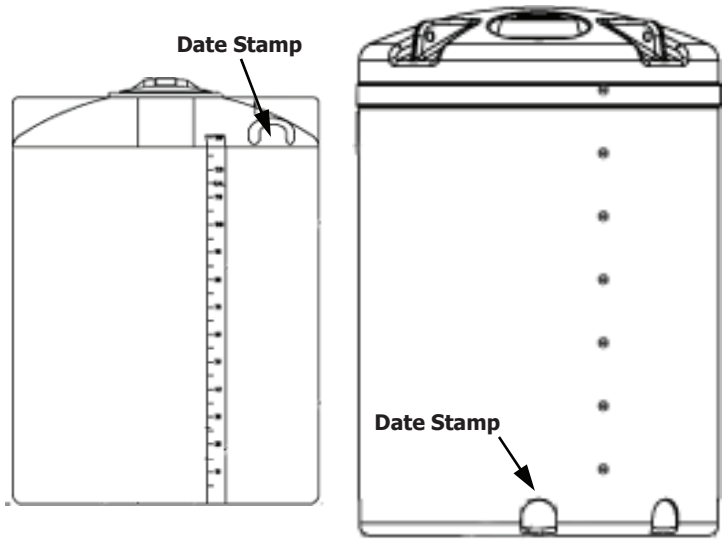

LEG TANKS

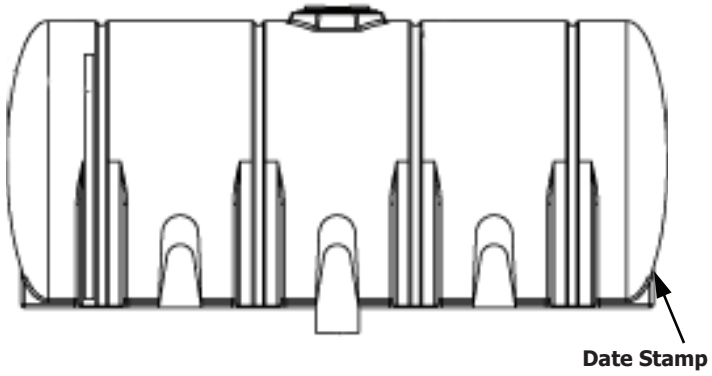

ELLIPTICAL TANKS

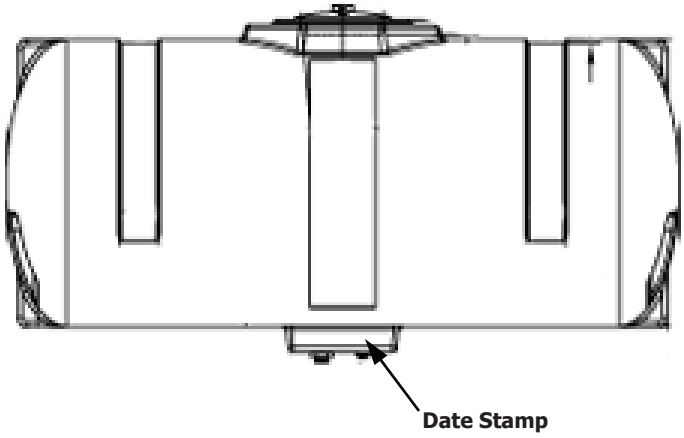

CONE BOTTOM TANKS

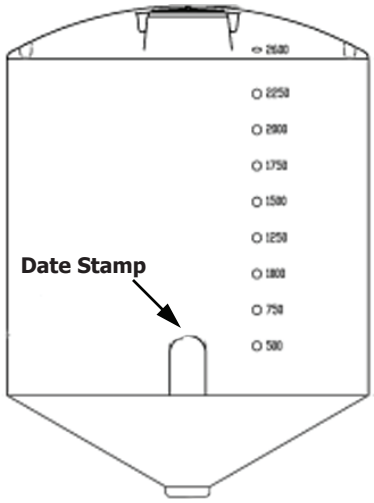

INDUCTOR TANKS

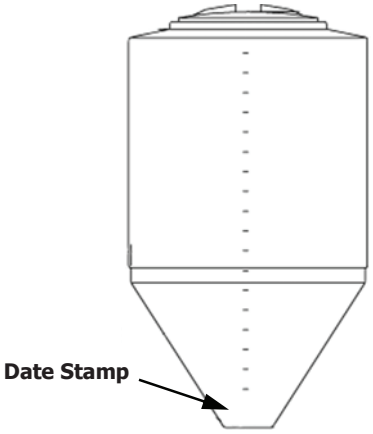

SPOT SPRAYER APPLICATOR TANKS

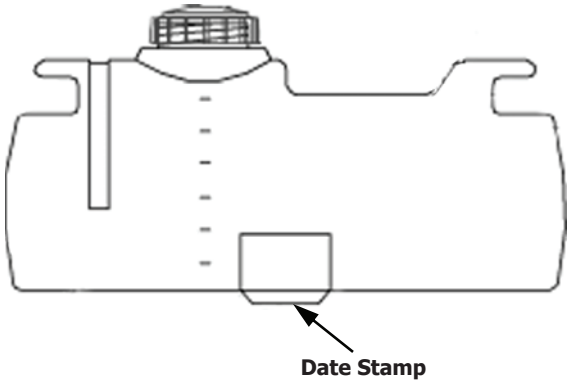

OPEN TOP CONTAINMENT TANKS

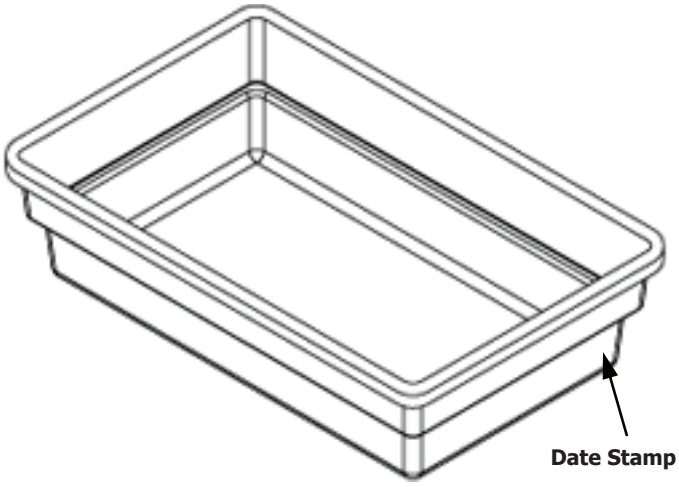

PICKUP TANKS

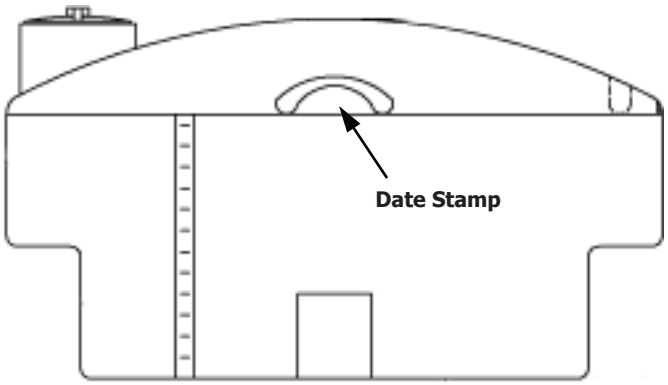

STOCK TANKS

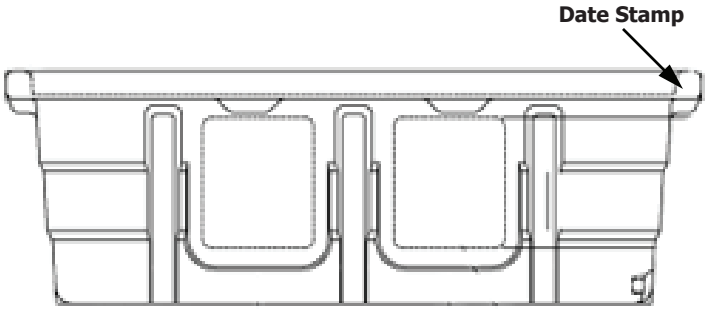

HORIZONTAL TANKS

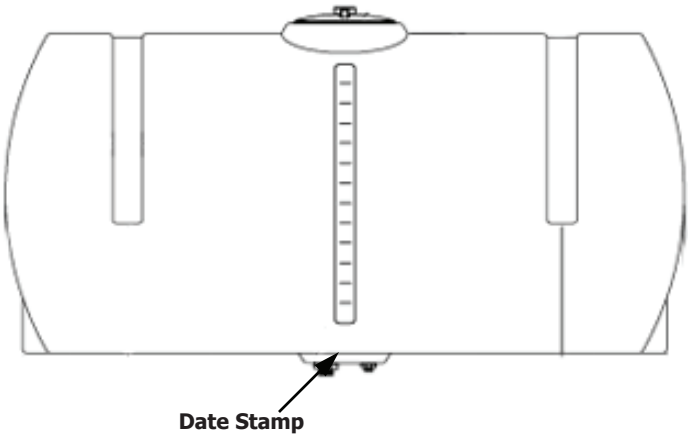

STACKABLE TOTES

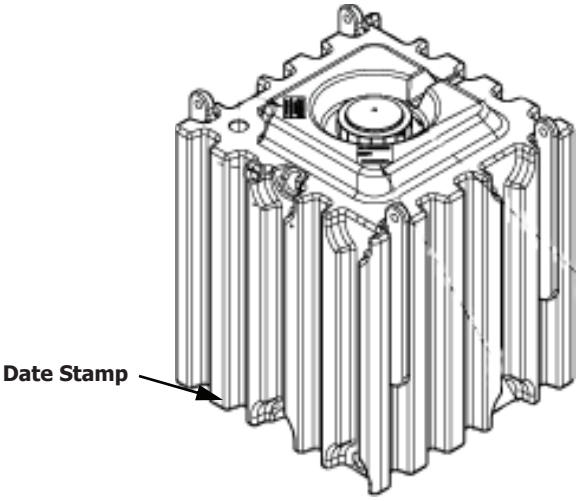

BULK STORAGE TANKS

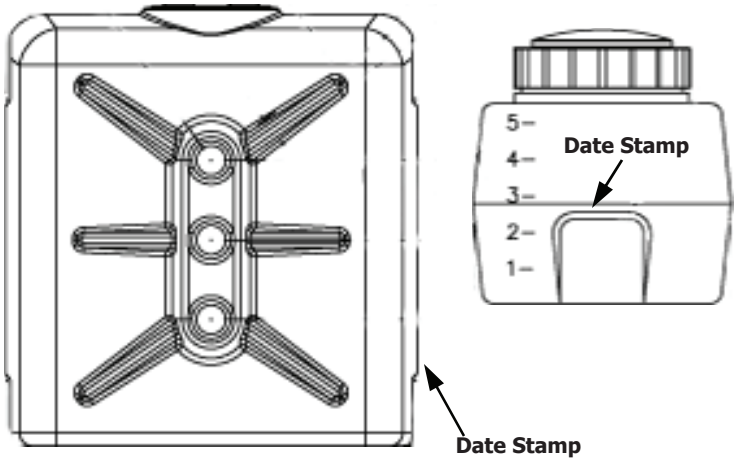

PCO TANKS

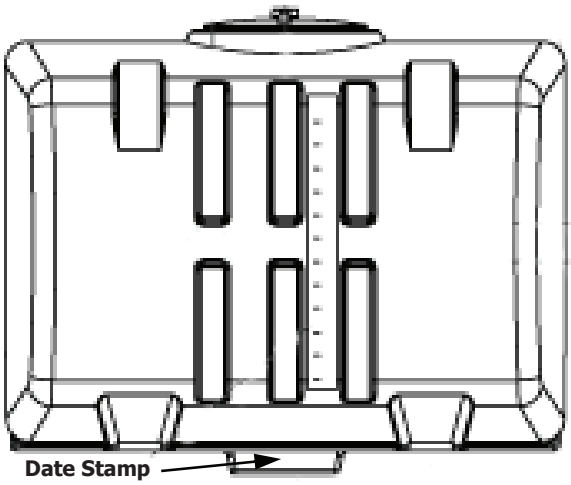

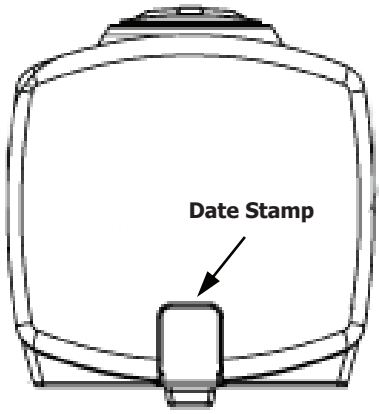

CROP CARE TANKS

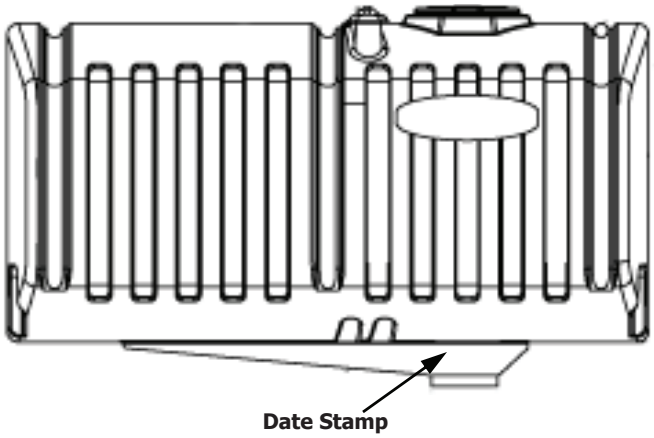

SEPTIC/CISTERN TANKS

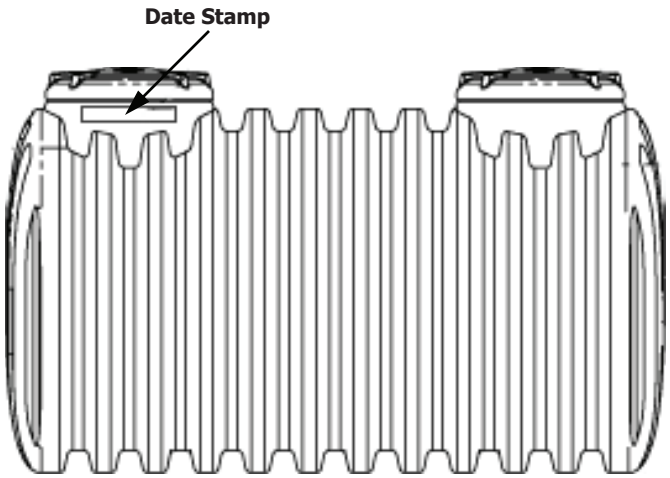

AQUIFER-LOW PROFILE CISTERNS

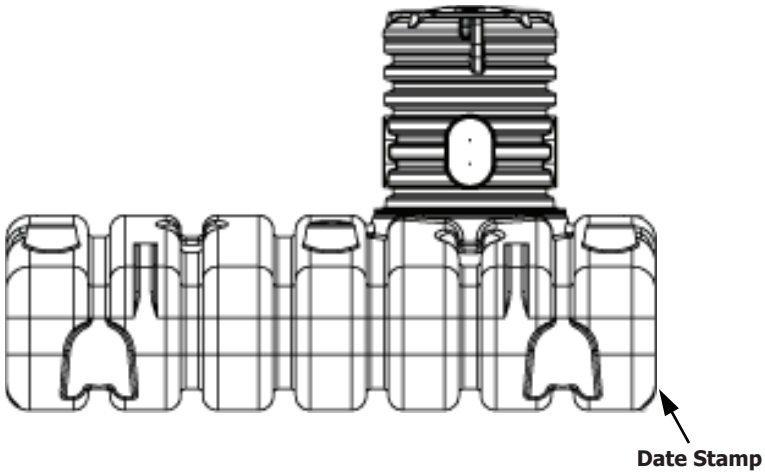

FLOAT DRUMS

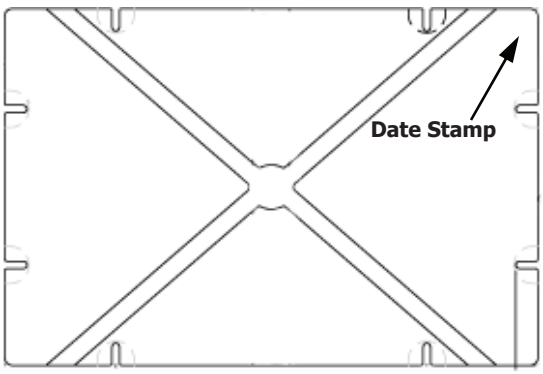

DUALLINE TANKS

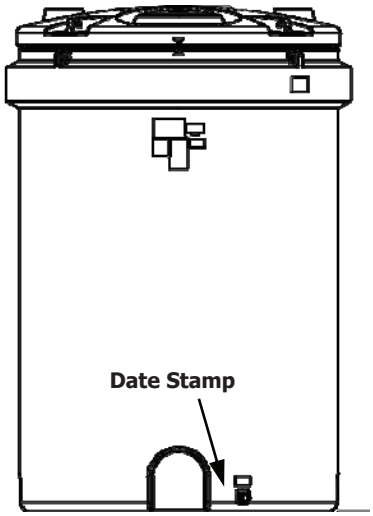

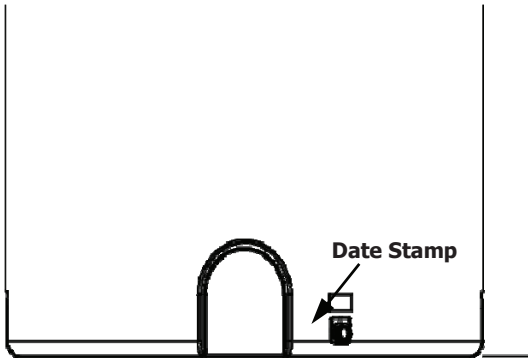

LIL' LUGGER UTILITY CART

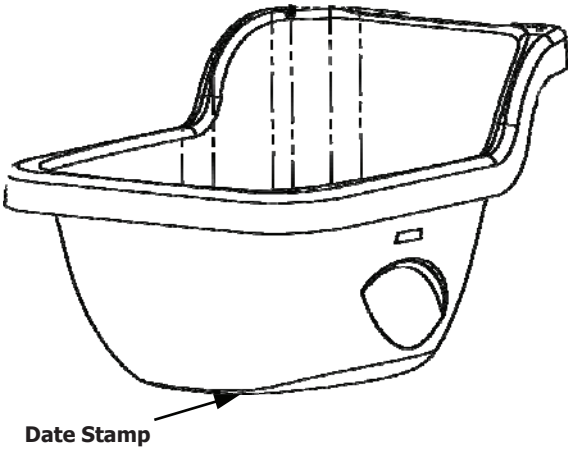

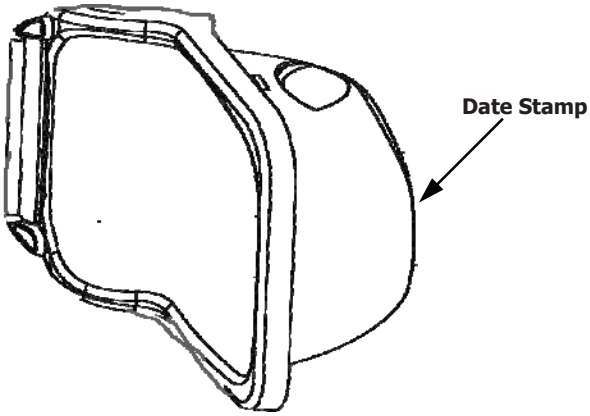

SPECIALTY RINSE TANKS

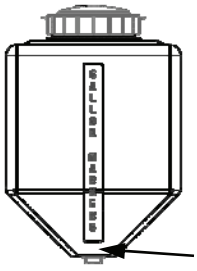

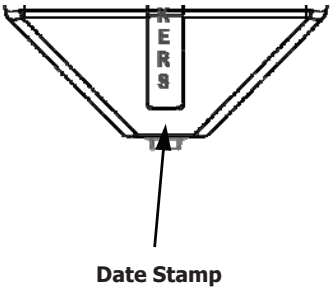

Den Hartog
INDUSTRIES, INC.

Den Hartog Industries, Inc. - Truckload Quantities

Updated 4-08-24

PART NO.	VERTICAL TANKS		WEIGHT	DIMENSIONS	
VT1350-86	1350	Gallon	228	86 x 65	13 tanks fill a rack
VT1500-64	1500	Gallon	335	64 x 115	9 tanks fill a stepdeck
VT1500-86	1500	Gallon	250	86 x 69	12 tanks fill a rack
VT1525-64	1525	Gallon	350	64 x 122	9 tanks fill a rack, with room to spare for some smaller tanks or 5 tanks fill a van or flatbed
VT1650-86	1650	Gallon	276	86 x 74	11 tanks fill a rack
VT2000-64	2000	Gallon	467	64 x 156	7 tanks fill a rack, with room to spare for some smaller tanks or 4 tanks fill a van or flatbed
VT2000-90	2000	Gallon	375	91 x 84	7 tanks fill a flatbed, van or stepdeck
VT2050-86	2050	Gallon	402	86 x 93	7 tanks fill a flatbed, van or stepdeck
VT2150-102	2150	Gallon	417	102 x 71	8 tanks fill a flatbed or stepdeck, with room to spare for some smaller tanks
VT2500-90	2500	Gallon	420	91 x 103	7 tanks fill a flatbed, van or stepdeck
VT2500-96	2500	Gallon	445	96 x 92	7 tanks fill a van or stepdeck
VT3000-90	3000	Gallon	550	91 x 120	6 tanks fill a stepdeck, 5 tanks fill a van or flatbed
VT3000-96	3000	Gallon	582	96 x 109	6 tanks fill a stepdeck
VT3100-102	3100	Gallon	550	102 x 103	6 tanks fill a stepdeck or flatbed, with room to spare for some smaller tanks
VT3400-102	3400	Gallon	585	102 x 107	6 tanks fill a stepdeck, with room to spare for some smaller tanks
VT4000-96	4000	Gallon	900	96 x 140	5 tanks fill a lowboy, with room to spare for some smaller tanks
VT4200-96	4200	Gallon	950	96 x 148	4 tanks fill a lowboy, with room to spare for some smaller tanks
VT4995-142	4995	Gallon	952	142 x 90	6 tanks fill a lowboy, with room to spare for some smaller tanks
VT5000-102	5000	Gallon	1302	102 x 156	4 tanks fill a flatbed or stepdeck
VT5150-102	5150	Gallon	1350	102 x 161	4 tanks fill a flatbed or stepdeck
VT6250-102	6250	Gallon	1550	102 x 194	3 tanks fill a flatbed or stepdeck
VT6500-120	6500	Gallon	1502	120 x 152	3 tanks fill a lowboy or stepdeck, with room to spare for some smaller tanks
VT7000-142	7000	Gallon	1750	142 x 125	4 tanks fill a lowboy, with room to spare for some smaller tanks
VT7800-120	7800	Gallon	1900	120 x 176	3 tanks fill a lowboy, with room to spare for some smaller tanks
VT8000-120	8000	Gallon	1930	120 x 180	3 tanks fill a stepdeck, with room to spare for some smaller tanks
VT9000-142	9000	Gallon	2002	142 X 154	3 tanks fill a lowboy, with room to spare for some smaller tanks
VT9150-120	9150	Gallon	2200	120 x 203	2 tanks fill a stepdeck, with room to spare for some smaller tanks
VT9500-120	9500	Gallon	2352	120 x 213	2 tanks fill a stepdeck, with room to spare for some smaller tanks
VT10500-2500	10500	Gallon	2500	142 x 177	3 tanks fill a lowboy, with room to spare for some smaller tanks
VT10500-2800	10500	Gallon	2800	142 x 177	3 tanks fill a lowboy, with room to spare for some smaller tanks
VT12500-142	12500	Gallon	3402	142 x 208	2 tanks fill a lowboy, with room to spare for some smaller tanks
VT15500-142	15500	Gallon	4002	142 x 247	2 tanks fill a lowboy, with room for some smaller tanks

PART NO.	WATER ONLY TANKS		WEIGHT	DIMENSIONS	
WO2500-VT	2500	Gallon Vertical	392	96 x 92	7 tanks fill a stepdeck
WO3000-VT	3000	Gallon Vertical	487	96 x 109	6 tanks fill a stepdeck

PART NO.	GUSSETED TANKS		WEIGHT	DIMENSIONS	
GV1350-86	1350	Gallon	209	86 x 62	13 tanks fill a rack
GV1500-86	1500	Gallon	230	86 x 69	12 tanks fill a rack
GV1650-86	1650	Gallon	257	86 x 74	11 tanks fill a rack
GV4995-142	4995	Gallon	952	142 x 97	6 tanks fill a lowboy, with room to spare for some smaller tanks
GV7000-142	7000	Gallon	1752	142 x 127	4 tanks fill a lowboy, with room to spare for some smaller tanks
GV10500-2500	10500	Gallon	2502	142 x 179	3 tanks fill a lowboy, with room to spare for some smaller tanks
GV10500-2800	10500	Gallon	2802	142 x 179	3 tanks fill a lowboy, with room to spare for some smaller tanks
GV12500-142	12500	Gallon	3402	142 x 208	2 tanks fill a lowboy, with room to spare for some smaller tanks
GV15500-142	15500	Gallon	4002	142 x 253	2 tanks fill a lowboy, with room to spare for some smaller tanks

PART NO.	FREE STANDING LEG TANKS WITHOUT SU		WEIGHT	DIMENSIONS	
FS1005-48	1005	Gallon	342	48 x 130	23 tanks fill a rack
FS1035-78	1035	Gallon Elliptical	292	78 x 90 x 52	16 tanks fill a rack
FS1065-56W	1065	Gal Hoops Req.	342	56 x 105	10 tanks fill a van or rack
FS1300-DW	1300	Gallon Hoops Req.	427	62 x 114	10 tanks fill a rack
FS1610-78	1610	Gallon ELLIPTICAL*	530	78 x 139 x 56	4 tanks on step deck or van
FS1750-62W	1750	Gal Hoops Req	616	62 x 147	7 tanks fill a rack, 4 tanks fill a flatbed, stepdeck or van
FS1800-2W	1800	Gal Hoops Req.	580	62 x 149	9 tanks fill a rack, 4 assembled fill a flatbed or stepdeck
FS1850-78	1850	Gal Hoops Req. ELLIPTICAL	571	78 x 139 x 63	7 tanks fill a rack, 4 assembled fill a flatbed or stepdeck
FS2350-88	2350	Gal Hoops Req. ELLIPTICAL	920	88 x 146 x 63	7 tanks fill a rack
FS2600-2W	2600	Gal Hoops Req.	850	62 x 212	5 tanks fill a van, stepdeck or flatbed, 3 assembled fill a flatbed or stepdeck
FS2750-88	2750	Gal Hoops Req. ELLIPTICAL	1150	88 x 146 x 70	5 tanks fill a rack, with room to spare for some smaller tanks or 4 tanks fill a flatbed or stepdeck
FS3250-88	3250	Gal Hoops Req. ELLIPTICAL	1208	88 x 146 x 79	4 tanks fill a stepdeck or flatbed
FS3750-88	3750	Gal Hoops Req ELLIPTICAL	1422	88 x 146 x 91	4 tanks fill a stepdeck or flatbed
FS4200-92	4200	Gal Hoops Req. ELLIPTICAL	1648	92 x 195 x 80	3 tanks fill a stepdeck or flatbed
FS4250-88	4250	Gal Hoops Req. Elliptical	1617	88 x 146 x 101	4 tanks fill a stepdeck or flatbed

PART NO.	FREE STANDING LEG TANKS WITH SUMP		WEIGHT	DIMENSIONS	
FM1065-56S	1065	Gal Hoops Req.	342	56 x 105	10 tanks fill a van or rack
FM1300-DS	1300	Gallon Hoops Req.	427	62 x 114	10 tanks fill a rack
FM1610-62	1610	Gal Hoops Req. ELLIPTICAL	530	78 x 139 x 58	4 tanks on step deck or van
FM1750-62S	1750	Gal Hoops Req	616	62 x 147	7 tanks fill a rack, 4 tanks fill a flatbed, stepdeck or van
FM1800-2S	1800	Gal Hoops Req.	580	62 x 149	9 tanks fill a rack, 4 assembled fill a flatbed or stepdeck
FM1850-78	1850	Gal Hoops Req. ELLIPTICAL	571	78 x 139 x 63	7 tanks fill a rack, 4 assembled fill a flatbed or stepdeck
FM2350-88S	2350	Gal Hoops Req. ELLIPTICAL	920	88 x 146 x 63	4 tanks fill a flatbed or stepdeck
FM2600-2S	2600	Gal Hoops Req.	850	62 x 212	5 tanks fill a van, stepdeck or flatbed, 3 assembled fill a flatbed or stepdeck
FM2750-88S	2750	Gal Hoops Req. ELLIPTICAL	1150	88 x 146 x 70	4 tanks fill a flatbed or stepdeck
FM3200-2S	3200	Gal Hoops Req ELLIPTICAL	1100	88 x 172 x 74	5 tanks fill a rack, 3 assembled fill a rack with room to spare for some smaller tanks
FM3250-88S	3250	Gal Hoops Req. ELLIPTICAL	1208	88 x 146 x 79	4 tanks fill a stepdeck or flatbed
FM3750-88S	3750	Gal Hoops Req. Elliptical	1422	88 x 146 x 91	4 tanks fill a stepdeck or flatbed
FM4200-92	4200	Gal Hoops Req. ELLIPTICAL	1648	92 x 195 x 80	3 tanks fill a stepdeck or flatbed
FM4250-88S	4250	Gal Hoops Req. Elliptical	1617	88 x 146 x 101	4 tanks fill a stepdeck or flatbed

PART NO.	ELLIPTICAL TANKS		WEIGHT	DIMENSION	
HE1000-78	1000	Gallon	287	78 x 90 x 49	12 tanks fill a van, 16 tanks fill a rack
HED1000-78	1000	Gallon Deep (8.5") Sump	287	78 x 90 x 49	11 tanks fill a van, 15 tanks fill a rack
HE1250-78	1250	Gallon	402	78 x 92 x 60	10 tanks fill a van
HED1250-78	1250	Gallon Deep (8.5") Sump	402	78 x 92 x 60	10 tanks fill a van
HE1600-78	1600	Gallon	439	78 x 138 x 49	8 tanks fill a stepdeck
HED1600-78	16000	Gallon Deep (8.5") Sump	439	78 x 138 x 49	8 tanks fill a stepdeck

PART NO.	CONE BOTTOM TANKS		WEIGHT	DIMENSION	**load configuration includes equal amount stands
CB1000-64	1000	Gallon-45 deg	252	64 x 98	6 tanks fill a van
CB1000-90	1000	Gallon-15 deg	212	91 X 54	9 tanks fill a flatbed or stepdeck
CB1005-64	1005	Gallon-15 deg	222	64 x 86	10 tanks in a van
CB1150-90	1150	Gallon-15 deg	242	91 x 67	8 tanks on step deck; 7 in a van
CB1200-90	1200	Gallon-15 deg	242	91 X 62	10 tanks fill a van
CB1300-90	1300	Gallon-15 deg	262	91 X 65	7 tanks w/stand fill flatbed or stepdeck
CB1490-64	1490	Gallon-45 deg	340	64 x 132	4 tanks fill a flatbed or stepdeck or 6 tanks fill a rack with room to spare for some smaller tanks
CB1500-96	1500	Gallon-30 deg	252	96 x 80	6 tanks fill a flatbed or stepdeck
CB1550-90	1550	Gallon-30 deg	286	91 X 88	6 tanks w/stand fill flatbed or stepdeck
CB1600-90	1600	Gallon-30 deg	284	91 X 85	7 tanks w/stand fill flatbed or stepdeck
CB1700-86	1700	Gallon-15 deg	284	86 x 85	7 tanks w/stand fill flatbed or stepdeck
CB1750-90	1750	Gallon-15 deg	308	91 x 82	7 tanks in a van
CB2000-96	2000	Gallon-30 deg	292	96 x 96	6 tanks fill a flatbed or stepdeck
CB2450-90	2450	Gallon-15 deg	437	91 X 114	6 tanks w/stand fill low boy, 5 tanks w/stand fill flatbed or stepdeck
CB2495-90	2495	Gallon-30 deg	487	91 X 119	6 tanks w/stand fill low boy, 4 tanks w/stand fill flatbed or stepdeck w/10' remaining
CB2500-90	2500	Gallon-15 deg	435	91 X 111	6 tanks fill a stepdeck, 5 tanks fill a flatbed
CB2550-90	2550	Gallon-30 deg	502	91 X 126	6 tanks w/stand fill low boy, 4 tanks w/stand fill flatbed or stepdeck w/8' remaining
CB2600-90	2600	Gallon-30 deg	500	91 X 123	4 tanks fill a flatbed or stepdeck, will room to spare for some smaller tanks
CB2600-86	2600	Gallon-45 deg	500	86 x 146	4 tanks fill a flatbed or stepdeck
CB3000-90	3000	Gallon-15 deg	550	91 X 128	6 tanks fill a lowboy, 4 tanks fill a flatbed or stepdeck with room to spare for some smaller tanks
CB3000-96	3000	Gallon-30 deg	552	96 x 125	5 tanks fill a lowboy, 4 tanks fill a flatbed or stepdeck with room to spare for some smaller tanks
CB4200-122	4200	Gallon-15 deg	1102	122 x 113	4 tanks fill a stepdeck
CB4600-102	4600	Gallon-15 deg	1200	102 x 155	3 tanks fill a flatbed or stepdeck, with room to spare for some smaller tanks
CB4900-102	4900	Gallon-15 deg	1300	102 x 159	3 tanks fill a flatbed or stepdeck, with room to spare for some smaller tanks
CB6000-122	6000	Gallon-15 deg	1602	122 x 162	3 tanks fill a stepdeck
CB6900-122	6900	Gallon-15 deg	1700	122 x 168	3 tanks fill a stepdeck, with room to spare for some smaller tanks
CB7500-142	7500	Gallon-15 deg	1677	142 x 163	3 tanks fill a lowboy, with room to spare for some smaller tanks
CB8250-122	8250	Gallon-15 deg	2102	122 x 195	2 tanks fill a stepdeck, with room to spare for some smaller tanks
CB10500-142	10500	Gallon-15 deg	2502	142 x 209	2 tanks fill a lowboy, with room to spare for some smaller tanks
CB12500-142	12500	Gallon-15 deg	3402	142 x 239	2 tanks fill a lowboy, with room to spare for some smaller tanks

PART NO.	DOUBLE WALL VERTICAL TANKS		WEIGHT	DIMENSIONS	
DW1000-77	1000	Gallon	552	77 x 82	8 tanks fill a van
DW1500-77	1500	Gallon	673	77 x 119	8 tanks will fill a rack trailer, 8 tanks will fell a stepdeck, 5 tanks will fill a flatbed
DW2000-102	2000	Gallon	907	102 x 97	6 tanks will fill a stepdeck or flatbed
DW2500-102	2500	Gallon	1153	102 x 119	5 tanks will fill a stepdeck or flatbed
DW3000-102	3000	Gallon	1512	102 x 141	4 tanks fill a stepdeck or flatbed
DW3500-102	3500	Gallon	1707	102 x 164	3 tanks fill a stepdeck or flatbed
DW6000-120	6000	Gallon	3001	120 x 191	2 tanks fill a stepdeck with some room for smaller tanks
DW6500-120	6500	Gallon	3202	120 x 207	2 tanks fill a stepdeck with some room for smaller tanks

PART NO.	SEPTIC TANKS		WEIGHT	DIMENSIONS	
AST-0750-1	750	Gallon Single Compartment	259	60 x 70 60	18 tanks fill a rack, with room to spare for some smaller tanks
AST-1000-1	1000	Gallon Single Compartment	390	60 x 101 x 60	18 tanks fill a rack, with room to spare for some smaller tanks
AST-1000-2	1000	Gallon Two Compartments	436	60 x 101 x 60	18 tanks fill a rack, with room to spare for some smaller tanks
AST-1250-1	1250	Gallon Single Compartment	443	58 x 118 x 72	10 tanks fill a rack, with room to spare for smaller tanks or 7 tanks fill a stepdeck
AST-1250-2	1250	Gallon Two Compartments	489	58 x 118 x 72	10 tanks fill a rack, with room to spare for smaller tanks or 7 tanks fill a stepdeck
AST-1500-1	1500	Gallon Single Compartment	528	58 x 137 x 72	10 tanks fill a rack, with room to spare for smaller tanks or 7 tanks fill a stepdeck
AST-1500-2	1500	Gallon Two Compartments	574	58 x 137 x 72	10 tanks fill a rack, with room to spare for smaller tanks or 7 tanks fill a stepdeck

PART NO.	LOW PROFILE SEPTIC TANKS		WEIGHT	DIMENSIONS	
LPS-1000-1	1000	Gallon Low Profile	513	72 x 121 x 58	11 tanks fill a rack, with room to spare for some smaller tanks
LPS-1000-2	1000	Gallon Low Profile 2 Compartment	533	72 x 121 x 58	11 tanks fill a rack, with room to spare for some smaller tanks
LPS-1250-1	1500	Gallon Low Profile	588	72 x 137 x 58	10 tanks fill a rack, with room to spare for some smaller tanks
LPS-1250-2	1500	Gallon Low Profile 2 Compartment	608	72 x 137 x 58	10 tanks fill a rack, with room to spare for some smaller tanks
LPS-1500-1	2000	Gallon Low Profile	694	72 x 153 x 58	9 tanks fill a rack, with room to spare for some smaller tanks
LPS-1500-2	2000	Gallon Low Profile 2 Compartment	714	73 x 153 x 58	9 tanks fill a rack, with room to spare for some smaller tanks

PART NO.	CISTERN TANKS		WEIGHT	DIMENSIONS	
AST-0850-1W	850	Gallon	259	60 x 70 x 60	18 tanks fill a rack, with room to spare for some smaller items
AST-1150-1W	1150	Gallon	414	60 x 101 x 60	18 tanks fill a rack, with room to spare for some smaller items
AST-1450-1W	1450	Gallon	473	58 x 118 x 72	10 tanks fill a rack, with room to spare for some smaller items or 7 tanks fill a stepdeck
AST-1700-1W	1700	Gallon	567	58 x 137 x 72	10 tanks fill a rack, with room to spare for some smaller items or 7 tanks fill a stepdeck

PART NO.	AQUIFER LOW-PROFILE CISTERN TANKS		WEIGHT	DIMENSIONS	
ACT1000-LPB	1000	Gallon w/ Burial Lid	559	98 x 111 x 36	14 tanks fill a stepdeck
ACT1000-LPG	1000	Gallon w/ Ground Access Assembly	595	98 x 111 x 36	14 tanks fill a stepdeck
ACT1500-LPB	1500	Gallon w/ Burial Lid	702	98 x 111 x 48	10 tanks fill a stepdeck
ACT1500-LPG	1500	Gallon w/ Ground Access Assembly	738	98 x 111 x 48	10 tanks fill a stepdeck
ACT2000-LPB	2000	Gallon w/ Burial Lid	917	98 x 158 x 45	7 tanks fill a stepdeck
ACT2000-LPG	2000	Gallon w/ Ground Access Assembly	953	98 x 158 x 45	7 tanks fill a stepdeck
ACT2500-LPB	2500	Gallon w/ Burial Lid	1031	98 x 158 x 54	7 tanks fill a stepdeck
ACT2500-LPG	2500	Gallon w/ Ground Access Assembly	1067	98 x 158 x 54	7 tanks fill a stepdeck

Den Hartog
INDUSTRIES, INC.

PH: 800-342-3408 FAX: 712-752-8222

Updated 4/2024

PART NO.	VERTICAL TANKS - DOME TOP	CLASS	WGT	FSU	SINGLE QNTY	PLT QNTY		MAX PALLET DIMS	PROD DIMS	NOTES
VT0010-12	10 Gallon	150	9	FSU	BOX or SW	1 to 24			12 x 25	
VT0020-16	20 Gallon	250	15	FSU	BOX or SW	3 to 24			16 x 28	
VT0025-18	25 Gallon	250	14	FSU	BOX or SW	3 to 24			18 x 30	
VT0040-18	40 Gallon	250	19	FSU	SW	4 to 15			18 x 43	
VT0055-20	55 Gallon	250	23	FSU	CB	4 to 8			20 x 47	
VT0065-23	65 Gallon	250	27	FSU	CB	4 to 8			23 x 42	
VT0110-32	110 Gallon	300	42	S	CB	4 to 5			32 x 41	
VT0135-23	135 Gallon	300	47	S	CB				23 x 82	
VT0300-42	300 Gallon	300	74		CB				42 x 55	
VT0405-52	405 Gallon	300	92		CB				52 x 48	
VT0425-42	425 Gallon	300	102		CB				42 x 75	
VT0505-46	505 Gallon	300	120		CB				46 x 80	
VT0550-52	550 Gallon	300	118		CB				52 x 66	
VT0600-46	600 Gallon	300	132		CB				46 x 91	
VT0625-64	625 Gallon	400	102		CB				64 x 50	
VT0800-46	800 Gallon	300	177		CB				46 x 118	
VT0900-46	900 Gallon	300	222		CB				46 x 132	
VT1000-64	1000 Gallon	300	252		CB				64 x 81	
VT1050-86	1050 Gallon	400	192		CB				86 x 54	
VT1200-64	1200 Gallon	300	277		CB				64 x 97	
VT1350-86	1350 Gallon	400	230		CB				86 x 65	
VT1500-64	1500 Gallon	300	337		CB				64 x 115	
VT1500-86	1500 Gallon	400	252		CB				86 x 69	
VT1525-64	1525 Gallon	300	352		CB				64 x 122	
VT1650-86	1650 Gallon	400	280		CB				86 x 74	
VT2000-64	2000 Gallon	300	467		CB				64 x 156	
VT2000-90	2000 Gallon	400	377		CB				91 x 84	
VT2050-86	2050 Gallon	300	402		CB				86 x 93	
VT2150-102	2150 Gallon	-	417		CB				102 x 71	
VT2500-90	2500 Gallon	400	422		CB				91 x 103	
VT2500-96	2500 Gallon	-	445		CB				96 x 92	
VT3000-90	3000 Gallon	400	552		CB				91 x 120	
VT3000-96	3000 Gallon	-	582						96 x 109	
VT3100-102	3100 Gallon	-	552						102 x 103	FLAT/STEP
VT3400-102	3400 Gallon	-	587						102 x 107	FLAT/STEP
VT4000-96*	4000 Gallon	-	902						96 x 140	FLAT/STEP
VT4200-96*	4200 Gallon	-	952						96 x 148	FLAT/STEP
VT4995-142*	4995 Gallon	-	952						142 x 90	STEP
VT5000-102*	5000 Gallon	-	1302						102 x 156	FLAT/STEP
VT5150-102*	5150 Gallon	-	1352						102 x 161	FLAT/STEP
VT6250-102*	6250 Gallon	-	1552						102 x 194	FLAT/STEP
VT6500-120*	6500 Gallon	-	1502						120 x 152	FLAT/STEP
VT7000-142*	7000 Gallon	-	1752						142 x 125	FLAT/STEP
VT7800-120*	7800 Gallon	-	1902						120 x 176	FLAT/STEP
VT8000-120*	8000 Gallon	-	1932						120 x 180	FLAT/STEP

PART NO.	VERTICAL TANKS - DOME TOP continued	CLASS	WGT	FSU	SINGLE QNTY	PLT QNTY		MAX PALLET DIMS	PROD DIMS	NOTES
VT9000-142*	9000 Gallon	-	2002						142 x 154	DBL DROP
VT9150-120*	9150 Gallon	-	2202						120 x 203	FLAT/STEP
VT9500-120*	9500 Gallon	-	2352						120 x 213	FLAT/STEP
VT10500-2500*	10500 Gallon	-	2502						142 x 177	DBL DROP
VT10500-2800*	10500 Gallon	-	2802						142 x 177	DBL DROP
VT12500-142*	12500 Gallon	-	3402						142 x 208	DBL DROP
VT15500-142*	15500 Gallon	-	4002						142 x 247	DBL DROP
*INDICATES HEAVY DUTY FITTING										

PART NO.	WATER ONLY TANKS	CLASS	WGT	FSU	SINGLE QNTY			MAX PALLET DIMS	PROD DIMS	NOTES
WO2500-VT*	2500 Gallon Vertical	400	392		CB				96 x 92	
WO3000-VT*	3000 Gallon Vertical		487						96 x 109	
*only for materials 1.0 specific gravity or less										

PART NO.	VERTICAL TANKS - FLAT TOP	CLASS	WGT	FSU	SINGLE QNTY	PLT QNTY		MAX PALLET DIMS	PROD DIMS	NOTES
VT0075-23	75 Gallon	300	30	FSU	CB	4 to 8		50 x 46 x 97 280#	23 x 50	
VT0100-28	100 Gallon	300	38	FSU	CB	4 to 6		56 x 46 x 90 256#	28 x 45	
VT0105-23	105 Gallon	250	40	FSU	CB	4		48 x 46 x 72 192#	23 x 65	
VT0130-32	130 Gallon	300	47	S	CB				32 x 46	
VT0135-28	135 Gallon	300	47	S	CB				28 x 59	
VT0160-28	160 Gallon	300	58		CB				28 x 68	
VT0175-31	175 Gallon	300	56		CB				31 x 61	
VT0180-40	180 Gallon	300	50		CB				40 x 45	
VT0210-40	210 Gallon	300	58		CB				40 x 49	
VT0225-31	225 Gallon	300	67		CB				31 x 76	
VT0265-31	265 Gallon	300	76		CB				31 x 88	
VT0295-42	295 Gallon	300	74		CB				42 x 55	
VT0300-35	300 Gallon	300	88		CB				35 x 81	
VT0420-42	420 Gallon	300	102		CB				42 x 75	
VT0500-46	500 Gallon	300	120		CB				46 x 77	
VT0850-54	850 Gallon	300	184		CB				54 x 94	

PART NO.	VERTICAL STANDS	CLASS	WGT	FSU	SINGLE QNTY	PLT QNTY		MAX PALLET DIMS	PROD DIMS	NOTES
VT28/31-STP	31-1/2" Poly Stand	300	35	FSU	SW	2 to 5			39 x 24	
VT160-28ST	160 Gallon metal stand	150	83		P	1			30 x 26	
VT265-31ST	265 Gallon metal stand	150	89		P	1			33 x 26	
VT300-35ST	300 Gallon metal stand	150	114		P	1			37 x 38	

PART NO.	GUSSETED TANKS	CLASS	WGT	FSU	SINGLE QNTY			MAX PALLET DIMS	PROD DIMS	NOTES
GV1050-86	1050 Gallon	400	177		CB				86 x 50	
GV1350-86	1350 Gallon	400	209		CB				86 x 62	
GV1500-86	1500 Gallon	400	230		CB				86 x 69	
GV1650-86	1650 Gallon	400	257		CB				86 x 74	
GV4995-142	4995 Gallon	-	952						142" x 97"	DBL DROP
GV07000-142	7000 Gallon Gusseted	-	1752						142" x 127"	FLAT/STEP
GV10500-2500	10500 Gallon Gusseted	-	2502						142" x 179"	DBL DROP
GV10500-2800	10500 Gallon Gusseted	-	2802						142" x 179"	DBL DROP
GV12500-142	12500 Gallon Gusseted	-	3402						142" x 208"	DBL DROP
GV155000-142	15500 Gallon Gusseted	-	4002						142" x 253"	DBL DROP

PART NO.	FREE STANDING HORIZONTAL WITHOUT SUMP	CLASS	WGT	FSU	SINGLE QNTY	PLT QNTY		MAX PALLET DIMS	PROD DIMS	NOTES
FS0035-18	35 Gallon	250	16	FSU	BOX	4 to 12		56 x 40 x 81 208#	18 x 34	
FS0055-23	55 Gallon	300	22	FSU	SW	6		48 x 48x 80 182#	23 x 34 x 27	
FS0065-24	65 Gallon	250	33	FSU	SW	4 to 6		48 x 48 x 83 238#	24 x 39	
FS0070-24	70 Gallon Stackable	250	37	FSU	SW	3 to 6		50 x 40 x 95 250#	24 x 39	
FS0125-32	125 Gallon	250	54	S	P	1 to 2		40 x 42x 70 158#	32 x 44	TANK/HOOP/SKID
FS0165-32	165 Gallon	250	72		P	1 to 2		54 x 40 x 69 180#	32 x 54	COMBINATIONS SHIP
FS0225-38	225 Gallon	250	87		P	1 to 2		52 x 42 x 81 210#	38 x 52	ASSEMBLED
FS0325-38	325 Gallon	300	108		P	1 to 2		72 x 42 x 81 252#	38 x 72	
FS0335-44	335 Gallon	300	118		P	1 to 2		56 x 49 x 94 272#	44 x 56	
FS0510-57	510 Gallon Elliptical	300	164		P	1		80 x 40 x 62 202#	57 x 80 x 39	
FS0535-48	535 Gallon	300	162		P	1		48 x 78 x 58 200#	48 x 78	
FS0735-48	735 Gal Hoops Req.	300	252		P	1		103 x 48 x 59 292#	48 x 103	
FS0925-DW	925 Gal Hoops Req.	300	292		P	1		81 x 62 73 335#	62 x 81	
FS1005-48	1005 Gal Hoops Req.	300	342		CP	1		130 x 48 x 61 378#	48 x 130	
FS1035-78	1035 Gal Hoops Req. ELLIPTICAL	300	292		P	1		88 x 78 x 60 332#	78 x 90 x 52	
FS1065-56W	1065 Gal Hoops Req.	300	342		P	1		105 x 56 68 380#	56 x 105	
FS1300-DW	1300 Gal Hoops Req.	300	427		CP	1		114 x 62 x 72 505#	62 x 114	
FS1610-78	1610 Gal Hoops Req. ELLIPTICAL	300	530		CP	1		139 x 50 x 90 629#	78 x 139 x 56	12116 supports
FS1750-62W	1750 Gal Hoops Req.	300	616		CP	1		147 x 62 x 71 620#	62 x 147	
FS1800-2W	1800 Gal Hoops Req.	300	580		P	1			62 x 149	FIGURE AS 2 - 925'S
FS1850-78	1850 Gal Hoops Req. ELLIPTICAL	300	571		CP	1			78 x 139 x 63	FLAT/STEP
FS2350-88	2350 Gal Hoops Req. ELLIPTICAL	-	920						88 x 146 x 63	FLAT/STEP
FS2600-2W	2600 Gal Hoops Req.	-	850						62 x 212	FLAT/STEP
FS2750-88	2750 Gal Hoops Req. ELLIPTICAL	-	1150						88 x 146 x 70	FLAT/STEP
FS3250-88	3250 Gal Hoops Req. ELLIPTICAL	-	1208						88 x 146 x 79	FLAT/STEP
FS3750-88	3750 Gal Hoops Req. ELLIPTICAL	-	1422						88 x 146 x 91	FLAT/STEP
FS4200-92	4200 Gallon ELLIPTICAL	-	1648						92 X 195 X 80	FLAT/STEP
FS4250-88	4250 Gal Hoops Req. ELLIPTICAL	-	1617						88 x 146 x 101	Step Deck
FSxxxx-W = **W**ithout Sump										

PART NO.	FREE STANDING HORIZONTAL WITH SUMP	CLASS	WGT	FSU	SINGLE QNTY	PLT QNTY		MAX PALLET DIMS	PROD DIMS	NOTES
FM0025-16S	25 Gallon	250	15	FSU	BOX	6 to 12		57 x 40 x 65 208#	16 x 34	
FM0925-DS	925 Gal Hoops Req.	300	292		P	1		81 x 62 73 331#	62 x 81	
FM1010-48	1010 Gal Hoops Req.	300	342		CP	1		130 x 60 x 54 420#	48 x 130	
FM1065-56S	1065 Gal Hoops & Skid Req.	300	342		P	1		105 x 65 x 60 380#	56 x 105	
FM1300-DS	1300 Gal Hoops & Skid Req.	300	427		CP	1		114 x 70 x 67 465#	62 x 114	
FM1310-62	1310 Gallon*	300	500					10' - step deck, fb or var	62 x 114 x 67	*IF SHIPPED W/OUT
FM1610-78	1610 Gal Hoops & Skid Req. ELLIPTICAL	300	530		CP & TS1*	1		139 x 50 90 629#	78 x 139 x 58	SKID
FM1750-62S	1750 Gal Hoops & Skid Req.	300	616		CP	1		147 x 70 68 620#	62 x 147	
FM1800-2S	1800 Gal Hoops & Skid Req.	300	580		P	1			62 x 149	FIGURE AS 2 - 925'S
FM1850-78	1850 Gal Hoops & Skid Req.	300	571		CP				78 x 139 x 63	FLAT/STEP
FM2350-88S	2350 Gal Hoops & Skid Req. ELLIPTICAL	-	920		TS2*				88 x 146 x 63	FLAT/STEP
FM2600-2S	2600 Gal Hoops & Skid Req.	-	850						62 x 212	FLAT/STEP
FM2750-88S	2750 Gal Hoops & Skid Req. ELLIPTICAL	-	1150		TS2*				88 x 146 x 70	FLAT/STEP
FM3200-2S	3200 Gal Hoops & Skid Req.	-	1100						88 x 172 x 74	FLAT/STEP - NO VAN
FM3250-88S	3250 Gal Hoops & Skid Req. ELLIPTICAL	-	1208		TS2*				88 x 146 x 79	FLAT/STEP
FM3750-88	3750 Gal Hoops & Skid Req. ELLIPTICAL	-	1422						88 x 146 x 91	FLAT/STEP
FM4200-92	4200 Gallon ELLIPTICAL	-	1648						92 X 195 X 80	FLAT/STEP
FM4250-88	4250 Gal Hoops & Skid Req. ELLIPTICAL	-	1617						88 x 146 x 101	STEP
FMxxxx-S= **S**ump										

PART NO.	HOOPS AND SKIDS	CLASS	WGT	FSU	SINGLE QNTY	PLT QNTY	SETS	MAX PALLET DIMS	PROD DIMS	NOTES
FS048-HP	735 Gal Hoops	60	50		SW		Set of 3		1.315 OD	TANK/HOOP/SKID
FS062-HP-925	925 Gal Hoops	60	47		SW		Set of 2		1.66 OD	COMBINATIONS SHIP
FS062-HP-1300	1300 Gal Hoops	60	71		SW		Set of 3		1.66 OD	ASSEMBLED
FS062-HP-1750	1750 Gal Hoops	60	94		SW		Set of 4		1.66 OD	
FS062-HP-1800C	1800 Gal Hoops	60	94		SW		Set of 4		1.66 OD	
FS062-HP-2600C	2600 Gal Hoops	60	141		SW		Set of 6		1.66 OD	
FS0055-HP	55 Gal Hoops	60	9		SW		Set of 2		1.25 OD	
FS0510-HP	510 Gal Hoops	60	36		SW		Set of 3		1.315 OD	
FS1005-HP	1005 Gal Hoops	60	70		SW		Set of 4		1.315 OD	
FM1010-HP	1010 Gal Hoops	60	56		SW		Set of 4		1.315 OD	
FS1035-HP	1035 Gal Hoops	60	75		SW		Set of 3		1.66 OD	
FS1065-HP	1065 Gal Hoops	60	48		SW		Set of 3		1.315 OD	
FS1610-HP	1610 Gal Hoops w/o sump	60	118		SW	0	Set of 4		1.66 OD	
FM1610-HP	1610 Gal Hoops w/sump	60	112		SW	0	Set of 4		1.66 OD	
FS1850-HP	1850 Gal Hoops w/o sump	60	128		SW	0	Set of 4		1.66 OD	
FM1850-HP	1850 Gal Hoops w/sump	60	120		SW	0	Set of 4		1.66 OD	
FS2350-HP	2350 Gal Hoops	60	116		SW		Set of 4		1.90 OD	
FS2750-HP	2750 Gal Hoops	60	136		SW		Set of 4		1.90 OD	
FM3200-HP	3200 Gal Hoops	60	112		SW		Set of 4		1.66 OD	
FS3250-HP	3250 Gal Hoops	60	140		SW		Set of 4		1.90 OD	
FS3250-LAD	3250 Gal Ladder	70	46		P	1			16 x 78	
FS3750-HP	3750 Gal Hoops	60	400		SW	0	Set of 4		1.90 OD	
FS3750-LAD	3750 Gal Ladder	70	62		P	3			16 x 90	
FS4200-HP-92	4200 Gal Hoops	60	185		SW		Set of 5		1.90 OD	
FS4200-HPF-92	4200 Gal Hoops w/ feet	60	185		SW		Set of 5		1.90 OD	
FS4250-HP	4250 Gal Hoops	60	432		SW	0	Set of 4		1.90 OD	
FS4250-LAD	4250 Gal Ladder	70	68		P	3			16 x 100	
FS0925-SK	925 Gal Skid	150	280						61 x 64	
FM1010-SK	1010 Gal Skid	150	409						53 x 115	
FM1065-SKS	1065 Gal Skid w/sump	150	405						61 x 78	
FS1065-SKW	1065 Gal Skid w/o sump	150	200						59 x 100	
FS1300-SK	1300 Gal Skid	150	450						64 x 104	
FM1310-SKC	1310 Gal Skid Center Sump	150	450						64 x 105	
FM1310-SKE	1310 Gal Skid End Sump	150	450						64 x 100	
FM1610-SKC	1610 or 1850 Gal Skid w/c sump	150	490		CP	3			83 x 107	
FM1610-SKE	1610 or 1850 Gal Skid w/e sump	150	490		CP	3			83 x 112	
FS1610/1850-SK	1610 /1850 Skid	150	750						79 x 134.5	
FS1750-SK	1750 Gal Skid	150	604						64 x 138	
FM1800-SKS	1800 Gal Skid w/ sump	150	580						64 x 125	
FS1800-SKW	1800 Gal Skid w/o sump	150	382						64 x 125	
FM2350/3250-SKC	2350/2750/3250/3750/4250 Gal Skid w/c sump	150	1060						88 x 141	
FM2350/3250-SKE	2350/2750/3250/3750/4250 Gal Skid w/e sump	150	1060						88 x 141	
FS2350/3250-SK	2350/2750/3250/3750/4250 Gal Skid no sump	150	1078						88 x 141	
FS2600-SK	2600 Gal Skid	150	900						64 x 201	
FM3200-SK	3200 Gal Skid	150	1163						90 x 168	
FM4200-SKC	4200 Gal Skid Center Sump		1454						92 x 189	
FM4200-SKE	4200 Gal Skid End Sump		1454						92 x 189	
FS4200-SK	4200 Gal Skid w/o sump		1454						92 x 189	

PART NO.	BAFFLES									
FS1065-BAF	1065	Optional Baffle Kit		38						INSTALLED IN TANK
FS1300-BAF	1300	Optional Baffle Kit		35						
FS1750-BAF	1750	Optional Baffle Kit		70						
FS2600-BAF	2600	Optional Baffle Kit		70						

PART NO.	POWDER-COATED STEEL BANDS W/ J-BOLTS	CLASS	WGT	FSU	SINGLE QNTY			MAX PALLET DIMS	PROD DIMS	NOTES
FS0035-SB*	35 Gallon Kit Silver	60	3	FSU					2 x 45	BANDS ARE USUALLY SHIPPED INSIDE THE TANK.
FS0065-SB*	65 Gallon Kit Silver	60	4	FSU					2 x 61	
FS125/165-SBPJ	125/165 Gallon Kit Black	60	11	FSU					3 x 80	
FS225/325-SBPJ	225/325 Gallon Kit Black	60	13	FSU					3 x 95	
FS0335-SBPJ	335 Gallon Kit Black	60	15	FSU					3 x 110	
FS0535-SBPJ	535 Gallon Kit Black	60	16	FSU					3 x 120	

*FS0035 & FS0065 bands are stainless steel. Stainless is available on other sizes - call for quote

PART NO.	POWDER-COATED STEEL BANDS W/ FEET	CLASS	WGT	FSU	SINGLE QNTY			MAX PALLET DIMS	PROD DIMS	NOTES
FS0035-SBPF	35 Gallon Kit Black	60	8	FSU					2 x 47.5	BANDS ARE USUALLY SHIPPED ON THE TANK.
FS0065-SBPF	65 Gallon Kit Black	60	12	FSU					2 x 67	
FS125/165-SBPF	125/165 Gallon Kit Black	60	16	FSU					2.5 x 84.5	
FS225/325-SBPF	225/325 Gallon Kit Black	60	19	FSU					2.5 x 99.5	
FS0335-SBPF	335 Gallon Kit Black	60	34	FSU					2.75 x 116.5	
FS0535-SBPF	535 Gallon Kit Black	60	36	FSU					2.75 x 125	

PART NO.	ROUND HORIZONTAL TANKS	CLASS	WGT	FSU	SINGLE QNTY	PLT QNTY		MAX PALLET DIMS	PROD DIMS	NOTES
HZ0025-23	25 Gallon	250	16	FSU	SW	4 to 10		46 X 45 X 74 180#	23 x 22	
HZ0055-23	55 Gallon	250	25	FSU	BOX	4 to 7		46 X 40 97 201#	23 x 38	
HZ0075-24	75 Gallon	250	33	FSU	SW	3 to 7		47 X 48 98 257#	24 x 47	
HZ0095-24	95 Gallon	300	37	FSU	SW	3 to 7		56 x 48 98 299#	24 x 56	
HZ0100-23	100 Gallon	250	40	S	SW	3 to 5		64 x 46 74 240#	23 x 64	
HZ0110-30	110 Gallon	300	42	S	SW	3 to 5		60 x 44 x 95 240#	30 x 44	
HZ0150-30	150 Gallon x 30	300	50		SW	3 to 5		60 x 57 x 95 280#	30 x 57	
HZ0150-32	150 Gallon x 32	300	50		SW	3 to 4		64 x 52 x 69 232#	32 x 52	
HZ0200-32	200 Gallon x 32	300	66		SW				32 x 68	
HZ0200-38	200 Gallon x 38	300	66		SW				38 x 51	
HZ0300-38	300 Gallon	300	90		SW				38 x 76	
HZ0400-42	400 Gallon	300	117		SW	1			42 x 76	
HZ0500-48	500 Gallon	300	124		SW				48 x 79	

PART NO.	HORIZONTAL CRADLES	CLASS	WGT	FSU	SINGLE QNTY			MAX PALLET DIMS	PROD DIMS	NOTES
HZ0025-C	25 Gallon	150	18	FSU	BOX				1.5" x 50"	
HZ0055-C	55 Gallon	150	24	FSU	BOX				2" x 50.5"	
HZ0075-C	75 Gallon	150	36	FSU	SW				2" x 51.5"	
HZ0095-C	95 Gallon	150	38	FSU	SW				2" x 51.5"	
HZ0100-C	100 Gallon	150	40	FSU	SW				1.75" x 41.50"	
HZ0110-C	110 Gallon	150	40	FSU	SW				2.75" x 60"	
HZ0153-C	150 Gallon x 30	150	57	FSU	SW				2.75" x 55"	
HZ0150-C	150 Gallon x 32	150	56	FSU	SW				2.75" x 56"	
HZ0232-C	200 Gallon x 32	150	110	FSU	SW				2.75" x 57"	
HZ0238-C	200 Gallon x 38	150	85		SW				2.75" x 65"	
HZ0300-C	300 Gallon	150	145		SW				2.75" x 69.5"	
HZ0400-C	400 Gallon	150	146		SW				2.75" x 76"	
HZ0500-C	500 Gallon	150	170		SW				2.75" x 88"	

HZ cradles usually ship assembled with the tank

PART NO.	ELLIPTICAL TANKS	CLASS	WGT	FSU	SINGLE QNTY	PLT QNTY		MAX PALLET DIMS	PROD DIMS	NOTES
HE0085-36	85 Gallon tank	250	42	FSU	SW	2		47 x 45 x 40	36 x 47 x 21	
HE0200-41	200 Gallon tank	250	84		P	1		58 x 41 x 70 204#	41 x 66 x 26	
HE0300-48	300 Gallon	300	114		P	1		48 x 40 x 75 152#	48 x 70 x 30	

PART NO.	ELLIPTICAL TANKS cont.	CLASS	WGT	FSU	SINGLE QNTY	PLT QNTY		MAX PALLET DIMS	PROD DIMS	NOTES
HE0400-57	400 Gallon	300	129		P	1		57 x 40 x 75 169#	57 x 70 x 36	
HE0500-57	500 Gallon	300	167		P	1		57 x 40 x 87 205#	57 x 82 x 36	
HED0500-57	500 Gallon Deep (8.5") Sump	300	167		P	1		57 x 46 x 87 205#	57 x 82 x 36	
HE0600-64	600 Gallon	300	187		P	1		84 x 64 x 51 478#	64 x 84 x 46	
HE0750-69	750 Gallon	300	222		P	1		70 x 48 x 94 260#	69 x 89 x 42	
HED0750-69	750 Gallon Deep (8.5") Sump	300	222		P	1		70 x 56 x 94 260#	69 x 89 x 42	
HE0850-69	850 Gallon	300	248		P	1		70 x 52 x 93 286#	69 x 89 x 46	
HED0850-69	850 Gallon Deep (8.5") Sump	300	248		P	1		70 x 60 x 93 286#	69 x 89 x 46	
HE1000-78	1000 Gallon	300	287		CP	1		78 x 54 x 96 325#	78 x 90 x 49	
HED1000-78	1000 Gallon Deep (8.5") Sump	300	287		CP	1		78 x 62 x 96 325#	78 x 90 x 49	
HE1000-BAF	1000 Optional Baffle Kit	-	41							Shipped in Tank
HE1250-78	1250 Gallon	300	402		CP	1		78 x 64 x 97 410#	78 x 92 x 60	
HED1250-78	1250 Gallon Deep (8.5") Sump	300	402		CP	1		78 x 72 x 97 410#	78 x 92 x 60	
HE1600-78	1600 Gallon	300	439		CP & TS1 *	1		138 x 50 x 90 629#	78 x 138 x 49	*IF SHIPPED W/O
HED1600-78	1600 Gallon Deep (6") Sump	300	439		CP & TS1 *	1		138 x 54 x 90 629#	78 x 138 x 49	CRADLE

PART NO.	ELLIPTICAL CRADLES	CLASS	WGT	FSU	SINGLE QNTY	PLT QNTY		MAX PALLET DIMS	BANDS	NOTES
HE0085-C	85 Gallon	150	40		P	1			2" x 55	
HE0200-C	200 Gallon	150	140		P	1			3" x 61"	
HE0300-C	300 Gallon	150	155		P	1			3" x 74"	
HE0400-C	400 Gallon	150	190		P	1			4" x 89"	
HE0500-C	500 Gallon	150	202		P	1			4" x 89"	
HE0600-C	600 Gallon	150	243		P	1			4" x 92"	
HE0750-C	750 Gallon	150	405		P	1			4" x 92"	
HE0850-C	850 Gallon	150	408		P	1			4" x 99"	
HE1000-C	1000 Gallon	150	515		P	1			4" x 105"	
HE1250-C	1250 Gallon	150	520		P	1			4" x 126"	
HE1600-C	1600 Gallon	150	578		CP	1			3.5 " x 124"	

PART NO.	CONE BOTTOM TANKS - FLAT TOP	CLASS	WGT	FSU	SINGLE QNTY	PLT QNTY		MAX PALLET DIMS	PROD DIMS	NOTES
CB0150-36	150 Gallon-45 deg	300	63		*				36 x 51	* TANK ONLY SHIP CB
CB0200-42	200 Gallon-45 deg	300	77		*				42 x 55	
CBFD240-42	240 Gallon Full Drain-45 deg	300	77		*				42 x 59	* TANK/STAND SHIP
CB0295-52	295 Gallon-45 deg	300	97		*				52 x 51	SW AS ONE PIECE
CB0345-52	345 Gallon-45 deg	300	102		*				52 x 58	
CB0350-42	350 Gallon-45 deg	300	120		*				42 x 81	
CB0500-52	500 Gallon-45 deg	300	132		*				52 x 81	
CB0750-52	750 Gallon-45 deg	300	171		x				52 x 105	x TANK/STAND SHIP
CB0850-90	850 Gallon-15 deg	400	212		*				91 x 56	AS 2 PCS TANK IS CB
CB1150-90	1150 Gallon-15 deg	400	242		*				91 x 67	
CB1550-90	1550 Gallon-30 deg	400	286		*				91 x 88	
CB2450-90	2450 Gallon-15 deg	400	437		x				91 x 114	
CB2550-90	2550 Gallon-30 deg	400	502		x				91 x 126	

PART NO.	CONE BOTTOM TANKS - DOME TOP	CLASS	WGT	FSU	SINGLE QNTY			MAX PALLET DIMS	PROD DIMS	NOTES
CB0300-42	300 Gallon-45 deg	300	102		*				42 x 67	* TANK ONLY SHIP CB
CB0800-86	800 Gallon-15 deg	400	182		*				86 x 48	
CB1000-64	1000 Gallon-45 deg	300	252		x				64 x 98	
CB1000-90	1000 Gallon-15 deg	400	212		*				91 x 54	* TANK/STAND SHIP
CB1200-90	1200 Gallon-15 deg	400	242		*				91 x 62	SW AS ONE PIECE
CB1300-90	1300 Gallon-15 deg	400	262		*				91 x 65	
CB1490-64	1490 Gallon-45 deg	300	342		x				64 x 132	x TANK/STAND SHIP
CB1500-96	1500 Gallon-30 deg	400	252		x				96 x 80	AS 2 PCS TANK IS CB
CB1600-90	1600 Gallon-30 deg	400	286		x				91 x 85	

PART NO.	CONE BOTTOM TANKS - DOME TOP continued	CLASS	WGT	FSU	SINGLE QNTY			MAX PALLET DIMS	PROD DIMS	NOTES
CB1700-86	1700 Gallon-15 deg	400	286		*				86 x 85	
CB1750-90	1750 Gallon-15 deg	-	308		x				91 x 82	VAN
CB2000-96	2000 Gallon-30 deg	-	292						96 x 96	FLAT/ STEP
CB2495-90	2495 Gallon-30 deg	400	487		x				91 x 119	
CB2500-90	2500 Gallon-15 deg	400	437		x				91 x 111	
CB2600-90	2600 Gallon-30 deg	400	502		x				91 x 123	
CB2600-86	2600 Gallon-45 deg	400	502		x				86 x 146	
CB3000-90	3000 Gallon-15 deg	400	552		x				91 x 128	
CB3000-96	3000 Gallon-30 deg	-	552						96 x 125	FLAT/ STEP
CB4200-122	4200 Gallon-15 deg	-	1102						122 x 113	FLAT/ STEP
CB4600-102	4600 Gallon-15 deg	-	1202						102 x 155	FLAT/ STEP
CB4900-102	4900 Gallon-15 deg	-	1302						102 x 159	FLAT/ STEP
CB6000-122	6000 Gallon-15 deg	-	1602						122 x 150	FLAT/ STEP
CB6900-122	6900 Gallon-15 deg	-	1702						122 x 168	STEP
CB7500-142	7500 Gallon-15 deg		1677						142 x 163	
CB8250-122	8250 Gallon-15 deg	-	2102						122 x 195	STEP
CB8250-122	8250 Gallon-15 deg	-	2102						122 x 195	STEP
CB10500-142	10500 Gallon-15 deg		2502						142 x 209	
CB12500-142	12500 Gallon-15 deg		3402						142 x 239	

PART NO.	CONE BOTTOM STANDS	CLASS	WGT	FSU	SINGLE QNTY	PLT QNTY	CLEARANCE	MAX PALLET DIMS	PROD DIMS	NOTES
CB036-45ST	150 gal-45 deg	150	63			2	12"	40 x 36 71 166#	27 x 29 x 36	
CB042-45ST	200, 300 or 350 gal-45 deg	150	82			2	11"	42 x 42x 73 204#	36 x 36 x 43	
CBFD042-45ST	240 gal-45 deg full drain	150	82			2	10"	42 x 42 x 75 204#	34 x 34 x 42	
CB052-45ST	345 or 500 gal-45 deg	150	174				13"		42 x 42 x 55	
CB064-45ST	1000 or 1490 gal-45 deg	150	320				14"		64 x 64 x 64	
CB086-15ST	800 or 1700 gal-15 deg	150	360				11"		88 x 88 x 23	
CB086-45ST	2600 gal-45 deg	150	580				12"		88 x 88 x 49	
CB090-15ST	850, 1000, 1150, 1200, 1300, 1750, 2450, 2500, 2975 or 3000 gal-15 deg	150	380				11"		93 x 93 x 23	
CB090-30ST	1550, 1600, 2495, 2550 or 2600 gal-30 deg	150	640				9"		95 x 95 x 40	
CB096-30ST	1500, 2000, or 3000 gal 30 deg	150	553				12"		96 x 96 x 38	FLAT/STEP
CB102-15ST	4600 or 4900 gal-15 deg	150	640				11"		105 x 105 x 26	STEP
CB122-15ST	4200, 6000, 6900 or 8250 gal-15 deg	150	1020				10"		122 x 122 x 27	STEP
CB142-15ST	7500, 10500 or 12500 gal-15deg		1858				20"			

PART NO.	CONE BOTTOM TANKS - OPEN TOP	CLASS	WGT	FSU	SINGLE QNTY	PLT QNTY		MAX PALLET DIMS	PROD DIMS	NOTES
OC0840-90	840 Gallon - 15 deg with bolt-on top	400	214		CB				96 x 49	xTANK & STAND SHIP AS 2 PCS, TANK CB
OC1010-64	1010 Gallon - 45 deg with bolt-on top	400	252		x				70 x 99	
OC1050-90	1050 Gallon - 15 deg with bolt-on top	400	242		x				96 x 57	
OC1150-90	1150 Gallon - 15 deg with bolt-on top	400	262		x				96 x 60	
OC1450-90	1450 Gallon - 30 deg with bolt-on top	400	286		x				96 x 80	
OC1500-64	1500 Gallon - 45 deg with bolt-on top	400	342		x				70 x 134	
OC1710-86	1710 Gallon - 15 deg with bolt-on top	400	286		*				91 x 87	*TANK ONLY CB/TANK & STAND SW
OC2350-90	2350 Gallon - 15 deg with bolt-on top	400	437		x				96 x 106	
OC2440-90	2440 Gallon - 30 deg with bolt-on top	400	502		x				96 x 118	
OC2610-86	2610 Gallon - 45 deg with bolt-on top	400	502		x				91 x 147	

PART NO.	CONE BOTTOM TANKS - OPEN TOP STANDS	CLASS	WGT	FSU	SINGLE QNTY	PLT QNTY	CLEARANCE	MAX PALLET DIMS	SHIPPING DIMS	NOTES
CB064-45ST	1010 or 1500 gal-45 deg	150	320				14"		64 x 64 x 64	
CB086-15ST	1710 gal-15 deg	150	360				11"		88 x 88 x 23	
CB086-45ST	2610 gal-45 deg	150	580				12"		88 x 88 x 49	
CB090-15ST	840, 1050,1150, or 2350 gal-15 deg	150	380				11"		93 x 93 x 23	
CB090-30ST	1450 or 2440 gal-30 deg	150	640				9"		95 x 95 x 40	

PART NO.	INDUCTOR TANKS	CLASS	WGT	FSU	SINGLE QNTY	PLT QNTY	MAX/PLT	MAX PALLET DIMS	PROD DIMS	NOTES
INFD7-15	7 Gallon Full Drain	250	8	FSU	Box	24		40 x 48 x 65 232#	15 x 21	pallet dims tank/stand or only tank
INFD10-15	10 Gallon Full Drain	250	10	FSU	Box	20		40 x 48 x 65 230#	15 x 25	
IN0015-19	15 Gallon	250	12	FSU	BOX*	4 to 16 tanks	8 tanks & stan	40 x 48 x 75 232#	19 x 24	
INFD15-19	15 Gallon Full Drain	250	12	FSU	BOX*	4 to 16 tanks	8 tanks & stan	40 x 48 x 75 232#	19 x 27	* TANKS IN STAND SHIPS AS ONE PIECE WITH SW
IN0015-19SM	15 Gallon Side Mount	250	10	FSU	BOX*	4 to 16 tanks	8 tanks & stan	40 x 48 x 75 232#	19 x 24	
IN0030-24	30 Gallon	300	17	FSU	SW*	4 to 12 tanks	8 tanks & stan	48 x 48 x 80 244#	24 x 30	
INFD30-24	30 Gallon Full Drain	300	17	FSU	SW*	4 to 12 tanks	12 tanks & sta	48 x 48 x 86 254#	24 x 33	
INFD40-30	40 Gallon	300	26	FSU	SW*		3 tanks & stai	36 x 40 x 89 134#	30 x 34	
IN0055-24	55 Gallon x 24	300	24	FSU	SW*	4 to 8 tanks	4 tanks & stan	48 x 48 x 90 232#	24 x 42	
INFD55-24	55 Gallon x 24 Full Drain	300	24	FSU	SW*	4 to 8 tanks	*	48 x 48 x 90 232#	24 x 46	
INFD60-30	60 Gallon x 30 Full Drain	300	28	FSU	SW*	4 tanks	*	60 x 40 65 144#	30 x 38	
IN0085-30	85 Gallon	300	37	FSU	SW*	4 tanks	*	60 x 48 x 65 188#	30 x 43	
INFD85-30	85 Gallon Full Drain	300	37	FSU	SW*	4 tanks	*	60 x 48 x 65 188#	30 x 48	
IN0110-30	110 Gallon	300	44	S	SW*	4 tanks	*	60 x 57 x 65 216#	30 x 51	
INFD110-30	110 Gallon	300	44	S	SW*	4 tanks	*	60 x 57 x 65 216#	30 x 56	

PART NO.	BLOW-MOLDED INDUCTOR TANK SETS	CLASS	WGT	FSU	SINGLE QNTY	PLT QNTY		MAX PALLET DIMS	BOX DIMS	NOTES
IBFD10-SET	10 Gallon Full Drain w/ Poly Legs	250	20	FSU	BOX	2 to 10		40 x 48 x 88	19 x 22 x 33	
IBFD15-SET	15 Gallon Full Drain w/ Poly Legs	250	23	FSU	BOX	2 to 10		40 x 48 x 88	19 x 22 x 33	
IBFD20-SET	20 Gallon Full Drain w/ Poly Legs	250	24	FSU	BOX	2 to 10		40 x 48 x 88	19 x 22 x 33	
IBFD35-SET	35 Gallon Full Drain w/ Poly Legs	250	41	FSU	BOX	2 to 8		48 x 48 x 90 430#	25 x 25 x 43	
IBFD60-SET	60 Gallon Full Drain w/ Poly Legs	250	47	FSU	BOX	2 to 6		48 x 55 x 84 370#	25 x 25 x 55	
12695	Leg Anchor Kit for Blow Molded Inductors	70	2	FSU	BOX				6 x 6 x 6	

PART NO.	INDUCTOR STANDS	CLASS	WGT	FSU	SINGLE QNTY	PLT QNTY		MAX PALLET DIMS		NOTES
INFD7/10-ST	7 or 10 Gal	150	12	FSU	BOX	9		51 x 40 x 74 158#		
IN15-ST	15 gal	150	15	FSU	BOX or SW	4 to 11		42 x 42x 75 205#		
INFD15-ST	15 gal (4" taller for Full Drain tank)	150	16	FSU	SW	4 to 11		42 x 42x 83 216#		
IN30/55-ST	30 or 55 (24") gal	150	18	FSU	SW	4 to 11		48 x 48 x 87 238#		
INFD30/55-ST	30 or 55 (24") gal (4" taller for Full Drain tank)	150	19	FSU	SW	4 to 11		48 x 48 x96 238#		
IN40/85-ST	40, 60 (30"), 85 or 110 gal	150	40	FS	SW	5		56 x 40 x 92 240#		
INFD40-ST	40 gal only (designed for UPS shipments)	150	40	FSU	SW					

PART NO.	VERTICAL BATCH TANKS	CLASS	WGT	FSU	SINGLE QNTY	PLT QNTY		MAX PALLET DIMS	SHIP DIMS	NOTES
VT0055-23	55 Gallon	300	26	FSU	CB	6		48 x 40 x 74 196#	27 x 38	
VT0100-23	100 Gallon	300	36		CB	4		50 x 50 x 72 184$	27 x 64	
VT0145-36	145 Gallon	300	52		CB				40 x 40	
VT0200-36	200 Gallon	300	58		CB				40 x 53	
VT0250-36	250 Gallon	300	76		CB				40 x 62	
VT0325-36	325 Gallon	300	92		CB				40 x 81	

PART NO.	VERTICAL BATCH TANKS - OPEN TOP	CLASS	WGT	FSU	SINGLE QNTY	PLT QNTY		MAX PALLET DIMS	SHIP DIMS	NOTES
OP0055-23	55 Gallon	300	26	FSU	CB	6		52 x 40 75 196#	27 x 36	
OP0100-23	100 Gallon	300	36		CB	6		51 x 51 x 70 184#	27 x 62	
OP0145-36	145 Gallon	300	52		CB				40 x 39	
OP0200-36	200 Gallon	300	58		CB				40 x 51	
OP0250-36	250 Gallon	300	76		CB				40 x 61	
OP0325-36	325 Gallon	300	92		CB				40 x 80	

PART NO.	CONE BOTTOM BATCH TANKS	CLASS	WGT	FSU	SINGLE QNTY	PLT QNTY		MAX PALLET DIMS	SHIP DIMS	NOTES
CB0055-23	55 Gallon	300	26	FSU	CB	6		52 x 44 x75 196#	27 x 39	* TANK ONLY SHIP CB
CB0100-23	100 Gallon	300	36		CB	6		63 x 52 x 75 220#	27 x 65	
CB0145-36	145 Gallon	300	52		CB	*			40 x 43	
CB0200-36	200 Gallon	300	58		CB	*			40 x 55	
CB0250-36	250 Gallon	300	76		CB	*			40 x 67	
CB0325-36	325 Gallon	300	92		CB	*			40 x 84	
PART NO.	**CONE BOTTOM BATCH TANKS - OPEN TOP**	**CLASS**	**WGT**	**FSU**	**SINGLE QNTY**	**PLT QNTY**		**MAX PALLET DIMS**	**SHIP DIMS**	**NOTES**
OC0055-23	55 Gallon	300	26	FSU	CB	6		52 x 44 x 75 196#	27 x 37	* TANK ONLY SHIP CB
OC0100-23	100 Gallon	300	36		CB	4		63 x 52 x 75 220#	27 x 63	
OC0145-36	145 Gallon	300	52		CB	*			40 x 41	
OC0200-36	200 Gallon	300	58		CB	*			40 x 53	
OC0250-36	250 Gallon	300	76		CB	*			40 x 65	
OC0325-36	325 Gallon	300	92		CB	*			40 x 82	

PART NO.	BATCH TANKS LIDS & STANDS	CLASS	WGT	FSU	SINGLE QNTY	PLT QNTY	CLEARANCE	MAX PALLET DIMS	PROD DIMS	NOTES
19502	23" Hinged Lid	150	8	FSU	BOX				15 x 8 x 27	
19505	36" Hinged Lid	250	14	FSU	BOX				23 x 8 x 40	
OC023-STP	Poly stand for 23" dia CB&OC	250	45	FSU		4	19"		30 x 28	
19506	23" Vertical Stand Adaptor	150	7	FSU	SW				23 x 5	
OC036-STP	Poly stand for 36" dia CB&OC	250	92			2	19"		44 x 30	
19507	36" Vertical Stand Adaptor	250	15	FSU					36 x 6	
CB023-15ST	55 or 100 gal-15 deg	150	37	FSU	SW	12	13"	48 x 36 x 69 484#	18 x 20 x 24	
CB036-15ST	145, 200, 250 or 325 gal-15 deg	150	84	FSU	SW	4	12"	48 x 42 67 376#	28 x 31 x 26	

PART NO.	CONTAINMENT TANKS - OPEN TOP	CLASS	WGT	FSU	SINGLE QNTY	PLT QNTY		MAX PALLET DIMS	PROD DIMS	NOTES
OP0055-2DC	55 Gal Drum Containment 2 drum	250	70		P	1 to 3			34 x 62 x 26	
OP0100-RT	100 Gallon Rectangle	300	26		SW	6 - 25*		43 x 43 x 70 690#	43 x 43 x 17	
OP0150-RT	150 Gallon Rectangle	300	35		SW	6 - 15*		47 x 60 x 49 530#	47 x 60 x 16	
OP0155-28	155 Gallon	300	45		SW				28 x 65	
OP0200-RT	200 Gallon Rectangle	250	78		SW				66 x 78 x 12	*SHIPPED ON
OP0205-31	205 Gallon	300	54		SW				31 x 70	CUSTOM PALLET
OP0210-RT	210 Gallon Rectangle	300	52		SW	6 - 20*			53 x 65 x 18	WHEN SHIPPED IN
OP0210-40	210 Gallon	300	48		CB				40 x 42	QUANTITIES OF 6 OR
OP0245-31	245 Gallon	300	61		SW				31 x 80	
OP0300-RT	300 Gallon Rectangle	300	82		SW				58 x 95 x 18	
OP0325-RT	325 Gallon Rectangle	300	115		CP	1 to 5		97 x 70 x 65 525#	60 x 96 x 24	
OP0360-48	360 Gallon	300	115		CB				53 x 51	
OP0425-RT	425 Gallon Rectangle	300	94		SW				71 x 69 x 25	
OP0500-56	500 Gallon with bolt-on top	300	150		CB				62 x 65	
OP0625-RT	625 Gallon Rectangle	300	145		CP	1 to 5		109 X 43 X 81 695#	72 x 108 x 24	
OP0635-64	635 Gallon with bolt-on top	400	102		CB				70 x 53	
OP0825-RT	825 Gallon Rectangle	300	276		CB	1 to 3			73 x 73 x 66	
OP0900-86	900 Gallon	400	175		CB				86 x 43	
OP1000-74	1000 Gallon with bolt-on top	300	277		CB				84 x 64	
OP1010-64	1010 Gallon with bolt-on top	300	252		CB	0			70 x 84	
OP1060-86	1060 Gallon with bolt-on top	400	192		CB				91 x 56	
OP1200-86	1200 Gallon	400	200		CB				86 x 54	
OP1210-64	1210 Gallon with bolt-on top	400	277		CB	0			70 x 100	
OP1325-RT	1325 Gallon Rectangle	300	360						84 x 84 x 60	
OP1350-86	1350 Gallon	400	217		CB				86 x 62	
OP1360-86	1360 Gallon with bolt-on top	400	230		CB				91 x 67	
OP1500-86	1500 Gallon	400	240		CB				86 x 68	
OP1505-64	1505 Gallon with bolt-on top	300	337		CB	0			70 x 117	

PART NO.	CONTAINMENT TANKS - OPEN TOP	CLASS	WGT	FSU	SINGLE QNTY	PLT QNTY		MAX PALLET DIMS	PROD DIMS	Notes
OP1510-86	1510 Gallon with bolt-on top	400	252		CB				91 x 71	
OP1660-86	1660 Gallon with bolt-on top	400	280		CB				91 x 76	
OP1700-90	1700 Gallon	300	317		CB				91 x 66	
OP1825-RT	1825 Gallon Rectangle	300	520		CB				96 x 96 x 62	(2) SB if shipped with
OP2000-RT	2000 Gallon Rectangle	300	570						96 x 96 x 68	out lid and tank inside
OP2010-64	2010 Gallon with bolt-on top	300	465		CB	0			70 x 158	(2) BR if shipped with
OP2060-86	2060 Gallon with bolt-on top	400	402		CB				91 x 95	out lid and no tank
OP2200-90	2200 Gallon	400	365		CB				91 x 85	inside
OP2700-90	2700 Gallon	-	480						91 x 103	
OP3300-102	3300 Gallon	-	550		(2) BR or (2) SB*				102 x 105	FLAT/STEP
OP3700-96	3700 Gallon	-	625		(2) BR				98 x 128	FLAT/STEP
OP6800-120	6800 Gallon	-	1525		(2) BR or (2) SB*				122 x 146	FLAT/STEP

PART NO.	DOUBLE WALL VERTICAL TANKS	CLASS	WGT	FSU	SINGLE QNTY	PLT QNTY		MAX PALLET DIMS	SHIPPING DIMS	NOTES
DW0065-28	65 Gallon	250	52		CB				29 x 44	
DW0120-36	120 Gallon	250	81		CB				36 x 50	
DW0150-36	150 Gallon	250	99		CB				36 x 60	
DW0300-57	300 Gallon	250	190		CB				58 x 45	
DW0500-527	500 Gallon	300	264		P	1			58 x 69	
DW1000-77	1000 Gallon	300	552		P	1			77 x 82	
DW1500-77	1500 Gallon	-	673						77 x 119	FLAT/STEP
DW2000-102	2000 Gallon	-	907						102 x 97	FLAT/STEP
DW2500-102	2500 Gallon	-	1153						102 x 119	FLAT/STEP
DW3000-102	3000 Gallon		1512						102 x 141	FLAT/STEP
DW3500-102	3500 Gallon		1707						102 x 164	FLAT/STEP
DW6000-120	6000 Gallon		3001						120 x 191	FLAT/STEP
DW6500-120	6500 Gallon		3202						120 x 207	FLAT/STEP

PART NO.	FUEL TANKS	CLASS	WGT	FSU	SINGLE QNTY	PLT QNTY		MAX PALLET DIMS	PROD DIMS	NOTES
SP0006-FU	6 Gal Fuel XLPE	150	5	FSU	BOX	20 to 80			10 x 15 x 10	
SP0006-FUWB	6 Gal Fuel XLPE w/1/4" brass bulkhead	150	5	FSU	BOX	20 to 80			10 x 15 x 10	
SP0012-FU	12 Gal Fuel XLPE	150	9	FSU	BOX	6 to 24			14 x 18 x 12	
SP0012-FUWB	12 Gal Fuel XLPE w/1/4" brass bulkhead	150	9	FSU	BOX	6 to 24			14 x 18 x 12	

PART NO.	STOCK TANKS	CLASS	WGT	FSU	SINGLE QNTY	PLT QNTY		MAX PALLET DIMS	PROD DIMS	NOTES
ARM-10115	RE124 50 Gallon Oval	300	15	FSU	SW	3 to 15		54 x 40 x 59 265#	55 x 31 x 12	
ARM-10116	RE224 100 Gallon Oval	300	25		SW	3 to 10		55 x 40 x 57 290#	55 x 31 x 25	
ARM-19455	R42 120 Gallon Round	300	30		SW	3 to 10		48 x 48 x 75 340#	48 x 24	
ARM-10117	RE226 150 Gallon Oval	300	46		SW	3 to 10		75 x 40 x 57 500#	76 x 31 x 25	
ARM-10138	R62 320 Gallon Round	400	62		SW	3 to 10		72 x 72 x 75 660#	72 x 24	
ARM-10139	R82 610 Gallon Round	400	92		SW	5/stack			96 x 24	
ARM-10135	R92 920 Gallon Round	400	137		SW	3/stack			106 x 29	SWING DOOR VAN

PART NO.	PICKUP TANKS	CLASS	WGT	FSU	SINGLE QNTY	PLT QNTY		MAX PALLET DIMS	PROD DIMS	NOTES
PU0200-52	200 Gallon	300	56		CB				52 x 30	
SSPU0200-70	200 Gallon Space Saver	250	120		P	1 to 3		70 x 42 x 34 170#	70 x 29 x 42	
PU0205-52	205 Gallon Low Profile	250	87		P	1 to 3		52 x 52 x 83 301#	52 x 52 x 26	
SSPU0300-70	300 Gallon Space Saver	250	174		P	1 to 3		70 x 42 x 46 224#	70 x 41 x 42	
PU0305-60	305 Gallon Low Profile	300	107		P	1 to 3		60 x 60 x95 361#	60 x 58 x 30	
PU0350-62	350 Gallon	300	94		CB				62 x 34	
SSPU0400-70	400 Gallon Space Saver	250	202		P	1		70 x 42 x 57 252#	70 x 52 x 42	
PU0450-62	450 Gallon	300	104		CB				62 x 41	

PART NO.	CROP CARE TANKS*	CLASS	WGT	FSU	SINGLE QNTY	PLT QNTY		MAX PALLET DIMS	PROD DIMS	NOTES
CM0500-48	500 Gal w/ box sump	250	202		P	1			48 x 90 x 38	
CM0750-48	750 Gal w/ box sump	250	262		P	1			48 x 90 x 50	
CC1000-58S	1000 Gal w/ sloped sump	300	345		P	1			58 x 115 x 47	
CC1000-58N	1000 Gal narrow bottom w/ sloped sump	300	345		P	1			58 x 115 x 51	
CM1000-58B	1000 Gal w/ box sump	300	350		P	1			58 x 115 x 47	CC TANKS SHIP ON A RETURNABLE PLASTIC PALLET
CC1250-58S	1250 Gal w/ sloped sump	250	480		P	1			58 x 115 x 57	
CC1250-58N	1250 Gal narrow bottom w/ sloped sump	250	480		P	1			58 x 115 x 61	
CM1250-58B	1250 Gal w/ box sump	250	485		P	1			58 x 115 x 57	
CC1500-58S	1500 Gal w/ sloped sump	250	550		P	1			58 x 115 x 66	
CC1500-58N	1500 Gal narrow bottom w/ sloped sump	250	550		P	1			58 x 115 x 70	
CM1500-58B	1500 Gal w/ box sump	250	550		P	1			58 x 115 x 66	
* Baffles & Rinse Tank included										

PART NO.	CROP CARE HOOPS	CLASS	WGT	FSU	SINGLE QNTY			MAX PALLET DIMS	PROD DIMS	NOTES
CC0500-HPS	500 Gal Hoop (1 HOOP)	60	14		*				1-2/3" pipe	HOOPS SHIP ON A CUSTOM RACK - SINGLE SET ARE SW IF SHIPPED SEPARATE
CC0750-HPS	750 Gal Hoop (1 HOOP)	60	18		*				1-2/3" pipe	
CC1000-HP	1000 Gal Hoops	60	96		*				(3) 2-3/8" pipes	
CC1250-HP	1250 Gal Hoops	60	111		*				(3) 2-3/8" pipes	
CC1500-HP	1500 Gal Hoops	60	205		*				(5) 2-3/8" pipes	

PART NO.	OVAL TANK	CLASS	WGT	FSU	SINGLE QNTY	PLT QNTY		MAX PALLET DIMS	PROD DIMS	NOTES
OT0300-31	300 Gal Oval	250	102		P	1 to 2			31 x 49 x 56	

PART NO.	OVAL CRADLE	CLASS	WGT	FSU	SINGLE QNTY	PLT QNTY		MAX PALLET DIMS	PROD DIMS	NOTES
OT0300-C	300 Gal Oval Cradle	150	140		P	1 to 2			2.5" x 79"	

PART NO.	CUT-A-WAY TANKS	CLASS	WGT	FSU	SINGLE QNTY	PLT QNTY		MAX PALLET DIMS	PROD DIMS	NOTES
CAW0200-24	200 Gallon	250	82		P	1 to 3			24 x 55 x 46	
CAW0250-24	250 Gallon	250	97		P	1 to 3			24 x 61 x 51	

PART NO.	CUT-A-WAY CRADLES	CLASS	WGT	FSU	SINGLE QNTY	PLT QNTY		MAX PALLET DIMS	BANDS	NOTES
CAW0200-C	200 Gallon	150	135		P	2 w/ tank			3 x 60; 3 x 40	
CAW0250-C	250 Gallon	150	143		P	2 w/ tank			3 x 72; 3 x 51	

PART NO.	TEAR DROP TANKS	CLASS	WGT	FSU	SINGLE QNTY	PLT QNTY		MAX PALLET DIMS	PROD DIMS	NOTES
TD0250-36	250 Gal Tear Drop	300	97		P	1 to 2			36 x 52 x 45	
TD0300-36	300 Gal Tear Drop	300	109		P	1 to 2			36 x 62 x 45	

PART NO.	TEAR DROP CRADLES	CLASS	WGT	FSU	SINGLE QNTY	PLT QNTY		MAX PALLET DIMS	BANDS	NOTES
TD0250-C	250 Gal Tear Drop Cradle	150	96		P	1			2.5" x 74.5"	
TD0300-C	300 Gal Tear Drop Cradle	150	108		P	1			2.5" x 74.5"	

PART NO.	UTILITY TANKS - FLAT BOTTOM	CLASS	WGT	FSU	SINGLE QNTY	PLT QNTY		MAX PALLET DIMS	PROD DIMS	NOTES
SP0026-RT	26 Gal Rectangle	250	15	FSU	BOX	5 to 20			18 x 25 x 19	
SP0045-AS	45 Gal Rectangle	250	23	FSU	BOX	2 to 10			18 x 37 x 22	
SP0050-RT	50 Gal Rectangle	250	27	FSU	BOX	2 to 10			19 x 38 x 23	
SP0055-MM	55 Gal Rectangle	250	32	FSU	SW	2 to 10			18 x 18 x 45	
SP0080-RT	80 Gal Rectangle Support Req.	250	42	FSU	SW	2 to 10			18 x 27 x 45	
SP0100-RT	100 Gal Rectangle	250	50	FSU	SW	2 to 6			27 x 43 x 29	
SP0150-RT	150 Gal Rectangle	250	62		P	1 to 4			36 x 48 x 29	
SP0200-RT	200 Gal Rectangle	250	82		P	1 to 2			36 x 48 x 38	

PART NO.	UTILITY TANKS - FLAT BOTTOM continued	CLASS	WGT	FSU	SINGLE QNTY	PLT QNTY		MAX PALLET DIMS	PROD DIMS	NOTES
SP0250-UT	250 Gal Upright Rectangle	250	115		P	1 to 3			29 x 62 x 42	
SP0300-UT	300 Gal Upright Rectangle	250	159		P	1 to 3			29 x 62 x 53	
SP0400-UT	400 Gal Upright Rectangle	250	209		P	1 to 3			29 x 62 x 66	
SP0500-UT	500 Gal Upright Rectangle	250	223		P	1		74 x 40 x 75 273#	31 x 74 x 70	
SP0750-UT	750 Gal Upright Rectangle	250	318		P	1		82 x 40 x 91 368#	82 x 35 x 86	
SP1000-UT	1000 Gal Upright Rectangle	250	407		P	1		92 x 40 x 94 507#	40 x 92 x 89	

PART NO.	RECTANGLE TANKS - TOTAL DRAIN	CLASS	WGT	FSU	SINGLE QNTY	PLT QNTY		MAX PALLET DIMS	PROD DIMS	NOTES
SP0035-RT	35 Gal Rectangle	250	19	FSU	BOX	2 to 8			19 x 28 x 20	
SP0056-RT	56 Gal Rectangle	250	32	FSU	SW	2 to 8			20 x 38 x 26	

PART NO.	LOW-PROFILE RECTANGLE TANKS	CLASS	WGT	FSU	SINGLE QNTY	PLT QNTY		MAX PALLET DIMS	PROD DIMS	NOTES
LP0050-RT	50 Gal Low-Profile Rectangle	150	37	FSU	BOX	2 to 9			24 x 43 x 15	
LP0068-RT	60 Gal Low-Profile Rectangle	250	42	FSU	SW	2 to 9			26 x 42 x 17	
LP0110-RT	110 Gal Low-Profile Rectangle	250	60	FSU	CB	2 to 7			35 x 48 x 19	
LP0200-RT	200 Gal Low-Profile Rectangle	250	84		P	1 to 4			48 x 60 x 19	
LP0300-RT	300 Gal Low-Profile Rectangle	250	135		P	1 to 3			48 x 80 x 21	
LP0300-HT	300 Gal Holding Tank	250	132		CP	2			95 x 56 x 16	

PART NO.	POWDER COATED STEEL BANDS	CLASS	WGT	FSU	SINGLE QNTY			MAX PALLET DIMS	PROD DIMS	NOTES
SP0050-SBP	50 Gallon Rectangle Kit	60	7	FSU	BOX				2 x 545	SHIPPED IN OR ON
SP0080-SBP	80 Gallon Rectangle Support Band	60	21		SW				3 x 93	TANK OR SW IF
SP0100-SBP	100 Gallon Rectangle Kit	60	11		SW				2.25 x 70.5	SHIPPED ALONE
SP0150-SBP	150 Gallon Rectangle Kit	60	14		SW				2.25 x 77.5	
SP0200-SBP	200 Gallon Rectangle Kit	60	16		SW				2.25 x 94	
LP0050-SBP	50 Gallon Low-Profile Band Kit	60	7		SW				2 x 51	
LP0068-SBP	68 Gallon Low-Profile Band Kit	60	7		SW				2 x 58	SHIPPED IN OR ON
LP0110-SBP	110 Gallon Low-Profile Band Kit	60	11		SW				2 x 69	TANK OR SW IF
LP0200-SBP	200 Gallon Low-Profile Band Kit	60	14		SW				2 x 82.5	SHIPPED ALONE
LP0300-SBP	300 Gallon Low-Profile Band Kit	60	16		SW				2 x 86.5	

SPECIALTY TANKS

PART NO.	RINSE TANKS	CLASS	WGT	FSU	SINGLE QNTY	PLT QNTY	BOX QNTY	MAX PALLET DIMS	PROD DIMS	NOTES
SPBM2.5-RT	2.5 Gal Rectangle	150	3.5	FSU	BOX	2 to 8 boxes	12/box		7 x 15 x 14	
SPBM003-RT	3 Gal Rectangle	150	4	FSU	BOX	2 to 8 boxes	12/box		7 x 12 x 14	
SP03.5-CL	3.5 Gal Cylinder	150	5	FSU	BOX	2 to 8 boxes	12/box		11 x 15	
SPBM04-SQ5	4 Gal Square	150	5	FSU	BOX	2 to 8 boxes	10/box		11 x 11 x 15	
SPBM04-SQ7	4 Gal Square	150	5	FSU	BOX	2 to 8 boxes	10/box		11 x 11 x 16	
SPBM04-SQ8	4 Gal Square	150	5	FSU	BOX	2 to 8 boxes	10/box		11 x 11 x 14	
SPBM05-SQ5	5 Gal Square	250	5	FSU	BOX	2 to 8 boxes	8/box		11 x 11 x 20	
SPBM05-SQ7	5 Gal Square	250	5	FSU	BOX	2 to 8 boxes	8/box		11 x 11 x 20	
SPBM05-SQ8	5 Gal Square	250	5	FSU	BOX	2 to 8 boxes	8/box		11 x 11 x 18	
SP0010-SQ8	10 Gal Square	150	10	FSU	BOX	1/2 to 2 boxes	12/box		13 x 13 x 21	
SP0015-SQ5	15 Gal Square	150	16	FSU	BOX	1/2 to 2 boxes	8/box		16 x 16 x23	
SP0015-SQ7	15 Gal Square	150	16	FSU	BOX	1/2 to 2 boxes	8/box		16 x 16 x23	
SP0015-SQ8	15 Gal Square	150	16	FSU	BOX	1/2 to 2 boxes	8/box		16 x 16 x23	

PART NO.	RECTANGLE TANKS - FLAT BOTTOM	CLASS	WGT	FSU	SINGLE QNTY	PLT QNTY	BOX QNTY	MAX PALLET DIMS	PROD DIMS	NOTES
SP002.8-RT	2.8 Gal Rectangle	125	4	FSU	BOX	8	16		9 x 14 x 9	
SP0005-RT	5 Gal Rectangle	150	6	FSU	BOX	2 gaylords	26/gaylord		10 x 22 x 8	
SP0006-2P	6 Gal Rectangle	125	6	FSU	BOX	2 gaylords	24/gaylord		12 x 15 x 8	
SP0006-5N	6 Gal Rectangle	125	6	FSU	BOX	2 gaylords	24/gaylord		12 x 15 x 8	
SP0007-RT	7 Gal Rectangle	125	8	FSU	BOX	1/2 to 2 gaylords	20/gaylord		9 x 14 x 15	
SP0016-MM	16 Gal Rectangle	150	10	FSU	BOX	6 to 24	3/box		14 x 21 x 14	
SP0020-OM	20 Gal Upright Rectangle	150	17	FSU	BOX	6 to 24	-	40 x 48 x 96 450#	11 x 15 x 31	

PART NO.	APPLICATOR TANKS - SUMP ON BOTTOM	CLASS	WGT	FSU	SINGLE QNTY	PLT QNTY		MAX PALLET DIMS	PROD DIMS	NOTES
SP0008-VM	8 Gal Loaf	250	7	FSU	BOX	8 to 30			12 x 16 x 17	
SP0012-RT	12 Gal Rectangle	150	10	FSU	BOX	8 to 24			14 x 18 x 12	
SP0012-VM	12 Gal Loaf	150	10	FSU	BOX	8 to 24			12 x 16 x 22	
SP0019-VM	19 Gal Loaf	150	15	FSU	BOX	8 to 24			12 x 16 x 28	
SP0020-LC	20 Gal Rectangle	150	12	FSU	BOX	8 to 24			14 x 28 x 12	

PART NO.	SPOT SPRAYERS	CLASS	WGT	FSU	SINGLE QNTY	PLT QNTY		MAX PALLET DIMS	PROD DIMS	NOTES
SM0014-14S	14 Gallon with sump	250	8	FSU	BOX	6 to 20			14 x 30 x 14	
SS0014-14	14 Gallon No sump	250	8	FSU	BOX	6 to 20			14 x 30 x 14	
SM0025-18S	25 Gallon with sump	250	14	FSU	BOX	4 to 10			18 x 34 x 18	
SS0025-18	25 Gallon No sump	250	14	FSU	BOX	4 to 10			18 x 34 x 18	
-S = sump										

PART NO.	BLOW-MOLDED APPLICATOR TANKS	CLASS	WGT	FSU	SINGLE QNTY	PLT QNTY		MAX PALLET DIMS	PROD DIMS	NOTES
SB00040SWSS	40 Gallon White single tank	300	18	FSU	BOX				24 x 36 x 19	
SB40WP-DR	40 Gallon White pallet quantity		193			2 to 10		36 x 48 x 96		
SB00040SYSS	40 Gallon Yellow single tank	300	18	FSU	BOX				24 x 36 x 19	
SB40YP-DR	40 Gallon Yellow pallet quantity		193			2 to 10		36 x 48 x 96		
SB00060SWSS	60 Gallon White single tank	300	21	FSU	BOX				24 x 36 x 26	
SB60WP-DR	60 Gallon White pallet quantity		188			2 to 8		36 x 48 x 96		
SB00060SWSS	60 Gallon Yellow single tank	300	21	FSU	BOX				24 x 36 x 26	
SB60WP-DR	60 Gallon Yellow pallet quantity		188			2 to 8		36 x 48 x 96		

PART NO.	PCO TANKS	CLASS	WGT	FSU	SINGLE QNTY	PLT QNTY		MAX PALLET DIMS	PROD DIMS	NOTES
PCO035-16W	35 Gallon	250	26	FSU	BOX	2 to 10			16 x 35 x 21	
PCO050-19S	50 Gallon w/ sump	250	27	FSU	SW	2 to 10			19 x 38 x 23	
PCO050-19W	50 Gallon	250	27	FSU	BOX	2 to 10			19 x 38 x 23	
PCO100-30S	100 Gallon w/ sump	250	52	FSU	SW	2 to 5			30 x 38 x 29	
PCO100-30W	100 Gallon	250	52	FSU	SW	2 to 5			30 x 38 x 29	
PCO150-37S	150 Gallon w/ sump	250	63		P	1 to 4			37 x 48 x 29	
PCO150-37W	150 Gallon	250	63		P	1 to 4			37 x 48 x 29	
PCO200-37S	200 Gallon w/ sump	250	84		P	1 to 2			37 x 48 x 38	
PCO200-37W	200 Gallon	250	84		P	1 to 2			37 x 48 x 38	
PCO300-37S	300 Gallon w/ sump	250	160		P	1 to 2			37 x 69 x 40	
PCO300-37W	300 Gallon	250	160		P	1 to 2			37 x 69 x 40	
S = **S**ump / **W** = **W**ithout Sump										

PART NO.	POWDER COATED STEEL BANDS FOR PCO'S	CLASS	WGT	FSU	SINGLE QNTY			MAX PALLET DIMS	PROD DIMS	NOTES
PC0035-SB*	35 Gallon Set Silver	60	3	FSU	SW				2 x 50.5	SHIPPED IN OR ON TANK OR SW IF SHIPPED ALONE
PC0050-SBP	50 Gallon Set Black	60	6	FSU	SW				2.5 x 57.5	
PC0100-SBP	100 Gallon Set Black	60	20	FSU	SW				2.5 x 76	
PC0150-SBP	150 Gallon Set Black	60	30	FSU	SW				3.5 x 82	
PC0200-SBP	200 Gallon Set Black	60	36	FSU	SW				3.5 x 98	
PC0300-SBP	300 Gallon Set Black	60	40	FSU	SW				4 x 100	
* PC0035-SB is stainless steel										

PART NO.	SEPTIC TANKS	CLASS	WGT	FSU	SINGLE QNTY	PLT QNTY		MAX PALLET DIMS	PROD DIMS	NOTES
AST-0300-1	300 Gallon Pump Tank	300	137		P	1			54 x 56	
AST-0300-1R	300 Gallon Pump Tank	300	137		P	1				
AST-0500-1	500 Gallon Pump Tank	300	197		P	1			63 x 74	
AST-0500-1R	500 Gallon Pump Tank	300	197		P	1				
AST-0750-1	750 Gallon Single Compartment	300	259		P	1			60 x 70 x 60	
AST-0750-1R	750 Gallon Single Compartment	300	259		P	1				

PART NO.	SEPTIC TANKS continued	CLASS	WGT	FSU	SINGLE QNTY	PLT QNTY		MAX PALLET DIMS	PROD DIMS	NOTES
AST-1000-1	1000 Gallon Single Compartment	300	396		P	1			60 x 101 x 60	
AST-1000-2	1000 Gallon Two Compartments	250	448		P	1			60 x 101 x 60	
AST-1250-1	1250 Gallon Single Compartment	300	446		CP	1			58 x 118 x 72	
AST-1250-2	1250 Gallon Two Compartments	300	492		CP	1			58 x 118 x 72	
AST-1500-1	1500 Gallon Single Compartment	300	534		CP	1			58 x 137 x 72	
AST-1500-2	1500 Gallon Two Compartments	300	580		CP	1			58 x 137 x 72	

PART NO.	LOW PROFILE SEPTIC TANKS	CLASS	WGT	FSU	SINGLE QNTY	PLT QNTY		MAX PALLET DIMS	PROD DIMS	NOTES
LPS-1000-1	1000 Gallon Low Profile		513						72 x 121 x 58	Flat / Step
LPS-1000-2	1000 Gallon Low Profile 2 Compartment		533						72 x 121 x 58	Flat / Step
LPS-1250-1	1250 Gallon Low Profile		588						72 x 137 x 58	Flat / Step
LPS-1250-2	1250 Gallon Low Profile 2 Compartment		608						72 x 137 x 58	Flat / Step
LPS-1500-1	1500 Gallon Low Profile		694						72 x 153 x 58	Flat / Step
LPS-1500-2	1500 Gallon Low Profile 2 Compartment		714						72 x 153 x 58	Flat / Step

PART NO.	LOW PROFILE SEPTIC TANKS	CLASS	WGT	FSU	SINGLE QNTY	PLT QNTY		MAX PALLET DIMS	PROD DIMS	NOTES
LPS-14684	36" dia Riser & Lid		69		SW				34 x 45	
ACT-16052BK	28" Aquifer Ground Access Assy-Riser & Lid		53		SW				34 x 38	
ACT-16053BK	24" Aquifer Burial Lid & Gasket BLK		17		SW				35 x 8	
LSP18000-xx	Internal Plumbing Kit				SW					
	xx = State Specific									

PART NO.	CISTERN TANKS	CLASS	WGT	FSU	SINGLE QNTY	PLT QNTY		MAX PALLET DIMS	PROD DIMS	NOTES
AST-0325-1W	325 Gallon	300	134		P	1			54 x 56	
AST-0525-1W	525 Gallon	300	194		P	1			63 x 74	
AST-0850-1W	850 Gallon	300	259		P	1			60 x 70 x 60	
AST-1150-1W	1150 Gallon	300	414		P	1			60 x 101 x 60	
AST-1450-1W	1450 Gallon	300	473		CP	1			58 x 118 x 72	
AST-1700-1W	1700 Gallon	300	567		CP	1			58 x 137 x 72	

PART NO.	SEPTIC/CISTERN TANK ACCESSORIES	CLASS	WGT	FSU	SINGLE QNTY			MAX PALLET DIMS	PROD DIMS	NOTES
AST19365	7" Access Extension -Black	300	13	FSU	SW				32.5 x 13.5	
AST19379	7" Access Extension -White	300	13	FSU	SW				32.5 x 13.5	
AST19212	16" Access Extension -Black	250	35	FSU	SW				32.5 x 22	
AST19214	16" Access Extension -White	250	35	FSU	SW				32.5 x 22	
AST19368	16" Access Extension -Green	250	35	FSU	SW				32.5 x 22	
AST19211	24" Ace Access Cover - Black	250	17	FSU	SW				32.5 x 8	
AST19213	24" Ace Access Cover - White	250	14	FSU	SW				32.5 x 8	
AST19366	24" Ace Access Cover - Green	250	17	FSU	SW				32.5 x 8	
ACT-19486	24" Ace Access Cover - Blue	250	14	FSU	SW				32.5 x 8	
AST19257	8" dia. Riser & Lid - Black	300	20	FSU	SW				32.5 x 29	
AST19258	8" dia. Riser & Lid - White	300	20	FSU	SW				32.5 x 29	
AST19544	24" Septic/Cistern Opening Restrictor	125	4	FSU	BOX				22 x 2	
AST19553	24" Aquifer Opening Restrictor	125	7	FSU	BOX				23 x 23 x 2	
AST10078	4" Sanitary Gasket		1	FSU	BOX				4.00 ID x 8 OD	
AST10084	4" Sch. 40 Gasket		1	FSU	BOX				4.25 ID x 8 OD	
AST19256	4" Gasket Retainer & Hardware		1	FSU						
AST10154	Divider Panel Assembly - for 1000 gal w/Hardware		52							
AST19233	Divider Panel Assembly - for 1250/1500 gal w/Hardware		46							
AST18000-xx	Internal Plumbing Kit									
xx = State Specific										

PART NO.	AQUIFER LOW-PROFILE CISTERN TANKS	CLASS	WGT	FSU	SINGLE QNTY	PLT QNTY		MAX PALLET DIMS	PROD DIMS	NOTES
ACT1000-LPB	1000 Gallon w/ Burial Lid	250	559				*		98 x 111 x 36	Flat / Step
ACT1000-LPG	1000 Gallon w/ Ground Access Assembly	250	595				+		98 x 111 x 36	Flat / Step
ACT1500-LPB	1500 Gallon w/ Burial Lid	250	702				*		98 x 111 x 48	Flat / Step
ACT1500-LPG	1500 Gallon w/ Ground Access Assembly	250	738				+		98 x 111 x 48	Flat / Step
ACT2000-LPB	2000 Gallon w/ Burial Lid	250	917				*		98 x 158 x 45	Flat / Step
ACT2000-LPG	2000 Gallon w/ Ground Access Assembly	250	953				+		98 x 158 x 45	Flat / Step
ACT2500-LPB	2500 Gallon w/ Burial Lid	250	1031				*		98 x 158 x 54	Flat / Step
ACT2500-LPG	2500 Gallon w/ Ground Access Assembly	250	1067				+		98 x 158 x 54	Flat / Step
ACT-16054	16" Aquifer Grnd Access Assy-Riser & Lid	250	43	FSU	P / SW				34 x 24	
ACT-16052	28" Aquifer Grnd Access Assy-Riser & Lid	250	53	S	P / SW				34 x 38	
ACT-16053	24" Aquifer Burial Lid & Gasket	250	17	FSU	SW				35 x 8	

PART NO.	LIQUID FEEDER TANKS & WHEELS	CLASS	WGT	FSU	SINGLE QNTY	PLT QNTY		MAX PALLET DIMS	PROD DIMS	NOTES
LTA155-55	155 Gallon 6 BOLTS FOR LID	300	57		P	1 to 10			50 x 38	
LTA180-68	180 Gallon 8 BOLTS FOR LID	400	75		P	1 to 10			68 x 34	
LTA285-68	285 Gallon 8 BOLTS FOR LID	400	98		P	1 to 10			68 x 39	
LT17W	17 Inch Wheel	-	2	FSU						
LTA180-68 Up to 4 Wheels	4 Bolts per wheel 5/16" x 1"									
LT24W	24 Inch Wheel	-	4	FSU						
LTA155-55 Up to 3 Wheels	2 washers per bolt									
LTA285-68 Up to 4 Wheels	1 nut per bolt									

PART NO.	MISCELLANEOUS	CLASS	WGT	FSU	SINGLE QNTY	PLT QNTY		MAX PALLET DIMS	PROD DIMS	NOTES
MF-10198	100 lb Mineral Feeder	-	91		P	1 to 4	*		72 x 72 x 54	*MINERAL FEEDER
SJ-10183	3.5 Bushel Feed Cart - Standard	125	60	FSU	SW				18 x 40 x 36	WRAPPED AS 2
SJ10232	3.5 Bushel Feed Cart - Deluxe	125	65	FSU	SW				18 x 40 x 36	PIECES ON PALLET

PART NO.	UTILITY CART	CLASS	WGT	FSU	SINGLE QNTY	PLT QNTY		MAX PALLET DIMS	PROD DIMS	NOTES
UC007.5-27	7.5 Cubic Feet Utility Cart	250	54		P	1		28 x 50 x 25	54 x 28 x 34	

PART NO.	PALLET PAKS	CLASS	WGT	FSU	SINGLE QNTY	PLT QNTY		MAX PALLET DIMS	PROD DIMS	NOTES
SP0150-PP	150 1 Tank, Plastic	250	82		SW				26 x 43 x 47	
	1 Pallet, Plastic	125	20		SW					
	1 Frame, Steel	150	101		SW					
SP0150-2TPP	150 2 Tank, Plastic	250	164		SW				50 x 43 x 47	
	1 Pallet, Plastic	100	40		SW					
	1 Frame, Steel	150	156		SW					
SP0300-PP	300 1 Tank, Plastic	250	122		SW				50 x 43 x 47	
	1 Pallet, Plastic	100	40		SW					
	1 Frame, Steel	150	156		SW					
VT0110-PP	110 Gal Pallet & Tank	250	70		CB				33 x 40 x 44	
VT0210-PP	210 Gal Pallet & Tank	300	84		CB				41 x 52	

*PALLET PAKS ARE STACKED 2 HIGH, BANDED & WRAPPED, NO WOOD PALLET

PART NO.	PALLET TANKS	CLASS	WGT	FSU	SINGLE QNTY	PLT QNTY		MAX PALLET DIMS	PROD DIMS	NOTES
SP0150-PPTK	150 Gal Rectangle	250	82		P	1 to 4			24 x 40 x 42	
SP0300-PPTK	300 Gal Rectangle	250	122		P	1 to 2			48 x 40 x 42	
VT0110-32	110 Gal Tank Only	300	42		CB				32 x 41	
VT0210-40	210 Gal Tank Only	300	58		CB				40 x 49	

PART NO.	STACKABLE TOTE	CLASS	WGT	FSU	SINGLE QNTY	PLT QNTY		MAX PALLET DIMS	PROD DIMS	NOTES
ST0035-32	35 Gallon Stackable	250	30	FSU	SW	2 to 7		36 x 40 x 89 250#	32 x 32 x 15	
ST0070-32	70 Gallon Stackable	250	42	FSU	P	1 to 5		48 x 40 x 94 250#	32 x 32 x 25	
ST0120-32	120 Gallon Stackable	250	77	FSU	P	1 to 2		40 x 36 x 78 194#	32 x 32 x 38	
ST0180-42	180 Gallon Stackable	250	126		P	1 to 2		42 x 42 x 73 292#	42 x 42 35	
ST0240-42	240 Gallon Stackable	250	164		P	1 to 2		42 x 42 x 93 368#	42 x 42 x 45	

PART NO.	STACKABLE TOTE ACCESSORIES	CLASS	WGT	FSU	SINGLE QNTY			MAX PALLET DIMS	PROD DIMS	NOTES
ST70/120-SK	35, 70 or 120 Gallon Tote Skid	150	50	FSU	SW				30 x 30 x 8	
ST024-LG	24" Leg Kit fo Leg Kit for Tote Skid	150	24	FSU	BOX				5 x 5 x 26	
ST036-LG	36" Leg Kit for 35, 70 or 120 Gallon Tote Skid	150	70	FSU	BOX				8 x 8 x 41	
19508	42" Tote Adaptor	150	55	FSU	SW				42 x 42 x 10	
ST180/240-ST	180 or 240 Gallton Tote Stand	150	175		SW				44 x 44 x 27	
ST70/120-DT	35, 70 or 120 Gallon Drip Tray Kit	125	15		BOX				5 x 20 x 35	
ST180/240-DT	180 or 240 Gallon Drip Tray Kit	125	17	FSU	BOX				5 x 20 x 46	
ST70/120-PL-1	35, 70 or 120 Gallon Plumbing Kit for single tank	125	1	FSU	BOX				6 x 6 x 6	
ST70/120-PL-2	35, 70 or 120 Gallon Plumbing Kit for two tanks	100	10	FSU	BOX				16 x 10.5 x 9	
ST70/120-PL-3	35, 70 or 120 Gallon Plumbing Kit for three tanks	92.5	12	FSU	BOX				16 x 10.5 x 9	

PART NO.	BULKHEADS & SYPHON TUBES	CLASS	WGT	FSU	SINGLE QNTY				HOLE REQUIREMENT	NOTES
10897	1/4" Brass Bulkhead	-		FSU	BOX				25/32"	
10058	1/2" Ace Bulkhead	-		FSU	BOX				1 1/4"	
10025	1/2" Polypropylene Bulkhead	-		FSU	BOX				1 3/8"	
13208	3/4" Ace Bulkhead	-		FSU	BOX				1 7/16"	
10484	3/4" Ace Heavy Duty Bulkhead	-		FSU	BOX				1 3/4"	
10485	1" Ace Bulkhead	-		FSU	BOX				1 3/4"	
10503	1" Polypropylene Bulkhead	-		FSU	BOX				2 1/4"	
10918	1 1/4" Ace Bulkhead	-		FSU	BOX				2 1/4"	
10507	1 1/2" Ace Bulkhead	-		FSU	BOX				3"	
10508	2" Ace Bulkhead	-		FSU	BOX				3"	
10486	2" SS Bulkhead Dbl Threaded	-		FSU	BOX				3"	
10912	2" Heavy Duty Fitting - for tanks over 3000 gal	-		FSU	BOX				3 1/4"	
10490	2" SS Bulkhead Hvy - for tanks over 3000 gal	-		FSU	BOX				3 1/4"	
10203*	2" SS Bolt-in Bulkhead	-		FSU	BOX				2 1/4"	* $15 ADDITIONAL INSTALLATION FEE APPLIES TO THIS FITTING
10528	3" Ace Bulkhead	-		FSU	BOX				4 1/2"	
10915*	3" Bolt-in Flanged Bulkhead	-		FSU	BOX				3 1/4"	
10487	3" SS Bulkhead Dbl Threaded	-		FSU	BOX				4 1/2"	
10011*	3" SS Bolt-in Bulkhead	-		FSU	BOX				3 3/4"	
11099*	4" SS Bolt-in Bulkhead			FSU	BOX				4 7/8"	
10513	4" Bulkhead Fitting			FSU	BOX				5 3/4"	
10511	2" Syphon Tube	-		FSU	BOX					
10488	2" Long Syphon Tube	-		FSU	BOX					
10489	3" Long Syphon Tube	-		FSU	BOX					
12438	4" Long Syphon Tube	-		FSU	BOX					

PART NO.	LIDS	CLASS	WGT	FSU	SINGLE QNTY				PROD DIMS	NOTES
10631	2" Spin on Kelch Cap	-		FSU	BOX					
13108	3-1/2" Lid & Lanyard Assembly	-		FSU	BOX					
10529	4" Center Lid With Air Breather	-		FSU	BOX					
13696	5" Spin-on Lid with Spring Vent	-		FSU	BOX					
13748	5" Threaded Non-Vented Lid	-		FSU	BOX					
13709	5" Spin-on Lid with Step Vent	-		FSU	BOX					
19406	5" Hinged Low-Profile	-		FSU	BOX					
12415	7" Spin-on Non-Vented Lid	-		FSU	BOX					
12414	7" Spin-on Spring-Vented Lid	-		FSU	BOX					
12427	7" Spin-on Lid w/ Step Vent	-		FSU	BOX					
10525	8" Threaded Vented Lid & Ring	-		FSU	BOX					
10520	- Breather Only - for 8" & 12" Lids			FSU	BOX					
10526	12" Threaded Non-Vented Lid & Ring	-		FSU	BOX					
10527	12" Threaded Vented Lid & Ring			FSU	BOX					

PART NO.	LIDS cont.	CLASS	WGT	FSU	SINGLE QNTY				PROD DIMS	NOTES
10528	16" Threaded Vented Lid & Ring			FSU	BOX					
15082	16" Hinged Lid Vented			FSU	BOX					
15083	16" Hinged Lid Non-Vented			FSU	BOX					
10530	22" Threaded Vented Lid & Ring			FSU	BOX					
10873	12" Short Black Lanyard (for 5", 8" & 12" lids)			FSU	BOX					
12460	12" Self-Anchoring Lanyard (for 5" & 7" lids)			FSU	BOX					
10534	16" Long Black Lanyard (for 12" & 16" lids)			FSU	BOX					
19024	3/4" Outlet Gap			FSU	BOX					
19025	Tether for Outlet Gap			FSU	BOX					
10960	Gasket for Outlet Gap	-		FSU	BOX					

PART NO.	GASKETS	CLASS	WGT	FSU	SINGLE QNTY				PROD DIMS	NOTES
12000	1 3/8" Viton Gasket	-		FSU	BOX				1 3/8"	
12010	1 5/8" Viton Gasket	-		FSU	BOX				1 3/4" or 1 5/8"	
12002	2 1/4" Viton Gasket	-		FSU	BOX				2 1/4"	
12003	3" Viton Gasket	-		FSU	BOX				3"	
12004	3 1/4" Viton Gasket	-		FSU	BOX				3 1/4"	
12005	4 1/2" Viton Gasket	-		FSU	BOX				4 1/2"	

PART NO.	J-BOLTS	CLASS	WGT	FSU	SINGLE QNTY				PROD DIMS	NOTES
J.313 x 3.000	5/16" w/ 3" length	-		FSU	BOX					
J.375 x 3.750	3/8" w/ 3-3/4" length	-		FSU	BOX					
J.375 x 5.000	3/8" w/ 5" length	-		FSU	BOX					
J.500 x 6.000-4	1/2" w/ 6" length			FSU	BOX					
J.625 x 7.000	5/8" w/ 7" length			FSU	BOX					
J.625 x 8.000	5/8" w/ 8" length			FSU	BOX					
J.625 x 8.000-SS	5/8" w/ 8" length (Stainless Steel)			FSU	BOX					

P = WOOD PALLETS DIMENSIONS 40" x 48" x 5" CLASS 70
CP = CUSTOM PALLET $25.00 CHARGE DIMENSIONS VARY BY PRODUCT CLASS 70
CP/PVC = CUSTOM PALLET FOR AQUIFER CISTERN TANKS $69.00
OP0100-RT CP = CUSTOM PALLET CHARGE $14
OP0150-RT CP = CUSTOM PALLET CHARGE $18
OP0210-RT CP = CUSTOM PALLET CHARGE $22
OP0425-RT CP = CUSTOM PALLET CHARGE $27
BR = CROSS BRACES $15.00 DEPOSIT REFUNDABLE IF RETURNED
SB = SHIPPING BLOCKS $40.00 DEPOSIT REFUNDABLE IF RETURNED
SW = SHRINK WRAP
CB= CARD BOARD $0.02/ GALLON
TS1 = TRANSPORT SECTIONS $40.00 REFUNDABLE IF RETURNED 35 lbs
TS2 = TRANSPORT SECTIONS $40.00 REFUNDABLE IF RETURNED 48 lbs

NATIONAL MOTOR FREIGHT CLASSIFICATION

THE ABOVE INFORMATION WAS COMPILED USING THE NATIONAL MOTOR FREIGHT CLASSIFICATION GUIDELINES. FREIGHT CARRIERS OCCASIONALLY USE DIFFERENT CLASSIFICATIONS. CONTACT YOUR SELECTED CARRIER FOR A CONFIRMED CLASSIFICATION.

TANKS (PLASTIC ARTICLES - BASED ON DENSITY)
ITEM 156600, SUB 1, CLASS 400
ITEM 156600, SUB 2, CLASS 300
ITEM 156600, SUB 3 CLASS 250
ITEM 156600, SUB 4, CLASS 150
ITEM 156600, SUB 5, CLASS 125
ITEM 156600, SUB 6, CLASS 100
ITEM 156600, SUB 7, CLASS 92.5
ITEM 156600, SUB 8, CLASS 85
ITEM 156600, SUB 9, CLASS 70

STANDS
ITEM 178680, SUB 1, CLASS 150
ABF: ITEM 178690, SUB___. CLASS___ (BASED ON DENSITY)
HOOPS
ITEM 52460, SUPPORTS (ARCHES), CLASS 60

FEED CART
ITEM 188925, SUB 6, CLASS 125

TANK LADDER
ITEM 108740, SUB 00, CLASS 70
PLUMBING KID (DENSITY ITEM)
ITEM 95190, SUB 6, CLASS 100
ITEM 95190, SUB 7, CLASS 92.5

CHEMICAL RESISTANCE DATA CHART

Chemical Resistance Key:

R - Resistant N - Not Resistant V - Variable Resistance (Contact DHI) U – Unknown

Caution Key:

(P) - Plasticizer (A) - Known Stress Crack Agent

(O) - Oxidizer (B) - Suspected Stress Crack Agent

CHEMICAL	CONCENTRATION	PLASTICS MAX TEMP (°F)		SEAL MATERIALS MAX TEMP (°F)			METALS
		POLYETHYLENE	POLYPROPYLENE	EPDM	NITRILE (BUNA-N)	Santoprene (TPE)	316 SS
Acetaldehyde (A)	100%	70	R	V	R	R	N
Acetic Acid (A)	10%	R	R	R	N	R	A
Acetic Acid (A)	60%	100	R	R	N	R	A
Acetic Annydride (B)		N	73	N	N	R	V
Aluminum Chloride		R	R	R	V	R	N
Aluminum Fluoride		R	R	V	V	R	N
Aluminum Sulfate		R	R	V	V	R	
Alums - all types		R	R	V	V	R	R
Ammonia - dry gas	100%	R	R	R	V	R	R
Ammonium Carbonate		R	R	R	V	R	V
Ammonium Chloride	Sat'd	R	R	R	V	R	V
Ammonium Fluoride	Sat'd	R	R	R	V	R	N
Ammonium Hydroxide	10%	R	R	V	R	R	R
Ammonium Hydroxide	28%	R		V	N	R	R
Ammonium Nitrate	Sat'd	R	R	V	R	R	R
Ammonium Persulfate	Sat'd	R	R	V	N	R	R
Ammonium Sulfate	Sat'd	R	R	R	R	R	V
Ammonium Metaphosphate	Sat'd	R	R	V	R	R	R
Amyl Acetate (BP)	100%	N	N	R	N	R	R
Amyl Alcohol (AP)	100%	R	R	V	V	N	R
Amyl Chloride (P)	100%	N	N	N	N	N	R
Aniline (AP)	100%	N	N	V	N	N	R
Aqua Regia (O)		N	N	N	N	N	V
Arsenic Acid		R	R	V	V	R	R
Aromatic Hydrocarbons (BP)		N	N			R	
Ascorbic acid	10%	R	R			N	

CHEMICAL	CONCENTRATION	PLASTICS MAX TEMP (°F)		SEAL MATERIALS MAX TEMP (°F)			METALS
		POLYETHYLENE	POLYPROPYLENE	EPDM	NITRILE (BUNA-N)	Santoprene (TPE)	316 SS
Barium Carbonate	Sat'd	R	R	V	R	R	R
Barium Chloride	Sat'd	R	R	V	V	R	R
Barium Hydroxide		R	R	V	V	R	R
Barium Sulfate	Sat'd	R	R	V	V	R	R
Barium Sulfide	Sat'd	R	R	V	V	R	R
Beer		R	R	R	V	R	R
Benzene (BP)		N	N	N	N	N	R
Benzoic acid		R	R	N	N	R	R
Bismuth Carbonate	Sat'd	R	R	70	70	R	
Bleach Lye	10%	R	R			R	
Borax	Sat'd	R	R	R	V	R	R
Boric acid		R	R	V	V	R	R
Boron Trifluoride		R	R			N	
Brine		R	R	V	V	R	R
Bromine - liquid (O)		N	N	N	N	R	N
Butanediol (A)	10%	R	R			N	
Butanediol(A)	60%	R	R			N	
Butanediol (A)	100%	R	R			N	
Butter (B)		R	R			R	
Butyl Acetate (BP)	100%	N	N	N	N	N	R
Butyl Alcohol (A)	100%	R	R	V	V	R	R
Butyric Acid - conc. (P)	Conc.	N	R	N	N	N	R
Cadmium Salts		R	R			R	
Calcium Bisulfide		R	R	R	V	N	R
Calcium Carbonate	Sat'd	R	R	V	V	R	R
Calcium Chlorate	Sat'd	R	R	V	V	R	R
Calcium Chloride	Sat'd	R	R	V	V	R	R
Calcium Hydroxide	Conc.	R	R	R	V	R	R
Calcium Hypochlorite - bleach soln.		R	R	V	N	R	V
Calcium Nitrate	50%	R	R	V	V	R	R
Calcium Oxide	Sat'd	R	R	V	V	R	R
Calcium Salts		R	R			R	
Calcium Sulfate		R	R	V	V	R	R
Camphor Oil (BP)		N	73	N	R	R	R
Carbon Dioxide - all conc.		R	R	V	R	R	R

CHEMICAL	CONCENTRATION	PLASTICS MAX TEMP (°F)		SEAL MATERIALS MAX TEMP (°F)			METALS
		POLYETHYLENE	POLYPROPYLENE	EPDM	NITRILE (BUNA-N)	Santoprene (TPE)	316 SS
Carbon Disulphide		N	N	N	N	N	R
Carbon Monoxide		R	R	V	R	R	R
Carbon Tetrachloride (P)		N	N	N	N	N	R
Carbonic Acid		R	R	V	70	R	R
Castor Oil - conc. (A)		R	R		R	R	R
Chlorine - dry gas (O)	100%	N	N	N	N	N	R
Chlorine Liquid (O)		N	N	N	N	N	N
Chlorobenzene (BP)		R	73	N	N	N	R
Chloroform (BP)		N	N	N	N	N	R
Chlorosulfonic Acid	100%	N	N	N	N	N	N
Chromic Acid	10%	R	R	70	N	R	70
Chromic Acid	50%	R	73	N	N	R	V
Cider (A)		R	R			R	
Citric Acid - (A)	Sat'd	R	R			R	R
Coconut Oil Alcohols (A)		R	73	N	R	R	R
Coffee		R	R	V	R	R	R
Cola Concentrates (A)		R	R			R	
Copper Chloride	Sat'd	R	R	V	R	R	R
Copper Cyanide	Sat'd	R	R	V		R	R
Copper Fluoride	2%	R	73	V	80	R	
Copper Nitrate	Sat'd	R	R	V	V	R	R
Copper Sulfate	Sat'd	R	R	V	V	R	R
Corn Oil (A)		R	73	N	R	N	R
Cottonseed Oil (A)		R	R	V	R	R	R
Cresol	100%	N	73		N	R	R
Cuprous Chloride	Sat'd	R	R			R	
Detergents, synthetic (A)		V	V			R	R
Developers. photographic		R	R	V	V	R	R
Dextrin	Sat'd	R	R	R	V	R	R
Dextrose	Sat'd	R	R	R	R	R	R
Diazo Salts		R	R			N	
Dibutyl Phthalate (B)		R	73	V	N	R	R
Dichlorobenzene (BP)		R	N	N	N	N	R
Diethyl Ketone (BP)		N	73	N	N	R	
Diethylene Glycol (A)		R	R			R	

CHEMICAL	CONCENTRATION	PLASTICS MAX TEMP (°F)		SEAL MATERIALS MAX TEMP (°F)			METALS
		POLYETHYLENE	POLYPROPYLENE	EPDM	NITRILE (BUNA-N)	Santoprene (TPE)	316 SS
Diglycolic Acid (A)		R	R	V	V	R	
Dimethylamine		N	73	V	N	R	R
Disodium Phosphate		R	R	V	70	R	R
Emulsions, photographic (A)		R	R	V	V	R	R
Epsom Salts - Magnesium Sulfate		R	R	R	V	R	R
Ethyl Acetate (BP)	100%	R	N	N	N	N	R
Ethyl Alcohol (A)	100%	R	R	R	V	N	R
Ethyl Alcohol (A)	35%	R	R	R	V	N	R
Ethyl Benzene (BP)		N	N	N	N	N	R
Ethyl Chloride (P)		N	N	R	R	N	R
Ethyl Ether (P)		N	N	V	N	N	R
Ethylene Chloride (BP)		N	N	N	N	N	R
Ethylene Glycol (A)		R	R	R	R	R	R
Fatty Acids (A)		R	R	N	V	R	R
Ferric Chloride	Sat'd	R	R	V	V	R	N
Ferric Nitrate	Sat'd	R	R	V	V	R	R
Ferrous Chloride	Sat'd	R	R	R	V	R	N
Ferrous Sulfate		R	R	V	V	R	R
Fish Solubles (A)		R	R	N	R	R	R
Fluoboric Acid		R	R	70	N	R	R
Fluorosilicic Acid - conc.		R	73		N	R	R
Fluosilicic Acid	32%	R	R		N	R	R
Formic Acid - all conc.		R	R	R	N	R	R
Fructose	Sat'd	R	R			R	R
Fruit Pulp (B)		R	R			R	
Furfural (P)	100%	N	N	V	N	R	R
Furfuryl Alcohol (BP)		N	N			R	
Gallic Acid (A)	Sat'd	R	R	N	N	R	R
Gasoline (PB)		N	N	N	R	N	R
Glucose		R	R	V	R	R	R
Glycerine (A)		R	R	V	R	R	R
Glycol (A)		R	R			R	R
Glycolic Acid (A)	30%	R	73	R	V	N	R
Grape Sugar- ag	Sat'd	R	R			R	
Heptane (PB)		N	N	N	R	R	R

CHEMICAL	CONCENTRATION	PLASTICS MAX TEMP (°F)		SEAL MATERIALS MAX TEMP (°F)			METALS
		POLYETHYLENE	POLYPROPYLENE	EPDM	NITRILE (BUNA-N)	Santoprene (TPE)	316 SS
Hexachlorobenzenes		R	R				
Hexanol, Tertiary (A)		R	R	N	R	R	R
Hydrobromic Acid	50%	R	R	R	N	R	N
Hydrochloric Acid - all conc.		R	R	V	V	R	V
Hydrocyanic Acid	Sat'd	R	73	V	V	R	R
Hydrofluoric Acid (A)	30%	R	R	V	N	N	N
Hydrofluoric Acid (A)	50%	R	73	V	N	N	N
Hydrogen	100%	R	R	R	V	R	R
Hydrogen Chloride - dry gas		R	R			R	
Hydrogen Peroxide	30%	R	73	V	N	R	R
Hydrogen Sulfide		R	R	R	N	R	R
Hypochlorous Acid - conc		R	73	104	N	R	
Inks (A)		R	R	V	V	R	R
Iodine in Potassium Sol'n (O)		73	73	V	80	R	N
Lead Acetate	Sat'd	R	R	R	V	R	R
Lead Nitrate		R	R	V	V	N	
Lime		R	73	V	V	R	V
Magnesium Carbonate	Sat'd	R	R	V	R	R	R
Magnesium Chloride	Sat'd	R	R	R	R	R	N
Magnesium Hydroxide	Sat'd	R	R			R	
Magnesium Nitrate	Sat'd	R	R			R	
Magnesium Sulfate	Sat'd	R	R	R	V	R	R
Mercuric Chloride	Sat'd	R	R	V	V	R	N
Mercuric Cyanide	Sat'd	R	R	V	V	R	A
Methyl Alcohol (A)	100%	R	R	V	V	R	R
Methylene Chloride (PB)	100%	N	N	N	N	N	R
Milk		R	R	R	R	R	R
Mineral Oils (P)		70	N	N	R	N	R
Molasses		R	R	V	R	R	R
Naphtha (PA)		N	73	N	V	N	R
Naphthalene (PB)		N	73	N	N	N	R
Nickel Chloride - conc.		R	R	R	R	R	R
Nickel Nitrate	Sat'd	R	R	R	V	R	A
Nickel Sulfate - conc.		R	R	R	R	R	
Nicotine - dilute (A)		R	R		N	N	R

CHEMICAL	CONCENTRATION	PLASTICS MAX TEMP (°F)		SEAL MATERIALS MAX TEMP (°F)			METALS
		POLYETHYLENE	POLYPROPYLENE	EPDM	NITRILE (BUNA-N)	Santoprene (TPE)	316 SS
Nitric Acid (O)	30%	R	R		N	R	R
Nitric Acid (O)	50%	70	N	N	N	R	R
Nitric Acid (O)	70%	70	N	N	N	R	R
Nitric Acid (O)	98%	N	N	N	N	R	R
Nitrobenzene (PB)	100%	N	N	N	N	N	R
Nonyl phenol ethoxylate (B)		N	N			R	
Octane		R	R			N	
Oxalic Acid (A)	Sat'd	R	R			R	
Perchloroethylene (P)		N	N	N	N	N	R
Phosphorous Pentoxide		73	73			R	R
Photographic Solutions		R	R	V	V	R	R
Plating Solutions							
Brass (A)		R	R	70	V	R	
Cadmium (A)		R	R	R	V	R	
Gold (A)		R	R	V	V	R	
Nickel (A)		R	R	V	V	R	R
Silver (A)		R	R	V	V	R	
Tin (A)		R	R	R	V	R	
Zinc (A)		R	R	V	V	R	
Potassium Acetate		R	R			R	
Potasstum Bicarbonate	Sat'd	R	R	R	R	R	R
Potassium Bromate	10%	R	R	R	V	R	R
Potassium Bromide	Sat'd	R	R	R	R	R	R
Potassium Carbonate		R	R	V	R	R	R
Potassium Chlorate	Sat'd	R	R	V	70	R	R
Potassium Chloride	Sat'd	R	R	V	R	R	V
Potassium Chromate	40%	R	R	R	V	R	R
Potassium Cyanide	Sat'd	R	R	V	R	R	R
Potassium Dichromate	40%	R	R	R	R	R	R
Potassium Ferri/Ferro Cyanide	Sat'd	R	R	70	N	N	R
Potassium Fluoride		R	R	R	V	R	R
Potassium Hydroxide	20%	R	R	R	V	R	R
Potassium Hydroxide - conc.		R	R			R	
Potassium Nitrate	Sat'd	R	R	V	V	R	R
Potassium Perchlorate	10%	R	R	R	N	R	

CHEMICAL	CONCENTRATION	PLASTICS MAX TEMP (°F)		SEAL MATERIALS MAX TEMP (°F)			METALS
		POLYETHYLENE	POLYPROPYLENE	EPDM	NITRILE (BUNA-N)	Santoprene (TPE)	316 SS
Potassium Permanganate	20%	R	73	R	N	R	R
Potassium Persulfate	Sat'd	R	R	R	N	N	
Potassium Sulfate - conc		R	R	R	V	N	R
Potassium Sulfide - conc.		R	R	70		N	V
Potassium Sulfite - conc.		R	R	R	V	N	R
Propargyl Alcohol (A)		R	R	R	70	R	
Propyl Alcohol (A)		R	R	V	R	R	R
Propylene Dichloride (PB)	100%	N	N			N	
Propylene Glycol (A)		R	R	R	R	R	R
Pyridine (B)		N	N	N	N	R	V
Rayon Coagulating Bath (B)		R	R				
Resorcinol	Sat'd	R	R				
Salicylic Acid	Sat'd	R	R	R	N	R	R
Selenic kid		R	R	70	N		
Shortening (A)		R	R				
Silver Nitrate Solution		R	R	R	N	R	R
Soap Solution - any conc. (A)		V	R			R	R
Sodium Acetate	Sat'd	R	R	R	N	R	R
Sodium Benzoate	35%	R	R	R	V	R	
Sodium Bicarbonate	Sat'd	R	R	R	V	R	R
Sodium Bisulfate	Sat'd	R	R	V	V	R	R
Sodium Bisulfite	Sat'd	R	R	R	R	R	R
Sodium Bromide	Dilute	R	R	R	N	R	R
Sodium Carbonate - conc		R	R	R	V	R	R
Sodium Chlorate	Sat'd	R	R	V	V	R	R
Sodium Chloride	Sat'd	R	R	V	R	R	V
Sodium Chlorite	30%	R	73	70	N	R	
Sodium Cyanide		R	R	R	V	R	R
Sodium Dichromate	Sat'd	R	R	R	R	R	R
Sodium Ferri/Ferro Cyanide	Sat'd	R	R	R	70	R	R
Sodium Fluoride	Sat'd	R	R	R	100	R	R
Sodium Hydroxide - conc.		R	R	V	V	R	R
Sodium Hydroxide	35%	R	R	V	R	R	R
Sodium Hyrdoxide	50%	R	R	V	R	R	R
Sodium Hypochlorite	12%	R	73	N	N	R	N

CHEMICAL	CONCENTRATION	PLASTICS MAX TEMP (°F)		SEAL MATERIALS MAX TEMP (°F)			METALS
		POLYETHYLENE	POLYPROPYLENE	EPDM	NITRILE (BUNA-N)	Santoprene (TPE)	316 SS
Sodium Hypochlorite	16.5%	R	73	N	N	R	N
Sodium Hypochlorite	>16.5%	R	73	N	N	R	N
Sodium Nitrate		N	R	R	V	R	R
Sodium Sulfate		R	R	V	R	R	R
Sodium Sulfide	Sat'd	R	R	R	V	R	R
Sodium Sulfite	Sat'd	R	R	R	V	R	R
Sodium thiosulphate pentanydrate		R	R	R		N	R
Stannic Chloride	Sat'd	R	R	R	R	R	N
Stannous Chloride	Sat'd	R	R	V	V	R	R
Starch Solution (A)	Sat'd	R	R	R	V	R	R
Stearic Acid (A)	100%	R	73	N	V	R	R
Sulfuric Acid	50%	R	R	R	N	R	R
Sulfuric Acid (O)	70%	R	73	R	N	R	V
Sulfuric Acid (O)	80%	R	73	70	N	R	N
Sulfuric Acid (O)	96%	70	N	70	N	R	N
Sulfuric Acid (O)	98%	N	N	70	N	R	N
Sulfuric Acid - fuming (O)		N	N	N	N	R	N
Sulfurous Acid		R	R	N	N	N	R
Tallow (P)		R	R	N	R	R	R
Tannic Acid (A)	Sat'd	R	73	R	R	R	R
Tartaric Acid	10%	R	R	N	R	R	R
Tetrahydrofuran		N	N	N	N	R	
Titanium Tetrachloride (B)	Sat'd	N	R	N	N	N	V
Toluene (PB)		N	N	N	N	N	R
Transformer Oil		R	73	N	V	N	R
Trichloroethylene (PB)		N	N			N	
Triethylene Glycol (B)		R	R			N	
Trisodium Phosphate	Sat'd	R	R			R	R
Turpentine (P)		N	N			N	
Urea	30%	R	R			R	
Urine		R	R			R	
Vanilla Extract (A)		R	R			R	
Varnish		R	R			N	
Vinegar		R	R			R	
Water (Potable)		R	R	R	R	R	R

CHEMICAL	CONCENTRATION	PLASTICS MAX TEMP (°F)		SEAL MATERIALS MAX TEMP (°F)			METALS
		POLYETHYLENE	POLYPROPYLENE	EPDM	NITRILE (BUNA-N)	Santoprene (TPE)	316 SS
Water (Salt)		R	R	V	V	R	R
Water (Sea)		R	R	V	V	R	V
Water (Swimming Pool)		V	100	73	73	R	
Wetting Agents (A)		V	V			R	
Whiskey (A)		R	R	R	R	R	R
Wines (B)		R	R	R	R	R	R
Xylene (P)		N	N	N	N	N	R
Yeast		R	R			R	
Zinc Bromide	Sat'd	R	R			R	
Zinc Carbonate	Sat'd	R	R	70	70	R	V
Zinc Chloride	Sat'd	R	R	R	V	R	V
Zinc Oxide	Sat'd	R	R			R	
Zinc Stearate		R	R			R	
Zinc Sulfate	Sat'd	R	R	V	V	R	R

The information contained within this chart is based upon data supplied by resin manufacturers and is intended to be a general guide. Note that this data does not encompass all applications or service temperatures. For this reason, Den Hartog Industries, Inc. makes no claim as to the accuracy of this data and recommends that in all cases the final determination of suitability between the chemical(s) to be contained and the polyethylene tank material be verified with the chemical manufacturer(s).

Taxes & Licenses Department
808 W Spokane Falls Blvd
Spokane WA 99201-3336
509-625-6070
taxesandlicenses@spokanecity.org

Business License Exemption Request Form

SMC 8.01.070 states that no person may engage in business in the City or "with the City" without first having obtained a Washington State business license with City of Spokane endorsement.

Spokane Municipal Code allows for business license exemption for certain limited activities. If you think your business is exempt, please fill out this form, sign and submit it to the Taxes and License department. Submissions can be accepted via email or physical mail to the contact information identified above.

Select the exemption(s) that apply:

- ☐ **SMC 08.01.090 -A-** presenters at convention or trade show with limited entry
- ☐ **SMC 08.01.090 -C-** persons or entities operating at locations managed by an airport board
- ☐ **SMC 08.01.090 -D-** where preempted by Federal or state constitution or laws
- ☐ **SMC 08.01.090 -E-** exemption for farmers & gardeners
- ☐ **SMC 08.01.090 -F-** school groups conducting occasional sale from a temporary location
- ☐ **SMC 08.01.090 -G-** The business does not have contracts with the City in any calendar year with an accumulated value exceeding $12,000
  Value of current contract:
- ☒ **SMC 08.01.195 -D-** seller outside of the City delivering goods by means of common carrier
  Goods: Plastic Tanks **Carrier:** Contracted speciality trailer

CERTIFICATION OF BUSINESS ACTIVITIES

I, Tyna Russell hereby do certify to the City of Spokane that the business I represent, known as Go To Plastics DBA Go To Tanks does not conduct nor solicit business activities within the City of Spokane, except for the business activities under the above identified exemptions.

Signature *Tyna Russell* Title Mgr.

Email tyna@gotoplastics.com Phone 425-774-4155

Address 51 west Dayton Street, Suite 201 City, State, Zip UBI# Edmonds, WA 98020 602-255-069

Date 10.28.2026 (Washington State, if available)

For Internal Use Only

Approved ☑ Rejected ☐

If rejected, provide reason:

Reviewed By: [signature] Date: 10/28/26

Rev AUGUST 2026

Approved: Matt Boston
Approved as to form: Elizabeth Schoedel, Asst. City Attorney

Agenda Sheet for City Council:

Committee: PIES **Date:** 11/10/2026

Committee Agenda type: Reports, Contracts & Claims

Council Meeting Date: 12/02/2026

Date Rec'd	10/27/2026		
Clerk's File #	OPR 2026-0933		
Cross Ref #			
Project #			
Submitting Dept	STREET	**Bid #**	RFQ 6576-26
Contact Name/Phone	CLINT HARRIS 625-7744	**Requisition #**	
Contact E-Mail	CEHARRIS@SPOKANECITY.ORG		
Agenda Item Type	Purchase w/o Contract		
Council Sponsor(s)	BWILKERSON KKLITZKE		
Sponsoring at Administrators Request	NO		
Lease? NO	**Grant Related?** NO	**Public Works?** NO	
Agenda Item Name	VALUE BLANKET FOR ELEPHANT ARMOR		

Agenda Wording

Seeking approval for a Value Blanket with Macon Supply, Inc. (Spokane Valley, WA) for the purchase of Elephant Armor as need from 9/1/2026-8/31/2031 at a total cost not to exceed $60,000.

Summary (Background)

Bid RFQ 6576-26 was awarded to Macon Supply, Inc. for the purchase of Elephant Armor as needed over a 5-year period. The 5-year expenditure would not exceed $60,000. This Value Blanket will allow for the purchase of Elephant Armor; a specialized product used to strengthen and repair concrete throughout the City of Spokane.

What impacts would the proposal have on historically excluded communities?

How will data be collected, analyzed, and reported concerning the effect of the program/policy by racial, ethnic, gender identity, national origin, income level, disability, sexual orientation, or other existing disparities?

How will data be collected regarding the effectiveness of this program, policy, or product to ensure it is the right solution?

Describe how this proposal aligns with current City Policies, including the Comprehensive Plan, Sustainability Action Plan, Capital Improvement Program, Neighborhood Master Plans, Council Resolutions, and others?

Council Subcommittee Review

Fiscal Impact	
Approved in Current Year Budget?	YES
Total Cost	**$** 60,000
Current Year Cost	**$**
Subsequent Year(s) Cost	**$**

Narrative

Amount		**Budget Account**
Expense	**$** 60,000	**#** 1100-21900-42500-54201-99999
Select	**$**	**#**
Select	**$**	**#**
Select	**$**	**#**
Select	**$**	**#**
Select	**$**	**#**

Funding Source

Funding Source Type Select

Is this funding source sustainable for future years, months, etc?

Expense Occurrence

Other budget impacts (revenue generating, match requirements, etc.)

Approvals		**Additional Approvals**	
Dept Head	HARRIS, CLINT E.	**PURCHASING**	NECHANICKY, JASON
Division Director	SNYDER, JON		
Accounting Manager	ZOLLINGER, NICHOLAS		
Legal	FAIRBORN, KATHERINE		
For the Mayor	PICCOLO, MIKE		

Distribution List

Marcus Rieper MarcusR@maconsupply.net	ceharris@spokanecity.org
jwthomas@spokanecity.org	kaiumu@spokanecity.org
rrinderle@spokanecity.org	streetaccounting@spokanecity.org

CITY OF SPOKANE Nelson Purchasing Center, 915 N Nelson Street, SPOKANE, WA 99202

PHONE 509 625 6527

RFQ 6576-26 Elephant Armor® DOT Industrial Grade Mortar and Overlay Primer, As-Needed Over Five-Year Period

Multiple awards could be made, to provide the Street Department the flexibility to purchase requirements among awarded Vendors to prevent inundation, and to best meet City's needs.

The combined-total estimated five-year expenditure is $200,000 or less. This is an estimate only and the City of Spokane does not guarantee it. Orders will be placed as needed throughout contract term with a blanket order process. Payment would only be made for actual orders placed, delivered and accepted.

Any Value Blanket(s) resulting from this RFQ will be for a five -year period, beginning approximately September 1, 2026 and terminating August 31, 2031. The Vendor's prices shall be firm throughout the first 12-months, 9/1/2026 to 8/31/2027, with annual pricing adjustments on the anniversary of the award (implied 9/1/20xx) with justification and concurred with by the City.

PRICING ADJUSTMENTS: Pricing adjustments can be requested to take effect on the anniversary of the award with justification. A written request for a price adjustment will be submitted a minimum of thirty (30) calendar days in advance of anniversary of award, or as mutually agreed upon by the by City. Approved price adjustments shall remain unchanged for at least 12 months thereafter. Retroactive price increase adjustments will not be considered.

Quantities are estimates only and are not to be construed as firm or guaranteed. Quantities, when used, are estimates only and are given for the purpose of comparing quotes on a uniform basis. Quantities shall be bid on a more or less basis. Actual usage may be more or less. Orders will be placed as needed throughout Value Blanket Order term with a blanket order process. Payment will only be made for actual quantities ordered, delivered and accepted, whether greater or less than the stated amounts.

Pricing shall be firm throughout the initial base-year, September 1, 2026 through August 31, 2027.

VENDOR		Macon Supply			National Barricade and Sign		
Item Description	Estimated Annual Qty	Unit Price Per 50-Pound Bag	Extended Total	Standard Leadtime in calendar days for delivery after receipt of order(s)	Unit Price Per 50-Pound Bag	Extended Total	Standard Leadtime in calendar days for delivery after receipt of order(s)
Elephant Armor®, GST523BF, 50-Pound Bag, DOT Industrial Grade Mortar. All-Inclusive Unit-Price-Per-Bag shall include all packaging and freight expenses. Unit Pricing shall NOT include tax.	448 (50-pound bags)	**$57.10**	**$25,580.80**	**7 Calendar Days**	**$59.89**	**$26,830.72**	**7 Calendar Days**
State Minimum Quantities of 50 pounds of Elephant Armor® DOT Industrial Grade Mortar, GST523, required to be ordered per an individual order placed.		**40**			**No Minimum**		
Elephant Armor® , GST544G, 1-Gallon Re-Emulsifying Overlay Primer. All-Inclusive Unit Price-Per-Gallon shall include all packaging and freight expenses. Unit Pricing shall NOT include tax.	**64 (1-gallon jugs)**	**$38.00**	**$2,432.00**	7 Calendar Days	National Barricade Advised GST544G is not longer available, so it quoted SGT524G		
Elephant Armor® , GST524G, 1-Gallon. All-Inclusive Unit Price-Per-Gallon shall include all packaging and freight expenses. Unit Pricing shall NOT include tax.	**64 (1-gallon jugs)**				**$47.00**	**$3,008.00**	**7 Calendar Days**
State Minimum Quantities of 1-Gallon Elephant Armor® Re-Emulsifying Overlay Primer, GST544G, required to be ordered per an individual order placed.		**4**			**No Minimum**		
Subtotal		**28,012.80**			**29,838.72**		
Tax 9.1%		**$2,549.16**			**$2,715.32**		
Extended Total Including Tax		**30,561.96**			**32,554.04**		
State the quantity of 50 pounds of Elephant Armor® DOT Industrial Grade Mortar, GST523B, that comprise a pallet		**40**			**56**		
State quantities the quantity of 1-Gallon Elephant Armor® Re-Emulsifying Overlay Primer, GST544G, that comprise a pallet.		**4**			**6 - 8**		
Vendor willing and able to maintain available inventory to deliver at least one (1) pallet of 50 pounds of Elephant Armor® DOT Industrial Grade Mortar, GST523BF, and equivalent 1-Gallon Elephant Armor® Re-Emulsifying Overlay Primer, GST544G, within three (3) business days ARO.		**YES**			**YES**		
To ensure the City needs are meet at any future point(s) in time during the five-year term of resulting five-year blanket order, the City reserves the right to contact awarded Vendor(s) to inquire if Vendor(s) offers additional Elephant Armor® products. Should the Vendor(s) advise it does, it would provide spec's current unit pricing including vendor's unit markup and freight cost. The City would reserve the right to purchase additional Elephant Armor® product(s) from Vendor(s) via this awarded blanket order.		**Agreed**			**Agreed**		

Bid Response Summary

Bid Number	**RFQ 6576-26**
Bid Title	**Elephant Armor® DOT Industrial Grade Mortar and Overlay Primer, As-Needed Over Five-Year Period**
Bid Base Currency	**USD**
Due Date	**Tuesday, July 28, 2026 9:00:00 AM [(UTC-08:00) Pacific Time (US & Canada)]**
Bid Status	**Closed to Bidding**
Company	**marcusr@maconsupply.net**
Submitted By	**marcusr@maconsupply.net marcusr@maconsupply.net - Monday, July 27, 2026 4:35:38 PM [(UTC-08:00) Pacific Time (US & Canada)]** **marcusr@maconsupply.net**
Comments	

Question Responses

Group	Reference Number	Question	Response
ADDENDA			
	1	ADDENDA. Indicated how many Addenda Contractor acknowledges receipt of.	washington
BACKGROUND			
	#1	The City of Spokane Street Department, is initiating this request for quotes to solicit Bids from Vendors who have a proven ability to provide spec'd Elephant Armor® spec'd products, as needed over a five-year period with annual pricing adjustments on the anniversary of the award with justification. No Or-Equals will be accepted due to standardization.	I acknowledge and agree
	#2	Multiple awards could be made, to provide the Street Department the flexibility to purchase requirements among awarded Vendors to prevent inundation, and to best meet City's needs.	I acknowledge and agree
	#3	The combined-total estimated five-year expenditure is $200,000 or less. This is an estimate only and the City of Spokane does not guarantee it. Orders will be placed as needed throughout contract term with a blanket order process. Payment would only be made for actual orders placed, delivered and accepted.	I acknowledge and agree
	#4	Quantities are estimates only and are not to be construed as firm or guaranteed. Quantities, when used, are estimates only and are given for the purpose of comparing quotes on a uniform basis. Quantities shall be bid on a more or less basis. Actual usage may be more or less. Orders will be placed as needed throughout Value Blanket Order term with a blanket order process. Payment will only be made for actual quantities ordered, delivered and accepted, whether greater or less than the stated amounts.	I acknowledge and agree
SUBMISSION OF BIDS			

	#1	Bid Responses shall be submitted electronically through the City of Spokane's bidding portal: https://spokane.procureware.com on or before the Due Date and time mentioned above. Hard, e-mailed or faxed copies and/or late bids shall not be accepted.	Understood and Agreed
	#2	The City of Spokane is not responsible for bids electronically submitted late. It is the responsibility of the Bidder to be sure the bids are electronically submitted sufficiently ahead of time to be received no later than 9AM Pacific Local Time, on the bid due date.	Understood and Agreed
	#3	All communication between the Bidder and the City upon receipt of this bid shall be via the "Clarification Tab" within ProcureWare. Any other communication will be considered unofficial and non-binding on the City.	Understood and Agreed
INTERPRETATION			
	#1	If the Bidder discovers any errors, discrepancies or omissions in the quote specifications, or has any questions about the specifications, the Bidder must notify Purchasing in writing. Any addenda issued by the Purchaser will be incorporated into the resulting Value Blanket Order.	Understood and Agreed
WITHDRAWAL OF BIDS			
	#1	Bidders may withdrawal Quotes prior to the scheduled bid due date and time. Unless otherwise specified, no Quote may be withdrawn for a minimum of sixty (60) calendar days after the bid due date.	Understood and Agreed
EVALUATION OF BIDS			
	#1	Shall be based upon the following criteria, where applicable: A. The price, including sales tax and the effect of discounts. Price may be determined by life cycle costing or total cost quoting, when advantageous to the Purchaser. B. The quality of the items quoted, their conformity to specifications and the purpose for which they are required. C. The Bidder's ability to provide prompt and efficient service and/or delivery. D. The character, integrity, reputation, judgment, experience and efficiency of the Bidder. E. The quality of performance of previous contracts or services. F. The previous and existing compliance by the Bidder with the laws relating to the contract or services. G. Uniformity or interchangeability. H. Any other information having a bearing on the decision to award Value Blanket Order.	Understood and Agreed
BIDDING ERRORS			

	#1	Unit pricing will prevail in the circumstance of unit and extension pricing discrepancies. When, after the opening and tabulation of Bids, a Bidder claims error, and requests to be relieved of award, Bidder will be required to promptly present certified work sheets. The Purchaser will review the work sheets and if the Purchaser is convinced, by clear and convincing evidence, that an honest, mathematically excusable error or critical omission of costs has been made, the Bidder may be relieved of his Bid.	Understood and Agreed
REJECTION OF BIDS			
	#1	The City reserves the right to reject any or all Bids; to waive minor deviations from the specifications, to waive any informality in Bids received, whenever it is in the City's best interest, and to accept or reject all or part of this Bid at prices shown.	Understood and Agreed
AWARD OF VALUE BLANKET ORDER			
	#1	Award of Value Blanket(s), when made, will be to the Bidder(s) whose Bid is the most favorable to the Purchaser, taking into consideration price and the other evaluation factors. INTERLOCAL AND STATE CONTRACTS WHERE APPLICABLE WILL BE CONSIDERED AS A BID. Unsuccessful Bidders will not automatically be notified of Bid results.	Understood and Agreed
MULTIPLE AWARDS			
	#1	More than one Value Blanket Order may be awarded. Awards, when and if made, will be to the Bidders whose bids are the most favorable to the City. Resulting value blankets are optional (non-exclusive) use. The City Council shall make the award of Value Blanket(s).	Understood and Agreed
PAYMENT TERMS			
	#1	Net 30 (unless otherwise agreed to). Payment shall be made via direct deposit/ACH (unless otherwise agreed to) after receipt of the goods ordered. A completed ACH application is required before a City order will be issued. If the City objects to all or any portion of an invoice, it shall notify the vendor and reserve the right to pay only that portion of the invoice not in dispute. In that event, all parties shall immediately make every effort to settle the disputed amount.	Understood and Agreed
INVOICING			

	#1	Invoices must be submitted within 30 days of any delivery. • All Invoices shall include Value Blanket Number, Item Types Delivered, Unit Pricing per resulting Value Blanket. • Payment of invoices shall be contingent upon receipt of sufficient detail to permit identification of delivered items, and compliance with Value Blanket. Original invoices are required and shall not be approved for payment until all required support is provided. Invoices shall be emailed to applicable department: Street Department: erasc@spokanecity.org.	Understood and Agreed
TERMS AND CONDITIONS			
	#1	Bidder acknowledges that they have read and understand the Terms and Conditions Document in the "Documents" tab. If selected response is: "I do not acknowledge and do not agree", include requested exception on separate page and title as "Exception to Terms and Conditions", and upload in response #1.1 below. The City will consider and determine if exception will be accepted.	I acknowledge and agree
	#1.1	EXCEPTIONS: To Terms and Conditions, if you took exception above, upload here.	
	#2	ELIGIBILITY FOR CITY CONTRACTS: Section 18.09.050 of the Spokane Municipal Code states that the recipient of a City contract, award or purchase order shall certify that it is not knowingly or intentionally a nuclear weapons producer. The Bidder certifies that his/her firm is not a nuclear weapons producer.	I Certify
Polychlorinated Biphenyls (PCBs)			
	#1	In accordance with SMC 7.06.172(A), respondent certifies the products quoted and to be supplied (to include product packaging) do not contain polychlorinated biphenyls (PCBs). Moreover and consistent with SMC 7.06.172(B), the City of Spokane, at its sole discretion, may require (at no cost to the City) the apparent successful respondent to provide testing data (prior to contract execution or issue of purchase order) from an accredited laboratory or testing facility documenting the proposed products and or product packaging polychlorinated biphenyl levels.	Understood and Agreed
	#2	As far as you know, has this product type been tested for PCBs by a WA State accredited lab using EPA Method 1668c (or equivalent as updated)?	No
	#3	If so, were PCBs found at a measurable level?	No
	#4	As far as you know, has this actual product been tested for PCBs by a WA State accredited lab using EPA Method 1668 (or equivalent as updated)?	No

	#5	If so, note from whom the results can be obtained.	
	#6	Do you have reason to believe the product contains measurable levels of PCBs?	No
	#7	Do you have reason to believe the product packaging contains measurable levels of PCBs?	No
BIDDER INFORMATION			
	#1	Please indicate the appropriate point of contact (including Name, Title, Phone Number, and Email) regarding this Bid and placement of orders if awarded. If these actions will not be managed by the same person, please explicitly specify all relevant contacts.	marcus 509 535 8888 marcusr@maconsupply
ORGANIZATION			
	#1	Bidder Should Enter If Proposal Is of an Individual, Partnership, Corporation, and Existing Under The Laws of What US State. Enter Information Here:	corporation
CITY OF SPOKANE BUSINESS REGISTRATION REQUIREMENT			

	#1	<h2 style="margin: 0 0 0 5.75pt; line-height: normal"> Section 8.01.070 of the Spokane Municipal Code states that no person may engage in business with the City without first having obtained a valid business registration. Vendors and Contractors wishing to do business with the City of Spokane must obtain a Washington State Business license with a City of Spokane Endorsement. Both the business license and Spokane endorsement can be obtained on the Washington State Deparmtent of Revenue Website. If the Vendor believes it is exempt from obtaining a business license, visit Doing Business in Spokane - City of Spokane, Washington, to download the Exemption Request form. Exemption form<s> </s>shall be submitted to Taxes & Licensing for review and approval<s>s</s>: <a> taxesandlicenses@spokanecity.org . If approved, the Vendor or Contractor must provide <a>purchasing@spokanecity.org approved copy<span style="font-	Understood and Agreed

		size: 10pt; line-height: 115%">. </h2>	
	#2	City of Spokane Business Registration Number	601479672
PROPRIETARY INFORMATION/PUBLIC DISCLOSURE			
	1	All materials submitted to the City in responses to this competitive procurement shall become the property of the City. All materials received by the City are public records and are subject to being released pursuant to a valid public records request. Washington state law mandates that all documents used, received, or produced by a governmental entity are presumptively public records, and there are few exemptions. Chapter 41.56 RCW. When responding to this competitive procurement, please consider that what you submit will be a public record. If you believe that some part of your response constitutes legally protected proprietary information, you MUST submit those portions of your response as a separate part of your response, and you MUST label it as “PROPRIETARY INFORMATION.” If a valid public records request is then received by the City for this information, you will be given notice and an opportunity to go to court to obtain an injunction to prevent the City from releasing this part of your response within 10 business days from the date of the notice. If no injunction is obtained, the City is legally required to release the records. The City will neither look for nor honor any claims of “proprietary information” that are not within the separate part of your response.	Understood and Agreed
ADDITIONAL PURCHASES			
	#1	The City of Spokane reserves the right to purchase additional items at the current Value Blanket unit pricing. Vendor agrees to sell at the same current Value Blanket Price, and terms and conditions.	I acknowledge and agree
INTERLOCAL PURCHASE AGREEMENTS			

	#1	The City of Spokane has entered into Interlocal Purchase Agreements with other public agencies pursuant to chapter 39.34 RCW. In submitting a response, the Bidder agrees to provide its services to other public agencies at the same contracted price, terms and conditions it is providing to the City of Spokane, contingent upon the Vendor's review and approval at the time of a requested contract. The Vendor's right to refuse to enter into a contract with another public agency at the time of request shall be absolute.	Yes
MINORITY BUSINESS ENTERPRISE			
	#1	Bidder (is ___, is not ____) a Minority Business Enterprise. A Minority Business Enterprise is defined as a "business, privately or publicly owned, at least 51% of which is owned by minority group members. "For purpose of this definition, minority group members are Blacks, Hispanics, Asian Americans, American Indian or Alaskan Natives, or Women.	Is Not
SMALL BUSINESS			
	#1	Bidder (is ___, is not ___) a small business concern. (A small business concern for the purpose of government procurement is a concern, including its affiliates, which is independently owned and operated, is not dominant in the field of operations in which it is bidding on government contracts, and can further qualify under the criteria concerning number of employees, average annual receipts, or other criteria as prescribed by the Small Business Administration).	Is
NON-COLLUSION			
	#1	The Bidder certifies that his/her firm has not entered into any agreement of any nature whatsoever to fix, maintain, increase or reduce the prices or competition regarding the items covered by this Bid invitation	Certifies No Agreement Has Been Entered
ACCEPTANCE PERIOD			
	#1	Bids must provide sixty (60) days for acceptance by the City from the due date for receipt of Bids	Understood and Agreed
TERM OF VALUE OF BLANKET ORDER			
	#1	Any Value Blanket resulting from this ITB will be for a five -year period, beginning approximately September 1, 2026 and terminating August 31, 2031. The Vendor’s prices shall be firm throughout the first 12-months, 9/1/2026 to 8/31/2027, with annual pricing adjustments on the anniversary of the award (implied 9/1/20xx) with justification and concurred with by the City.	I acknowledge and agree

VALUE BLANKET ORDER RENEWAL OPTIONS OR EXTENSIONS			
	#1	Option renewals or extensions shall be initiated at the discretion of the City and subject to mutual agreement.	I acknowledge and agree
GENERAL INSTRUCTIONS			
	#1	The items to be furnished by the Vendor on this bid must be of the latest possible design and production.	Understood and Agreed
	#2	Time is of the essence in the performance of this contract after a delivery schedule is established.	Understood and Agreed
	#3	Successful Bidder will designate a representative who will be available during regular City business hours to serve as a primary contact for the City in the implementation of this supply agreement.	Understood and Agreed
	#4	The City of Spokane reserves the right to accept or reject any variance from the published specifications and to award the Bid in a manner that is most advantageous to the continued efficient operation of the City.	Understood and Agreed
	#5	The City reserves the right to accept or reject any part of or all Bids and to accept the Bid(s) deemed to be in the best interest of the City.	Understood and Agreed
	#6	The City of Spokane reserves the option of awarding this purchase by item grouping or by any manner most advantageous for the City. The City may choose from more than one vendor.	Understood and Agreed
	#7	As applicable Safety Data Sheets must be included with Bid. Upload Here:	
	#8	Bidder should be aware that Bids may be rejected if all questions are not completely and correctly answered.	Understood and Agreed
SPECIAL INSTRUCTIONS - GENERAL			
	#1	If the products differ from the provisions contained herein, these differences must be explained in detail.	I acknowledge and agree
	#2	Vendors found to have “overstated” the true ability of their product shall reimburse the City for all costs incurred with remanufacturing or replacement of units until all criteria has been satisfied. These costs shall also include legal, rentals, travel, etc.	I acknowledge and agree
	#3	Successful bidder shall furnish standard warranty. State Warranty here:	standard
	#4	Federal and State laws governing this product and its final certification must be satisfied.	Understood and Agreed

	#5	It shall be the Vendor's responsibility to conform to all Federal Standards for certification.	Understood and Agreed
	#6	Delivery time shall be a consideration of awarding this contract. Therefore the City requests a completed delivery date as soon as possible after receipt of any order release against Value Blanket Order.	I acknowledge and agree
	#7	If you took exception to #1 to #6 above, explain in detail.	
TECHNICAL SPECIFICATIONS			
	#1	Any technical specifications and general provisions listed are the minimum acceptable requirements and failure to comply may be used as a basis for rejection of the Bid. No Or-Equals will be accepted due to standardization.	I acknowledge and agree
	#2	Any references herein to a particular make or model number are intended not to be restrictive, but to set forth an acceptable level of quality and specifications.	Understood and Agreed
	#3	Awarded Vendor(s) would be responsible for providing spec'd provide spec'd Elephant Armor® spec'd products, as needed over a five-year period with annual pricing adjustments on the anniversary of the award with justification.	I acknowledge and agree
	#3	Product that does not meet specifications will not be accepted.	
	#3.1	Bidder acknowledges it has reviewed Technical Data Sheet Elephant Armor® DOT Industrial Grade Mortar located in the 'Documents' tab.	I acknowledge and agree
	#3.2	Bidder acknowledges it has reviewed Description Sheet Elephant Armor® GST544G Re-Emulsifying Overlay Primer sheet located in the 'Documents' tab.	I acknowledge and agree
	#3.4	If the products bid differs from the above specifications, these differences must be explained in detail.	
	#3.5	Bidder must provide "technical data sheets" for the items it is bidding, or bid may be considered non-responsive. Upload Here As A Single Document:	EA DOT Mortar Techsheet 03-2025 EN.pdf
	#3.6	Bidders must submit cover letters stating qualifications for supplying specified items to the City of Spokane. State name(s) and address(es) of Original Equipment Manufacturer (OEM) and distributors (if applicable) to be used in the production and delivery of valve. Upload Letter Here:	Standard_Terms_and_Conditions[1].docx

	#3.7	As applicable, Safety Data Sheets must be included with Quote. Upload Here	elephant armor sds.pdf	
	#4	To ensure the City needs are meet at any future point(s) in time during the five-year term of resulting five-year blanket order, the City reserves the right to contact awarded Vendor(s) to inquire if Vendor(s) offers additional Elephant Armor® products. Should the Vendor(s) advise it does, it would provide spec's current unit pricing including vendor's unit markup and freight cost. The City would reserve the right to purchase additional Elephant Armor® product(s) from Vendor(s) via this awarded blanket order.	I acknowledge and agree	
	#5	If you took exception to #1 through #5 above, explain in detail.		
DELIVERY - F.O.B. Delivery Point				
	#1	All products ordered shall be delivered FOB: Destination to the Street Department at 901 N. Nelson Street, Spokane, WA 99202.	I acknowledge and agree	
	#1.1	Risk of Loss. Regardless of F.O.B. point, Vendor agrees to bear all risks of loss, injury or destruction of items ordered herein which occur prior to delivery; such loss, injury or destruction shall not release Vendor from any obligation hereunder.	I acknowledge and agree	
	#2	Standard Leadtime for delivery after receipt of order(s) is _____ calendar days. Enter number of calendar days:	7 days	
	#2.1	Partial deliveries shall be accepted and any delivery delays must be communicated to the City employee who placed the order BEFORE the anticipated delivery date. Vendor is responsible for ensuring all deliveries meet promised timelines and for any resulting expenses, such as expedited freight costs.	I acknowledge and agree	
	#3	Vendor willing and able to maintain available inventory to deliver at least one (1) pallet of 50 pounds of Elephant Armor® DOT Industrial Grade Mortar, GST523BF, and equivalent 1-Gallon Elephant Armor® Re-Emulsifying Overlay Primer, GST544G, within three (3) business days ARO.	Yes	
	#3.1	State the quantity of 50 pounds of Elephant Armor® DOT Industrial Grade Mortar, GST523B, that comprise a pallet.	40	
	#3.2	State quantities the quantity of 1-Gallon Elephant Armor® Re-Emulsifying Overlay Primer, GST544G, that comprise a pallet.	4	
	#4	If you took exception to #1 to #3.2 above, explain in detail.		
PRICING				

	#1	Sales Tax: The City will apply applicable tax to Bidder’s response when tabulating bids. Vendor acknowledges the City of Spokane is not a tax exempt entity and is therefore obligated to pay sales tax under Washington State law. Therefore, all submissions shall be tabulated with the applicable sales tax rate whether that tax shall be charged through the vendor or paid by the City as use tax.	Understood and Agreed	
	#2	All packaging, freight, and delivery expenses shall be the responsibility of the awarded Vendor. Unit pricing on this quote is understood to include delivery to the FOB point.	Understood and Agreed	
	#3.1	State Minimum Quantities of 50 pounds of Elephant Armor® DOT Industrial Grade Mortar, GST523, required to be ordered per an individual order placed.	40 sacks	
	#3.2	State Minimum Quantities of 1-Gallon Elephant Armor® Re-Emulsifying Overlay Primer, GST544G, required to be ordered per an individual order placed.	4	
	#4	Annual Quantities stated on Pricing Form are estimates only and are not to be construed as firm or guaranteed. Quantities, when used, are estimates only and are given for the purpose of comparing quotes on a uniform basis. Quantities shall be bid on a more or less basis. Actual usage may be more or less. Orders will be placed as needed throughout Value Blanket Order term with a blanket order process. Payment will only be made only for quantities actually ordered, delivered and accepted, whether greater or less than the stated amounts.	Understood and Agreed	
	#5	Complete Pricing Form Tab. By entering Bidder's unit pricing inclusive all packaging, freight, and delivery expenses.	Understood and Agreed	
	#6	Pricing shall be firm throughout the initial base-year, September 1, 2026 through August 31, 2027.	Understood and Agreed	
	#7	PRICING ADJUSTMENTS: Pricing adjustments can be requested to take effect on the anniversary of the award with justification. A written request for a price adjustment will be submitted a minimum of thirty (30) calendar days in advance of anniversary of award, or as mutually agreed upon by the by City. Approved price adjustments shall remain unchanged for at least 12 months thereafter. Retroactive price increase adjustments will not be considered.	Understood and Agreed	

	#8.1	Adjustments to pricing shall be the result of increases at the manufacturer's level, incurred after contract commencement date, shall not produce a higher profit margin than that on the original Value Blanket Order, clearly identify the items impacted by the increase, and be accompanied by documentation acceptable to Spokane City sufficient to justify the requested increase. Spokane City will be the sole judge as to the acceptability of sources. Acceptance of a request will be at the sole discretion of Spokane City.	Understood and Agreed	
	#8.2	All price adjustments must be agreed on by both parties. Price increase must apply to all or broad classes of customers and shall in no way single out the City of Spokane.	Understood and Agreed	
	#8.3	An approved price increase will become effective after the approval of the increase.	Understood and Agreed	
	#8.4	Retroactive price increase adjustments will not be considered.	Understood and Agreed	
	#8.5	Failure to reach agreement on a request for an increase in price(s) can, at the sole option of the City, result in the termination of the Value Blanket Order.	Understood and Agreed	
	#9	PRICE DECREASES: During the term of the Value Blanket Order, should the Vendor realize any declines at the manufacturer's level, or cost reductions, or enter into pricing agreements with other customers providing greater benefits or lower pricing, the Vendor shall immediately request that an amendment to the Value Blanket Order to provide similar pricing to the City, if the contract with other customers offers similar usage quantities, and similar conditions impacting pricing. The Vendor shall immediately notify the City of any such contracts entered into by the Vendor. Price decreases may be considered and implemented at any time upon mutual consent of the parties	Understood and Agreed	
	#10	If you took exception to #1 through #9 above explain in detail.		
ADDITIONAL DOCUMENTS BIDDER WOULD LIKE TO UPLOAD				
	#1	If you have additional information/documents to submit, upload them here.		
	#2	If you have additional information/documents to submit, upload them here.		
	#3	If you have additional information/documents to submit, upload them here.		
	#4	If you have additional information/documents to submit, upload them here.		
	#5	If you have additional information/documents to submit, upload them here.		

Pricing Responses

Group	Reference Number	Description	Type	Unit Of Measure	Quantity	Symbol	Title	Unit Price	Ext Base Price	Comment
Annual Quantities shown on “Pricing Tab” are estimates only and are not to be construed as firm or guaranteed. Quantities are estimates only and are given for the purpose of comparing bids on a uniform basis. Unit Pricing SHOULD NOT include tax										
	#1	Elephant Armor®, GST523BF, 50-Pound Bag, DOT Industrial Grade Mortar. All-Inclusive Unit-Price-Per-Bag shall include all packaging and freight expenses. Unit Pricing shall NOT include tax.	Base	Per 50 Pound Bag	448.00	$	USD			$57.10
	#2	Elephant Armor® , GST544G, 1-Gallon Re-Emulsifying Overlay Primer. All-Inclusive Unit Price-Per-Gallon shall include all packaging and freight expenses. Unit Pricing shall NOT include tax.	Base	Per 1-Gallon	64.00	$	USD			$38

Total Base Bid	$0.00

Addendum 1
7/21/2026

RFQ 6576-26
Elephant Armor® DOT Industrial Grade Mortar and Overlay Primer, As-Needed Over Five-Year Period

PLEASE NOTE: A SIGNED COPY OF THIS ADDENDUM MUST BE SUBMITTED WITH YOUR BID, OR THE BID MAY BE CONSIDERED NON-RESPONSIVE.

Addendum 1 makes the following change:

Bid Due Dated is changed TO: 7/28/2026 at 9AM, From 7/21/2026 at 9AM

Rick Rinderle
Procurement Specialist

The undersigned acknowledges receipt of this Addendum.

Macon Supply
Company

Signature

STANDARD TERMS AND CONDITIONS

1. PATENTS, TRADEMARKS AND COPYRIGHTS
The Vendor warrants the items to be furnished do not infringe any patent, registered trademark or copyright, and agrees to hold Purchaser harmless in the event of any infringement or claim thereof.

2. TITLE
The Vendor warrants that the items to be furnished are free and clear of all liens and encumbrances and that the Vendor has good and marketable title to same.

3. COMPLIANCE WITH LAWS
The Vendor shall comply with all applicable federal, state and local laws, rules, and regulations, affecting its performance and hold the Purchaser harmless against any claims arising from the violation thereof.

4. CONTRACT DISPUTES
Any contract agreement shall be performed under the laws of the State of Washington. Any litigation to enforce such agreement or any of its provisions shall be brought in Spokane County, Washington.

5. OVERCHARGES
The Vendor assigns to the Purchaser any claims for anti-trust violations or overcharges relating to items purchased in filling the Purchaser's orders. The Vendor warrants that its suppliers will also assign any such claims.

6. WARRANTIES
The Vendor warrants that the items furnished will conform to its description and any applicable specifications, shall be of good merchantable quality and fit for the known purpose for which sold. This warranty is in addition to any standard warranty or service guarantee by Vendor to the Purchaser.

7. UNIFORM COMMERCIAL CODE
The Uniform Commercial Code (UCC), as effective in Washington State, RCW Title 62A, shall determine the rights and duties of the Vendor and the Purchaser.

8. NON-DISCRIMINATION
No individual shall be excluded from participation in, denied the benefit of, subjected to discrimination under, or denied employment in the administration of or in connection with this Contract because of age, sex, race, color, religion, creed, marital status, familial status, sexual orientation including gender expression or gender identity, national origin, honorably discharged veteran or military status, the presence of any sensory, mental or physical disability, or use of a service animal by a person with disabilities. The Contractor agrees to comply with, and to require that all subcontractors comply with, Section 504 of the Rehabilitation Act of 1973 and the Americans with Disabilities Act, as applicable to the Contractor.

9. SAVE HARMLESS
Vendor shall protect, indemnify and save the Purchaser harmless from and against any damage, cost or liability for any injuries to persons or property arising from acts or omissions of Vendor, his employees, agents or sub-contractors, howsoever caused.

10. TAXES

- FEDERAL. The Purchaser is exempt from federal excise taxes. Exemption certificates will be furnished on request.

- SALES TAX. The City of Spokane is required to pay Washington State Sales/Use Tax on all purchases. All bidders whether inside or outside the State of Washington shall show the tax rate applicable to this quote. All taxes payable by the City of Spokane as a result of this contract are considered a part of the quote evaluation. Washington State Sales Tax is payable by the City of Spokane direct to the State of Washington on awards made to out-of-state vendors who do not have a Washington State Sales Tax Number. If you have any questions concerning the appropriate rate, contact the Washington State Department of Revenue (509) 482-3800.

- Business, occupational and personal property taxes are the responsibility of the Vendor.

11. ASSIGNMENTS

The provisions or monies due under the contract or purchase order shall be assignable only with the prior consent of Purchasing.

12. CHANGES

No alteration in any of the terms, conditions, delivery, price, quality or specifications of items ordered will be effective without the written consent of Purchasing.

13. DEFAULT

The Vendor agrees that if a law suit is instituted by the Purchaser for any default on the part of the Vendor, and the Vendor is adjudged to be in default, he/she shall pay to the Purchaser all costs and expenses, expended or incurred by the Purchaser in connection therewith, and reasonable attorney's fees. Venue shall be in the County of Spokane, Washington.

14. REJECTION

All items purchased herein are subject to approval by the Purchaser. Any rejection of items resulting because of non-conformity to the terms or specifications of this order whether held by the Purchaser or returned, will be at the Vendor's risk and expense.

15. TERMINATION

In event of a breach by Vendor of any of the provisions of this order, Purchaser reserves the right to terminate upon immediate oral or written notification to the Vendor. Vendor shall be liable for damages suffered by the Purchaser resulting from Vendor's breach of contract.

16. NON-WAIVER

No delay or waiver, by either party, to exercise any contractual right shall be considered as a waiver of such right or any other right.

17. SEVERABILITY

In the event any provision of this contract should become invalid, the rest of the contract shall remain in full force and effect.

18. MINORITY BUSINESS OPPORTUNITIES

Purchaser actively solicits the participation of certified minority business enterprises in the bidding of any and all goods or services.

19. FREIGHT TERMS

- FREIGHT CHARGES ARE THE RESPONSIBILITY OF THE WINNING VENDOR.

- Risk of Loss. Regardless of F.O.B. point, Vendor agrees to bear all risks of loss, injury or destruction of items ordered herein which occur prior to delivery; such loss, injury or destruction shall not release Vendor from any obligation hereunder.

20. VENDOR'S COOPERATION

The Vendor shall communicate with City of Spokane Purchasing and shall actively cooperate in all matters pertaining to this contract or purchase in any way Purchasing may direct to the end that the Purchaser shall receive efficient and satisfactory service.

Technical Data Sheet

ELEPHANT ARMOR®

DOT Concrete Repair Mortar



Elephant Armor® DOT Industrial Grade Mortar Technical Data Sheet

DESCRIPTION

Elephant Armor® Mortar - DOT is a single component, cementitious, fiber based, medium to fast setting, zero polymer, repair and overlay Engineered Ductal Mortar (EDM). In addition to a mechanical bond, our fiber creates a fully engaged molecular bond within our patented mortar matrix, providing extremely high tensile and flexural strength. It can be placed with a textured roller (preferred method) or traditional placement tools.

FEATURES / BENEFITS:

- Fiber reinforced: Superior flexural and tensile strength as thin as ¼".
- High ductility, allowing the overlay or repair to 'FLEX' without failure.
- Highly resistant to de-icing salts, freeze/thaw.
- Superior tensile strain capacity over other cement based products for improved crack resistance.
- Superior bond strength to that of other fiber and acrylic based mortars.
- Ideal as a structural underlayment.
- Prevents the propagation of existing cracks through the surface.
- Highly impermeable and abrasion resistant.
- Unparalleled as a stampable overlay.

SHELF LIFE

Up to 3 years in its original unopened package and stored in a humidity controlled environment. (Not exposed to moisture or high humidity.)

PACKAGING

- 10 lb (4.5 kg) plastic pails
- 50 lb (22.7 kg) plastic lined bags

COVERAGE/YIELD

A 50 lb (22.7kg) bag of Elephant Armor® Mortars will yield approximately 0.5 ft³ (0.014 m³) of material.

Applied at the following thicknesses, one 50 lb (22.7 kg) bag of Elephant Armor® Mortar will cover:

- ¼" (6.3 mm) – 22 ft² (2 m2)
- ½" (12.7 mm) – 11 ft² (1 m2)

Note: Coverage rates are approximate

PRIMARY APPLICATIONS

Walkways, curbs, ramps, slabs, spalls, cracks, airports-runways, taxiways and gates, bridges, ICF walls, parking structures, tunnels, dams, industrial plants or anywhere a high strength concrete repair mortar is called for.

Structural monolithic underlayment or overlay for interior and exterior applications.

Mixing

Mix the dry contents prior to adding water. Add approximately 5.5 - 6.5 US quarts (5.2 - 6.2 liters) of water (depending on desired slump). It is mandatory to thoroughly mix with a dual shaft power mixer. (example: ColloMix Xo 55 Duo) Due to our unique product design, this type of mixer is required to ensure sufficient shear capacity needed to properly provide a homogeneous mix. Do not use a drywall paddle blade. While mixing, ensure there is no unhydrated Elephant Armor® on the sides or bottom of the bucket, as this will alter the water/cement ratio. Continue mixing until the mixture is lump free and has achieved the desired consistency (slump) for your application. When mixing our ten pound buckets or a small amount of Elephant Armor® Mortar, a ½" drill or larger, using an egg beater, mortar or Jiffy Bit can be used. Actual mixing time will depend on mixer speed, shear capacity, and desired consistency or flow required.

TECHNICAL INFORMATION – Material Properties @ 75°F (24°C)

All GST material testing properties meet or exceed our published data. Test results are confirmed by third party Independent Laboratories.

Compressive Strength psi ASTM C109
4 hrs — 4,000 (27.72 MPa)
1 day — 5,500 (37.92 MPa)
7 days — 6,500 (44.81 MPa)
28 days — 7,000 (48.26 MPa)

Split Tensile Strength psi ASTM C 496
28 days — 600 (4.14 MPa)

Flexural Performance psi ASTM C 1609
28 days — 1,600 (11.03 MPa)

Modulus of Elasticity, ksi ASTM C469
(ASTM C39 for compressive strength)
7 days — 1,800 psi *(12.41 MPa)*
28 days — 2,700 psi *(18.62 MPa)*

Shrinkage ASTM C 928/ASTM C157
28 days stored in water % — 0.019
28 days stored in air % — 0.036

Electrical Indication of Concrete's Ability to Resist Chloride Ion Penetration ASTM C 1202
321.52 Charge Passed (coulombs)
Very Low Chloride Ion Penetrability

Set Times ASTM C 191
Initial set — approx. 50 min
Final set — approx. 70 min

Bond Strength psi ASTM C 882
28 days avg — 2500 (17.24 MPa)

Water-soluble Chloride (% by mass of concrete) **ASTM C1218**
50 days — 0.01391

Acid-soluble Chloride (% by mass of concrete) **ASTM C1152**
50 days — 0.03087

Coefficient of Thermal Expansion, in/in/°F **AASHTO T-336**
7 Days — 775
28 Days — 4.968×10^{-6}

This product is made from the finest raw materials available and manufactured to proven formulation under strict quality control for its intended use. However, results obtained with the use of this product under a variety of conditions may depend on circumstances beyond our control. GST International, Inc. (including the seller thereof) warrants only that its products will be free from defects in materials. GST International, Inc.'s (including the seller thereof) sole obligation, and the purchaser's (including the person using or benefiting from its use) sole and exclusive remedy in the event of a defect covered by the foregoing warranty, shall be, at GST International, Inc.'s discretion, to (a) replace the defective product, or (b) refund to the purchaser the purchase price paid for such defective product. There are no warranties other than the limited express warranty provided above. In no event shall GST International, Inc. (or the seller of its products) be liable for incidental or consequential damages resulting or arising from the use of its products.

Safety Data Sheet

Issue Date: 08-May-2020 **Revision Date:** 12-May-2020 **Version** 1

1. IDENTIFICATION

Product identifier

Product Code & Name GST 523 Elephant Armor DOT Industrial Grade Mortar

Other means of identification

SDS # GST-002

Recommended use of the chemical and restrictions on use

Recommended Use Concrete Patch and Overlay.

Details of the supplier of the safety data sheet

Manufacturer Address

GST International, Inc.
1205 Icehouse Ave.
Sparks, NV 89431
Ph: 775-829-2626
www.gstinternational.com

Emergency telephone number

Emergency Telephone INFOTRAC 1-800-535-5053 (North America)
1-352-323-3500 (International) Contract #93918

2. HAZARDS IDENTIFICATION

Appearance Grey granulate **Physical state** Solid **Odor** Odorless

Classification

Skin corrosion/irritation	Category 2
Serious eye damage/eye irritation	Category 1
Skin sensitization	Category 1
Carcinogenicity	Category 1A
Specific target organ toxicity (single exposure)	Category 3
Specific target organ toxicity (repeated exposure)	Category 1

Signal Word

Danger

Hazard statements

Causes skin irritation
Causes serious eye damage
May cause an allergic skin reaction
May cause cancer
May cause respiratory irritation
Causes damage to organs through prolonged or repeated exposure



Precautionary Statements - Prevention
Obtain special instructions before use
Do not handle until all safety precautions have been read and understood
Use personal protective equipment as required
Wash face, hands and any exposed skin thoroughly after handling
Contaminated work clothing must not be allowed out of the workplace
Wear protective gloves
Use only outdoors or in a well-ventilated area
Do not breathe dust/fume/gas/mist/vapors/spray
Do not eat, drink or smoke when using this product

Precautionary Statements - Response
If exposed or concerned: Get medical advice/attention
IF IN EYES: Rinse cautiously with water for several minutes. Remove contact lenses, if present and easy to do. Continue rinsing
Immediately call a poison center or doctor/physician
IF ON SKIN: Wash with plenty of water and soap
Take off contaminated clothing and wash before reuse
If skin irritation or rash occurs: Get medical advice/attention
IF INHALED: Remove victim to fresh air and keep at rest in a position comfortable for breathing

Precautionary Statements - Storage
Store locked up
Store in a well-ventilated place. Keep container tightly closed

Precautionary Statements - Disposal
Dispose of contents/container to an approved waste disposal plant

3. COMPOSITION/INFORMATION ON INGREDIENTS

Chemical name	CAS No	Weight-%
Aluminosilicate Glass	NOT ASSIGNED	15-35
Silica	1317-95-9	25-50
Calcium Sulfoaluminate Cement	960375-09-1	25-50
Portland cement	65997-15-1	5-15
Silica, Quartz	14808-60-7	<2.5

If Chemical Name/CAS No is "proprietary" and/or Weight-% is listed as a range, the specific chemical identity and/or percentage of composition has been withheld as a trade secret.

4. FIRST AID MEASURES

Description of first aid measures

General Advice Provide this SDS to medical personnel for treatment.

Eye Contact Immediately flush with plenty of water. After initial flushing, remove any contact lenses and continue flushing for at least 15 minutes. Immediate medical attention is required.

Skin Contact Immediately flush eyes or skin with plenty of water for at least 15 minutes while removing contaminated clothing and shoes. Wash contaminated clothing before reuse. If skin irritation or rash occurs: Get medical advice/attention.

Inhalation Remove exposed individual(s) to fresh air for 20 minutes. Consult a physician/poison center if individual's condition declines or if symptoms persist.

Ingestion Rinse mouth. Do not induce vomiting without medical advice. Drink 1 or 2 glasses of water. Never give anything by mouth to an unconscious person. Get medical attention.

Most important symptoms and effects, both acute and delayed

Symptoms Causes skin irritation and serious eye damage. Coughing. Shortness of breath. May cause an allergic skin reaction. May cause respiratory irritation.

Indication of any immediate medical attention and special treatment needed

Notes to Physician Pre-existing lung conditions such as, but not limited to bronchitis, emphysema and asthma.

5. FIRE-FIGHTING MEASURES

Suitable Extinguishing Media
Dry powder, Carbon dioxide (CO2), water fog or foam.

Unsuitable Extinguishing Media Not determined.

Specific Hazards Arising from the Chemical
Product is not flammable or combustible.

Protective equipment and precautions for firefighters
As in any fire, wear self-contained breathing apparatus pressure-demand, MSHA/NIOSH (approved or equivalent) and full protective gear.

6. ACCIDENTAL RELEASE MEASURES

Personal precautions, protective equipment and emergency procedures

Personal Precautions Use personal protection recommended in Section 8. Ensure adequate ventilation.

Environmental precautions

Environmental precautions Clean up leaks/spills immediately to prevent soil or water contamination. See Section 12 for additional Ecological Information.

Methods and material for containment and cleaning up

Methods for Containment Prevent further leakage or spillage if safe to do so.

Methods for Clean-Up Reclaim where possible. Avoid the generation of dusts during clean-up. Sweep up and shovel into suitable containers for disposal. For waste disposal, see section 13 of the SDS.

7. HANDLING AND STORAGE

Precautions for safe handling

Advice on Safe Handling Obtain special instructions before use. Do not handle until all safety precautions have been read and understood. Use personal protection recommended in Section 8. Wash face, hands and any exposed skin thoroughly after handling. Do not eat, drink or smoke when using this product. Do not breathe dust. Avoid creating dust. Contaminated work clothing must not be allowed out of the workplace. Use only with adequate ventilation.

Conditions for safe storage, including any incompatibilities

Storage Conditions Store locked up. Keep containers tightly closed in a dry, cool and well-ventilated place.

Incompatible Materials Strong oxidizing agents.

8. EXPOSURE CONTROLS/PERSONAL PROTECTION

Exposure Guidelines

Chemical name	ACGIH TLV	OSHA PEL	NIOSH IDLH
Silica 1317-95-9	TWA: 0.025 mg/m^3 respirable particulate matter	TWA: 50 µg/m^3 excludes construction work, agricultural operations, and exposures that result from the processing of sorptive clays (vacated) TWA: 0.1 mg/m^3 quartz respirable dust	IDLH: 50 mg/m^3 respirable dust TWA: 0.05 mg/m^3 respirable dust
Portland cement 65997-15-1	TWA: 1 mg/m^3 particulate matter containing no asbestos and <1% crystalline silica, respirable particulate matter	TWA: 15 mg/m^3 total dust TWA: 5 mg/m^3 respirable fraction (vacated) TWA: 10 mg/m^3 total dust (vacated) TWA: 5 mg/m^3 respirable fraction TWA: 50 mppcf <1% Crystalline silica	IDLH: 5000 mg/m^3 TWA: 10 mg/m^3 total dust TWA: 5 mg/m^3 respirable dust
Silica, Quartz 14808-60-7	TWA: 0.025 mg/m^3 respirable particulate matter	TWA: 50 µg/m^3 TWA: 50 µg/m^3 excludes construction work, agricultural operations, and exposures that result from the processing of sorptive clays (vacated) TWA: 0.1 mg/m^3 respirable dust : (250)/(%SiO2 + 5) mppcf TWA respirable fraction : (10)/(%SiO2 + 2) mg/m^3 TWA respirable fraction	IDLH: 50 mg/m^3 respirable dust TWA: 0.05 mg/m^3 respirable dust

Appropriate engineering controls

Engineering Controls Apply technical measures to comply with the occupational exposure limits. Maintain eye wash fountain and quick-drench facilities in work area. Provide local exhaust ventilation to meet exposure limits.

Individual protection measures, such as personal protective equipment

Eye/Face Protection Wear safety glasses with side shields (or goggles). Refer to 29 CFR 1910.133 for eye and face protection regulations.

Skin and Body Protection Wear protective gloves and protective clothing. Refer to 29 CFR 1910.138 for appropriate skin and body protection.

Respiratory Protection If necessary, wear a MSHA/NIOSH-approved respirator. Refer to 29 CFR 1910.134 for respiratory protection requirements.

General Hygiene Considerations Avoid contact with skin, eyes and clothing. After handling this product, wash hands before eating, drinking, or smoking. If contact occurs, remove contaminated clothing. If needed, take first aid action shown on section 4 of this SDS. Launder contaminated clothing before reuse.

9. PHYSICAL AND CHEMICAL PROPERTIES

Information on basic physical and chemical properties

Physical state	Solid		
Appearance	Grey granulate	**Odor**	Odorless
Color	Grey	**Odor Threshold**	Not determined

Property	**Values**	**Remarks • Method**
pH	Not applicable	
Melting point / freezing point	Not determined	
Boiling point / boiling range	999 °C / 1,830.2 °F	
Flash point	None	
Evaporation Rate	Not determined	
Flammability (Solid, Gas)	Not determined	
Flammability Limit in Air		
Upper flammability or explosive limits	Not determined	
Lower flammability or explosive limits	Not determined	
Vapor Pressure	Not determined	
Vapor Density	Not determined	
Relative Density	Not determined	
Water Solubility	Insoluble in water	
Solubility in other solvents	Not determined	
Partition Coefficient	Not applicable	
Autoignition temperature	Product is not self-igniting	
Decomposition temperature	Not determined	
Kinematic viscosity	Not determined	
Dynamic Viscosity	Not determined	
Explosive Properties	Not determined	
Oxidizing Properties	Not determined	

10. STABILITY AND REACTIVITY

Reactivity
Not reactive under normal conditions.

Chemical stability
Stable under recommended storage conditions.

Possibility of hazardous reactions
None under normal processing.

Hazardous Polymerization Hazardous polymerization does not occur.

Conditions to Avoid
Keep out of reach of children.

Incompatible materials
Strong oxidizing agents.

Hazardous decomposition products
None known based on information supplied.

11. TOXICOLOGICAL INFORMATION

Information on likely routes of exposure

Product Information

Eye Contact Causes serious eye damage.

Skin Contact Causes skin irritation. May cause an allergic skin reaction.

Inhalation May cause irritation of respiratory tract.

Ingestion May cause discomfort if swallowed.

Component Information
Not available

Symptoms related to the physical, chemical and toxicological characteristics

Symptoms Please see section 4 of this SDS for symptoms.

Delayed and immediate effects as well as chronic effects from short and long-term exposure

Carcinogenicity May cause cancer.

Chemical name	ACGIH	IARC	NTP	OSHA
Silica 1317-95-9	A2	Group 1	Known	X
Silica, Quartz 14808-60-7	A2	Group 1	Known	X

Legend
ACGIH (American Conference of Governmental Industrial Hygienists)
A2 - Suspected Human Carcinogen
IARC (International Agency for Research on Cancer)
Group 1 - Carcinogenic to Humans
NTP (National Toxicology Program)
Known - Known Carcinogen
OSHA (Occupational Safety and Health Administration of the US Department of Labor)
X - Present

STOT - single exposure May cause respiratory irritation.

STOT - repeated exposure Causes damage to organs through prolonged or repeated exposure.

Chronic toxicity Silicosis is a progressive fibrotic pneumoconiosis which greatly decreases the ability of the lungs to provide oxygen (decreased pulmonary capacity). The extent and severity of lung injury depends on a variety of factors including particle size, percentage of silica, natural resistance, dust concentration and length of exposure. The damaged lungs will become increasingly less able to provide the body with oxygen causing tiredness, shortness of breath, decreased capacity to work, and can result in death by cardiac failure or by the destruction of lung tissue. Persons who develop silicosis have greatly increased risks of developing tuberculosis and workers who are exposed to crystalline silica and smoke have increased risks of lung damage. Silicosis may progress in the absence of continued exposure.

Numerical measures of toxicity

The following values are calculated based on chapter 3.1 of the GHS document No values to calculate.

12. ECOLOGICAL INFORMATION

Ecotoxicity
An environmental hazard cannot be excluded in the event of unprofessional handling or disposal.

Component Information
Not available

Persistence/Degradability
Not determined.

Bioaccumulation
There is no data for this product.

Mobility
Not determined

Other Adverse Effects
Not determined

13. DISPOSAL CONSIDERATIONS

Waste Treatment Methods

Disposal of Wastes Disposal should be in accordance with applicable regional, national and local laws and regulations.

Contaminated Packaging Disposal should be in accordance with applicable regional, national and local laws and regulations.

14. TRANSPORT INFORMATION

Note Please see current shipping paper for most up to date shipping information, including exemptions and special circumstances.

DOT Not regulated

IATA Not regulated

IMDG Not regulated

15. REGULATORY INFORMATION

International Inventories

Chemical name	TSCA	TSCA Inventory Status	DSL/NDSL	EINECS/ELINCS	ENCS	IECSC	KECL	PICCS	AICS
Silica						X	X	X	X
Portland cement	X	ACTIVE	X	X		X	X		X
Silica, Quartz	X	ACTIVE	X	X	X	X	X	X	X

Legend:

TSCA *- United States Toxic Substances Control Act Section 8(b) Inventory*

DSL/NDSL *- Canadian Domestic Substances List/Non-Domestic Substances List*

EINECS/ELINCS *- European Inventory of Existing Chemical Substances/European List of Notified Chemical Substances*

ENCS *- Japan Existing and New Chemical Substances*

IECSC *- China Inventory of Existing Chemical Substances*

KECL *- Korean Existing and Evaluated Chemical Substances*

PICCS *- Philippines Inventory of Chemicals and Chemical Substances*

AICS *- Australian Inventory of Chemical Substances*

US Federal Regulations

CERCLA
This material, as supplied, does not contain any substances regulated as hazardous substances under the Comprehensive Environmental Response Compensation and Liability Act (CERCLA) (40 CFR 302) or the Superfund Amendments and Reauthorization Act (SARA) (40 CFR 355).

SARA 313
Section 313 of Title III of the Superfund Amendments and Reauthorization Act of 1986 (SARA). This product does not contain any chemicals which are subject to the reporting requirements of the Act and Title 40 of the Code of Federal Regulations, Part 372

CWA (Clean Water Act)
This product does not contain any substances regulated as pollutants pursuant to the Clean Water Act (40 CFR 122.21 and 40 CFR 122.42)

US State Regulations

California Proposition 65
This product contains the following Proposition 65 chemicals.

Chemical name	California Proposition 65
Silica - 1317-95-9	Carcinogen
Silica, Quartz - 14808-60-7	Carcinogen

U.S. State Right-to-Know Regulations

Chemical name	New Jersey	Massachusetts	Pennsylvania
Silica 1317-95-9	X	X	X
Portland cement 65997-15-1	X	X	X
Silica, Quartz 14808-60-7	X	X	X

16. OTHER INFORMATION

NFPA	**Health Hazards**	**Flammability**	**Instability**	**Special Hazards**
	3	0	0	Not determined
HMIS	**Health Hazards**	**Flammability**	**Physical hazards**	**Personal Protection**
	3*	0	0	Not determined

Chronic Hazard Star Legend ** = Chronic Health Hazard*

Issue Date: 08-May-2020
Revision Date: 12-May-2020
Revision Note: New product

Disclaimer
The information provided in this Safety Data Sheet is correct to the best of our knowledge, information and belief at the date of its publication. The information given is designed only as a guidance for safe handling, use, processing, storage, transportation, disposal and release and is not to be considered a warranty or quality specification. The information relates only to the specific material designated and may not be valid for such material used in combination with any other materials or in any process, unless specified in the text.

End of Safety Data Sheet

Washington State Department of Revenue

Business Lookup

License Information:

New search Back to results

Entity name: MACON SUPPLY, INC.

Business name: MACON SUPPLY, INC.

Entity type: Profit Corporation

UBI #: 601-479-672

Business ID: 001

Location ID: 0001

Location: Active

Location address: 7207 E BROADWAY AVE
SPOKANE VALLEY WA 99212-1134

Mailing address: PO BOX 80250
BILLINGS MT 59108-0250

Excise tax and reseller permit status: Click here

Secretary of State information: Click here

Endorsements

Endorsements held at this location	License #	Count	Details	Status	Expiration date	First issuance date
Spokane General Business - Non-Resident				Active	Oct-31-2027	Oct-16-2026
Spokane Valley General Business				Pending	Oct-31-2027	

Owners and officers on file with the Department of Revenue

Owners and officers	Title
MOFFET, BLAKE	
MOFFET, SHERRI	
MOFFET, THOMAS	

Registered Trade Names

Registered trade names	Status	First issued
MACON SUPPLY, INC.	Active	Jun-29-2016

The Business Lookup information is updated nightly. Search date and time: 10/27/2026 11:20:16 AM

Contact us

How are we doing?
Take our survey!

Don't see what you expected?
Check if your browser is supported

Agenda Sheet for City Council:

Committee: PIES **Date:** 11/10/2026

Committee Agenda type: Reports, Contracts & Claims

Council Meeting Date: 12/02/2026

Date Rec'd	10/29/2026
Clerk's File #	FIN 2026-0002
Cross Ref #	
Project #	
Bid #	
Requisition #	

Submitting Dept	SPOKANE AIRPORT BOARD
Contact Name/Phone	ROB SCHULTZ 455-6448
Contact E-Mail	RSCHULTZ@SPOKANEAIRPORTS.NET
Agenda Item Type	Report Item
Council Sponsor(s)	BWILKERSON
Sponsoring at Administrators Request	NO
Lease? NO	**Grant Related?** NO **Public Works?** NO
Agenda Item Name	APPROVAL OF SPOKANE AIRPORTS' 2027 BUDGET

Agenda Wording

Approval of the Spokane Airports' 2027 budget in the amount of $149,047,395.

Summary (Background)

Spokane Airports' 2027 operating budget is $60,857,884 and the capital budget is $88,189,511. The total consolidated 2027 budget is $149,047,395. The Airport does not receive any local or state public tax funds and does not require financial support from the City or County. The Airport is financially self-sufficient from revenues generated from leases, fees, and concession agreements. Airport revenues must be expended in accordance with the Federal Aviation Administration's Revenue Use Policy. Pursuant to Chapter 14.08 RCW, Spokane County ("County"), by and through its Board of County Commissioners, and the City of Spokane ("City"), by and through its City Council, entered into an agreement dated October 7, 2019 (City of Spokane City Clerk File # RES 2019-0086, Spokane County Resolution No. 19-1338) to provide for the joint operation of Spokane International Airport, Felts Field Airport and Spokane International Airport Business Park ("Agreement"). Section 4.2 of the Agreement, requires the Airport Board to submit "a proposed comprehensive balanced budget operating budget" and it "must be jointly approved by the Parties prior to the end of the current calendar year in which the proposed budget is submitted." On October 22, 2026, the Airport Board recommended to the City and County that they approve Spokane Airports' 2027 budget in the amount of $149,047,395.

What impacts would the proposal have on historically excluded communities?

Not applicable

How will data be collected, analyzed, and reported concerning the effect of the program/policy by racial, ethnic, gender identity, national origin, income level, disability, sexual orientation, or other existing disparities?

Not applicable

How will data be collected regarding the effectiveness of this program, policy, or product to ensure it is the right solution?

Not applicable

Describe how this proposal aligns with current City Policies, including the Comprehensive Plan, Sustainability Action Plan, Capital Improvement Program, Neighborhood Master Plans, Council Resolutions, and others?

Pursuant to Chapter 14.08 RCW and Section 4.2 the joint operation agreement of October 7, 2019 (City of Spokane City Clerk File # RES 2019-0086, Spokane County Resolution No. 19-1338).

Council Subcommittee Review

Fiscal Impact	
Approved in Current Year Budget?	N/A
Total Cost	**$**
Current Year Cost	**$**
Subsequent Year(s) Cost	**$**

Narrative

Amount		**Budget Account**
Select	**$**	**#**
Select	**$**	**#**
Select	**$**	**#**
Select	**$**	**#**
Select	**$**	**#**
Select	**$**	**#**

Funding Source	N/A
Funding Source Type	Select

Is this funding source sustainable for future years, months, etc?

Expense Occurrence	N/A

Other budget impacts (revenue generating, match requirements, etc.)

Approvals		**Additional Approvals**	
Dept Head	WRIGHT, CHRISTOPHER		
Division Director			
Accounting Manager	DANIELS, DERREK		
Legal	DUGGAN, ANDI		
For the Mayor	PICCOLO, MIKE		

Distribution List	
TWOODARD@SPOKANEAIRPORTS.NET	RSCHULTZ@SPOKANEAIRPORTS.NET

Spokane Airports 2027 Draft Budget

Spokane International Airport / Airport Business Park/ Felts Field / Transload Facility







Spokane Airport Board

Spokane International Airport / Airport Business Park / Felts Field / Transload Facility

2027 Budget Table of Contents

I. Spokane Airport Board Members. . . . 1

II. Introduction 2
Overview, Process, Summary

III. Airline Activity Forecast 6
Passengers, Landed Weight

IV. Cost Centers, Allocations, Rate Making and CPE 8

V. Terminal Rent Rate and Landing Fee . . 13

VI. Operating Revenues and Expenses . . 15

VII. Capital Improvement Program . . . 18

VIII. Debt Service 20

IX. Budget Summaries by Cost Center . . . 22
Spokane Airport Board Consolidated Summary 23
Spokane International Operations Summary . 24
Business Park Operations Summary . . 25
Felts Field Operations Summary . . 26
Transload Facility Operations Summary . 27
Capital Improvement Program . . . 28

X. Selected Rates and Charges 29

Spokane International Airport

AIRPORT BUSINESS PARK

Spokane Felts Field

RAIL-TRUCK TRANSLOAD FACILITY

Spokane Airport Board

Ezra Eckhardt (Chair)
Al French (Vice Chair)
Brooke Baker Spink (Secretary)
Andy Billig
Max Kuney
Betsy Wilkerson

David Haring, CEO
Robert Schultz, CFO
Brian Werst, General Counsel

Section II. Introduction

The Spokane Airport Board (Board), operates Spokane International Airport (SIA or GEG), Felts Field (SFF), the Airport Business Park (ABP) and the Rail-Truck Transload Facility (Transload), collectively referred to as the Spokane Airports (Airport), under and pursuant to the Constitution and Laws of the State of Washington, including Ch. 14.08 RCW, RCW 14.08.200 that certain Joint Resolution and Operating Agreement of Spokane County and the City of Spokane dated October 7, 2019.

The agreement intends the expenses of operating Spokane International Airport, Felts Field, Airport Business Park, and Rail-Truck Transload Facility shall be paid, *to the maximum extent possible*, from the operating revenues of each area (emphasis added).

The Airport does not receive any funds from either the County or City, nor does it receive any local tax revenues. Operating funds come from user fees, tenant rents in varying forms along with airline landing fees. Capital funds come from debt financing, federal and state grants and agreements, facility charges through airlines and rental car agencies along with airport funds generated through operations.

The 2027 budget provides revenue to fund the Airport's operating and capital needs while keeping the cost to airlines as reasonable as possible compared to previous years. The budget funds important capital projects that will improve airport capacity, safety and security, maintaining a strong facilities management and replacement schedule while designing new facilities focused on a unifying objective of maintaining the highest level of service to passengers and other airport customers. Through these initiatives, the budget provides funds for activities that provide economic impact and stimulus by supporting temporary and permanent job creation and associated spending on durable goods and consumables in the local area.

AIRLINE OPERATING AGREEMENT (AOA)

This 2027 budget is prepared based on the airline agreement with signatory airlines originally dated January 1, 2010. The agreement has been extended multiple times over the years, mutually by the Airport and the airlines with minor modifications, through December 31, 2028.

The Airport Airline Affairs Committee (AAAC) convened on October 12, 2026 to discuss the 2027 rates and charges. The AAAC is comprised of Airport staff members along with representatives of the Signatory and Non-Signatory Airlines. The Airline members of the AAAC do not have any formal voting rights on the Airport's budget, however they do provide input for consideration.

The amended continuing agreement, on which the 2027 budget is based, utilizes a residual rate setting method. This approach is common, but not universal, among US airport operators. A pure residual rate setting method effectively applies all operating revenues and expenses into the models that set rates charged to airlines.

The agreement continues to allow the Airport to apply a portion of operating net revenue, rather than all net operating revenue, to the calculation of rates and charges effectively allowing the Airport to retain a larger amount of generated revenue to fund capital projects beneficial to passengers, the Airport and the air carriers.

At the time of budget preparation, it is anticipated that 2026 passenger activity will exceed 2025 levels by 1.0%. 2027 passenger activity is forecasted to increase over estimated 2026 levels by 2.0%. In developing the 2027 budget, the goal is to maintain reasonable rates and charges to the airlines that will allow the Airport to continue to invest in airport facilities. Similarly, the budget supports efforts to increase airline seat capacity and frequencies while also pursuing opportunities for expansion of capacity by incumbent carriers as well as by new entrants to the market. Finally, the budget incorporates debt service into the rate base to meet requirements in the Series 2024 bond issuance.

THE BUDGET PROCESS

The budget process begins each year in July as the staff reviews the expenditures of the first six months of the current fiscal year. A budget packet was distributed including a budget calendar and general directions for each department's budget submittal. The Airport utilizes a budget process in which each expenditure line item is evaluated on its own merit each year. Specific department budgets are then developed to identify resources necessary to meet the daily functions of operating the airports and implementing the necessary airport improvement projects as well as new regulatory requirements.

Departments submitted their budgets which were loaded into the Rates and Charges Model (see Section V) to calculate the upcoming year's Terminal Rental Rates and Landing Fees. Each department's initiatives are reviewed before the proposed draft is completed and submitted for review and comment by the Board.

The Capital Improvement Program (CIP) is also refined to examine its effect on rates and charges. Future years' capital projects are added to the modeling as most of these projects and expenditures affect budget periods beyond the current period under examination.

FINANCIAL SUMMARY

The table below summarizes the 2027 consolidated Spokane Airport Board Budget. Subsequent sections and exhibits throughout this document will focus on the individual details of the summary shown.

2027	Operating	Capital	Total
GEG	$ 59,156,674	$ 86,507,889	$ 145,664,563
ABP	576,614	-	576,614
Felts Field	1,026,569	1,649,519	2,676,088
Transload	98,026	32,104	130,130
2027 Consolidated	$60,857,883	$88,189,511	$149,047,394
% Change vs 2026	5.2%	-30.9%	-19.6%

2026	Operating	Capital	Total
GEG	$ 56,339,779	$ 122,014,592	$ 178,354,371
ABP	540,674	3,325,000	3,865,674
Felts Field	845,068	1,968,425	2,813,493
Transload	100,040	300,000	400,040
2026 Consolidated	$ 57,825,561	$ 127,608,017	$ 185,433,578
$ Change vs 2026	$ 3,032,322	$ (39,418,506)	$ (36,386,184)

The total Spokane Airport Board 2026 budget presented for approval is $149,047,394, representing a 19.6% decrease over the 2026 budget. Operating expenses increased 5.2% over the last year, however, there was a 30.9% decrease in the capital budget, which offset the operating expense increase. The increase in the operating budget is related to an increase in Airport staffing levels, final portion of debt service from Series 2024 and inflationary impacts on wages, materials and supplies. The decrease in the capital budget reflects the completion of phase I of the Terminal Renovation and Expansion (TREX) program and before the main part of phase II begins in 2027. The Airport will also undertake major projects such as the parking garage expansion, economy parking lot consolidation and Spotted Road Realignment and Interchange.

Consolidated Operating Revenues are forecasted to increase to $71.8 million, an increase of 6.8% compared to the 2026 budget. SIA operating revenues are forecast to increase by 6.9% from the 2026 budget, due to the increase in forecasted rates and charges, which impacts landing fee, terminal rents and fuel flowage fees. Included in the 2027 revenue increase is a 7.3% increase in the 2027 signatory landing fee rate and a 9.9% increase in rental rates for terminal tenants.

Consolidated Operating Expenses, including debt service, are projected to increase 5.2% to $60.9 million. Operating expenses, not including depreciation and debt service, are projected to increase 7.9% over the 2026 budget to $54.2 million. This change corresponds to an increase in debt service, operating and maintenance costs with the additional square footage of Concourse C expansion and staffing levels. In addition, there are general inflationary impacts to recurring operating expenses.

The 2027 Capital Improvements Program budget represents a 30.9% decrease from the 2026 Capital Program budget. Total planned capital expenditures in 2027 are $88.2 million.

Sources of funds for capital improvements are dependent on the Federal Grant process through the Airport Improvement Program (AIP), other funds obtained through the Department of Transportation (DOT), and the Passenger Facility Charge (PFC) application process. Anticipated 2027 capital improvements projects are, or will be, funded for the upcoming year through AIP grant applications, DOT RAISE grant, Bipartisan Infrastructure Law (BIL) grants, pre-collected PFCs, bond proceeds from Series 2024, short-term financing funds, and future bond proceeds. The Airport also uses funds from general operations to the extent expenditures do not reduce the reserve amount below a minimum targeted level.

Anticipated 2027 capital improvement projects at SIA include design for the parking garage expansion, completion of the economy parking lot consolidation, Central Hall TREX construction, and start of Spotted Road Interchange construction. Felts Field anticipated projects include taxiway development and terminal remodel. As noted above, these projects are, or will be, funded by AIP, BIL, DOT and state grants, PFCs, Airport general funds and debt proceeds. The DOT and AIP grants contain a matching provision from the Airport's cash. Replacement of aging equipment and vehicles is planned in 2027 and will be funded with current year operating funds or those funds designated in prior years for projects that will be carried over to 2027.

Section III. Airline Activity Forecast

PASSENGER TRAFFIC

Outside of the pandemic impacted years, most notably 2020 through 2022, enplanement and total passenger activity have increased year over year since 2014. For budgeting purposes, the Airport assumes 2026 passenger activity will increase 1.0% over 2025. For 2027, the budget assumes enplaned passengers will increase 2.0% over 2026 levels.

The following table shows actual enplanement passenger activity by airline for 2024 and 2025 with estimates for 2026 and 2027, which are incorporated into the 2027 budget. The table also shows the current breakdown of passengers traveling out of the two terminals.

Traffic Activity
Spokane International Airport
(for the 12 months ending December 31; numbers in thousands)

	Actual 2024	Actual 2025	Estimate 2026	Budget 2027
Enplaned Passengers				
Alaska	669	698	705	724
Allegiant (non-sig)	39	38	39	39
Delta	576	568	574	590
Frontier (non-sig)	-	14	14	-
Southwest	481	475	480	494
American	194	181	183	187
United	170	196	198	202
Sun Country	5	5	5	5
Others	-	-	-	-
Total	2,133	2,176	2,198	2,242
Enplaned Passengers	2,133	2,176	2,198	2,242
% Change YoY	3.2%	2.0%	1.0%	2.0%
By Terminal				
Terminal C	863	880	889	951
Terminal A&B	1,270	1,296	1,309	1,291
Total	2,133	2,176	2,198	2,242

AIRCRAFT LANDED WEIGHT FORECAST

The Airport collects landing fees from air carriers based on an aircraft's Maximum Gross Landed Weight (MGLW). The costs of operating the airfield are recovered through the Landing Fee Rate multiplied by the MGLW of each aircraft. The accuracy of the landed weight forecast of each air and cargo carrier has an impact on the Landing Fee Rate. Section IV, which discusses Cost Centers, Allocations, Rate Making and CPE, examines the methodology of rate making under a Residual Airline Agreement in place with the airlines.

The following table shows actual passenger and cargo landed weight for 2024 and 2025 along with forecasts for 2026 and 2027, which have been incorporated into the 2027 budget. 2027 landed weight is forecasted to be above 2026 levels by 2.1% due to a continued increase in passenger carrier landed weight and a modest increase for cargo carrier landed weight.

Traffic Activity
Spokane International Airport
(for the 12 months ending December 31; numbers in thousands)

	Actual 2024	Actual 2025	Estimate 2026	Budget 2027
Landed Weight (per 1,000 lbs.)				
Passenger Airlines				
Alaska	751	802	813	830
Allegiant (non-sig)	38	41	44	45
Delta	665	661	662	675
Frontier (non-sig)	-	16	17	17
Southwest	516	526	553	564
American	210	195	211	215
United	187	218	229	233
Sun Country (non-sig)	6	6	6	6
Others	-	-	-	-
Subtotal - Passenger	2,374	2,466	2,534	2,585
% Change YoY	2.1%	3.9%	2.8%	2.0%
Cargo				
Signatory	408	360	365	374
Non-signatory	109	108	110	112
Subtotal - Cargo	517	468	474	486
Total	2,891	2,934	3,009	3,071
% Change YoY	-1.5%	1.5%	2.5%	2.1%

Section IV. Cost Centers, Allocations, Rate Making and CPE

COST CENTERS

The Airport is currently organized around seven direct cost centers with a goal to continue to refine the cost centers and allocations to them each year to provide better forecasts for rate making. The direct cost centers are Airfield (including Operations and the Fuel Facility), GEG Terminal, Parking and Ground Transportation, Other Buildings and Grounds, Rental Car Facilities, the ABP and Felts Field. There are five indirect cost centers in Planning and Development, Aircraft Rescue and Fire Fighting (ARFF), Information Technology, Police / Dispatch, and Airport Administration.

ALLOCATIONS

To develop rates, the expenses from four of the indirect costs centers, excluding administration, are allocated to the direct costs centers based on an analysis of the staff hours dedicated to a center along with the budgeted costs within each indirect cost center. After those indirect costs are allocated to the direct cost centers, administration is allocated based on the total actual direct and indirect costs for each direct cost center. The allocation percentages for 2027 are shown below. These allocation rates are reviewed annually and potentially revised at the end of each review period to reflect actual operations and maintenance for all of the facilities.

O&M Expense Allocation Percentages
Spokane Airport Board

Indirect Allocations	Airfield	Fuel	Terminal	Parking	Hangars & Buildings	QTA	ABP	Felts
Airfield Maintenance	65.0%	0.0%	0.0%	20.0%	10.0%	0.0%	0.0%	5.0%
Terminal Maintenance	0.0%	0.0%	80.0%	20.0%	0.0%	0.0%	0.0%	0.0%
Operations	90.0%	0.0%	2.5%	2.5%	0.0%	0.0%	0.0%	5.0%
Fuel	100.0%	0.0%	0.0%	0.0%	0.0%	0.0%	0.0%	0.0%
Planning & Development	40.0%	3.0%	40.0%	10.0%	1.0%	0.0%	1.0%	5.0%
IT	25.0%	0.0%	25.0%	25.0%	18.0%	0.0%	2.0%	5.0%
ARFF/Fire	73.3%	3.2%	15.9%	0.9%	4.6%	0.0%	2.1%	0.0%
Police	1.0%	0.0%	80.0%	15.0%	1.5%	0.0%	2.5%	0.0%
Communications	1.0%	0.0%	80.0%	15.0%	1.5%	0.0%	2.5%	0.0%
Airport Business Park	0.0%	0.0%	0.0%	0.0%	0.0%	0.0%	100.0%	0.0%
Felts Field	0.0%	0.0%	0.0%	0.0%	0.0%	0.0%	0.0%	100.0%

C:\0420-Spokane\DCI-Civil_ENGINEERING\2018\18-42-0007-SIA-TASK-ORDER-A-E-SERVICES\AE18-043 COST-CENTER-MAP-UPDATE\120125-C14-064_SIA.dwg, 10/9/2018 11:59:46 AM, David Landrus, None

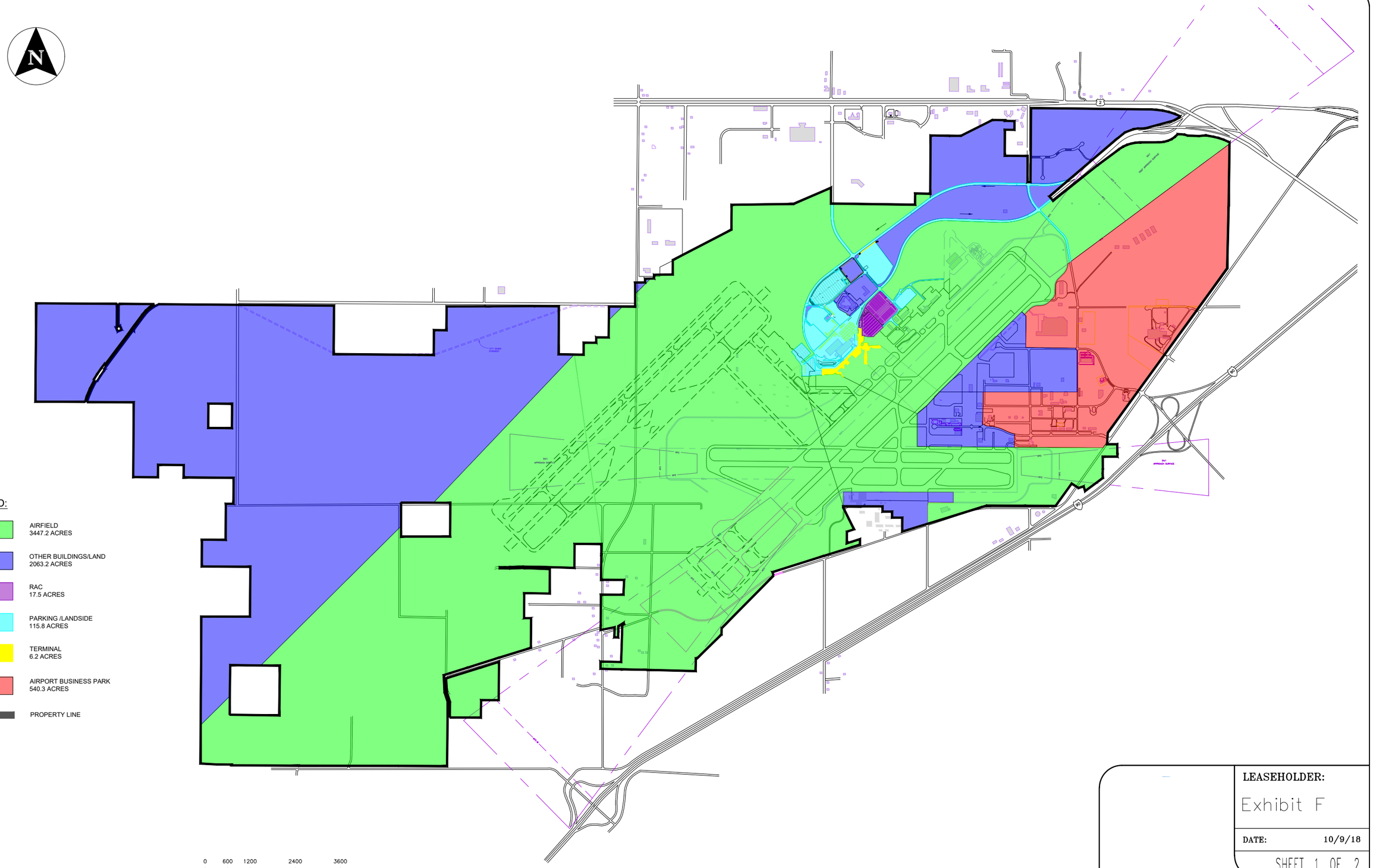

LEGEND:

- AIRFIELD 3447.2 ACRES
- OTHER BUILDINGS/LAND 2063.2 ACRES
- RAC 17.5 ACRES
- PARKING /LANDSIDE 115.8 ACRES
- TERMINAL 6.2 ACRES
- AIRPORT BUSINESS PARK 540.3 ACRES
- PROPERTY LINE

0 600 1200 2400 3600

SCALE: 1" = 1200'

NOTE: SCALE SHOWN IS FOR 22 X 34 EXHIBITS, IF PLOTTED ON 11 X 17 SCALE IS HALF SIZE.

LEASEHOLDER:

Exhibit F

DATE: 10/9/18

SHEET 1 OF 2

9000 West Airport Dr., Ste. 204
Spokane, WA 99224

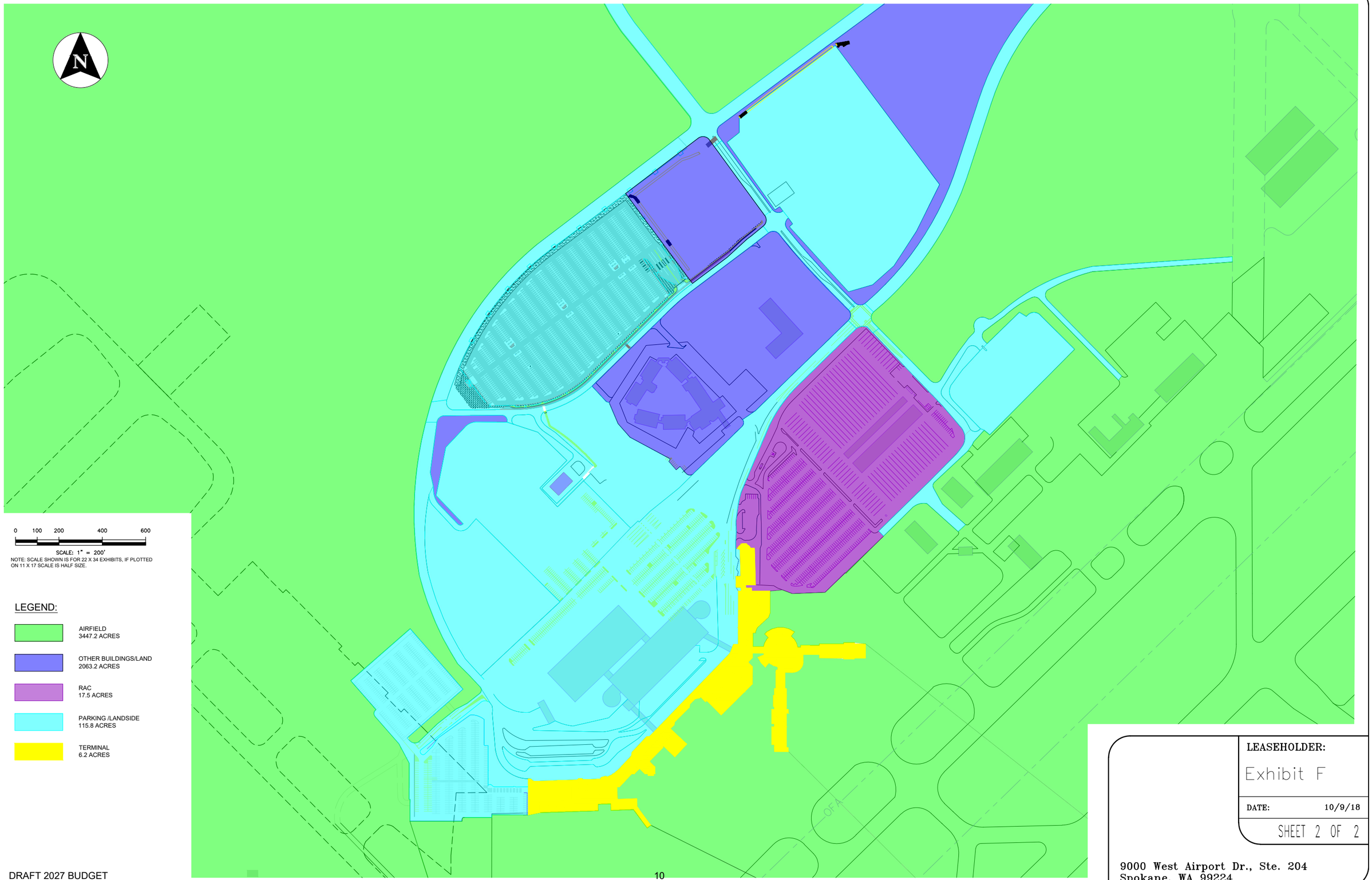

LEASEHOLDER:

Exhibit F

DATE: 10/9/18

SHEET 2 OF 2

9000 West Airport Dr., Ste. 204
Spokane, WA 99224

O:\0420-Spokane\DCI-Civil_ENGINEERING\2018\18-42-0007-SIA-TASK-ORDER-A-E-SERVICES\AE18-043 COST-CENTER-MAP-UPDATE\120125-C14-064_SIA.dwg, 10/9/2018 12:03:17 PM, David Landrus, None

RATE MAKING

The Airport operates under an existing AOA with a residual ratemaking methodology where generally, with some exceptions, all revenues are shared with the signatory air carriers. Under the current AOA there is no specified methodology for each rate making calculation, however, there are federal guidelines for establishing rates. Currently the signatory airlines participate, in a consultation role only, in the budget and rate setting process and have agreed to modifications to the rate making methodology outlined in the Introduction section under the Airline Operating Agreement (AOA).

Terminal Rental Rate Calculation

The existing AOA does not prescribe a methodology for calculating terminal building rentals, fees, and charges. However, exhibits provided annually to the air carriers with updated rates prescribes the fees and charges and the relative weighting of such charges. The Airport uses a cost center residual methodology to calculate a cost recovery terminal building rental rate.

The Terminal Building Cost includes allocable Operation and Maintenance (O&M) Expenses, debt service (net of allocable PFC or CFC revenues), debt service coverage, depreciation charges (net of bond-funded projects, grants, and PFC revenues), and reserve deposit requirements. The resulting Terminal Building Cost is reduced by Terminal Concession Revenues, Non-airline Terminal Rentals, a percentage of the estimated surplus revenue generated from the Parking/Landside cost center (with the remainder flowing into the airport residual landing fee rate), other Terminal Payments, and Loading Bridge Fees to yield the Net Terminal Building Requirement.

The Net Terminal Building Requirement is divided by Rented Space weighted by the weight classifications to derive the Terminal Building Rental Rate per square foot per year. The 2027 terminal rental rate for Class 1 space (generally public areas) is $84.07 per square foot per annum (sfpa), an increase of 9.9% from $76.48 sfpa in 2026. The calculation of the Terminal Rental Rate is displayed in Section V.

Landing Fee Calculation

The methodology for calculating the landing fee rate is based on an airport residual approach where the total cost of SIA is credited with airline terminal rentals, other airline fees and charges, non-signatory airline landing fees, and non-airline revenues to yield the landing fee revenue requirement. The landing fee requirement is then divided by signatory airline landed weight forecast to derive the landing fee rate per 1,000 pound unit.

More specifically, the methodology consists of the following steps:

1. The SIA rate base includes O&M Expenses, debt service, debt service coverage, depreciation charges (net of grants and PFC revenues), return on land investments, reserve deposit requirements, and environmental liability. The rate base also includes an amount to provide sufficient funding for the Airport's share of funding the CIP.

2. The Airfield Requirement is then reduced by airline revenues other than landing fees and non-airline revenues, and the prior year carry forward surplus (deficit) to yield the Net Landing Fee Requirement.

3. The Net Landing Fee Requirement is divided by the forecasted Total Landed Weight of passenger and cargo carriers (as weighted for premiums) to derive the Signatory Airline Landing Fee Rate per 1,000-pound unit.

The 2027 landing fee rate is $2.78 per 1,000 pounds of landed weight, an increase of 7.3% from the 2026 rate of $2.59 per 1,000 pounds. The calculation of the Landing Fee Rate is displayed in Section V.

COST PER ENPLANEMENT (CPE)

The calculations of the Terminal Rent Rate and the Landing Fee result in charges to the air carriers. Those charges contribute to both Terminal and Airfield Revenue. One measure of the cost to operate at an airport by an airline is the Cost Per Enplanement (CPE) calculation.

The average CPE represents the net cost incurred by the commercial airlines based on their regular operations at the Airport. The table below shows the actual CPE for 2024 and 2025 along with forecasts for 2026 and 2027. The 2026 estimated CPE is $7.77 compared to a budgeted CPE of $7.58, which was presented in the 2026 Budget. The 2027 budgeted CPE is $8.34 and the increase in the CPE relates to the increased operating expenses, including depreciation & debt service, that results in a slightly higher CPE despite growth in passenger activity. The Airport's CPE remains competitive compared to peer-sized airports, especially compared to other airports going through terminal expansion projects.

Airline Cost per Enplaned Passenger
Spokane International Airport
(for the 12 months ending December 31; numbers in thousands except rates)

	Actual 2024	Actual 2025	Estimate 2026	Budget 2027
Passenger Airline Payments				
Passenger Airline Signatory Landing Fees	$ 5,475	$ 5,934	$ 6,391	$ 6,997
Terminal Building Rent	7,470	8,497	9,835	10,774
Loading Bridge Fees	349	406	423	431
RON and Airfield Fees	214	273	238	281
Subtotal	$ 13,508	$ 15,111	$ 16,887	$ 18,483
Nonsignatory Passenger Landing Fees	$ 118	$ 180	$ 199	$ 218
Total Airline Revenues	$ 13,627	$ 15,290	$ 17,086	$ 18,701
Enplaned Passengers	2,133	2,176	2,198	2,242
Airline Cost per Enplaned Passenger	$ 6.39	$ 7.03	$ 7.77	$ 8.34

Section V. Terminal Rent Rate and Landing Fee Calculations

The tables below show the actual calculation of the average terminal rent rate and the airfield landing fee as described in Section IV Rate Making.

Calculation of Terminal Building Rental Rate
Spokane International Airport
(for the 12 months ending December 31; numbers in thousands except rates)

	Actual 2024	Actual 2025	Estimate 2026	Budget 2027
TERMINAL BUILDING COST				
O&M Expenses	$ 13,494	$ 14,955	$ 16,980	$ 19,081
O&M Reserve Fund Requirement	759	1,350	174	995
Debt Service (net of PFCs)	800	3,487	2,946	3,702
Debt Service Coverage	-	872	736	925
Net Depreciation Charges	2,676	2,881	1,715	1,416
Terminal Building Cost	$ 17,729	$ 23,545	$ 22,552	$ 26,119
Less: Terminal Non-Airline Revenues Associated With Rented Space				
Terminal Concession Revenues	$ (2,459)	$ (2,465)	$ (2,684)	$ (2,830)
Nonairline Terminal Rentals	(790)	(878)	(894)	(909)
Share of Parking Surplus	(8,547)	(18,024)	(14,836)	(9,756)
Other Terminal Payments	(1,694)	(1,685)	(1,741)	(1,782)
Loading Bridge Fees	(349)	(406)	(423)	(431)
Subtotal: Non-Airline Revenues Associated with Rented Space	(13,840)	(23,458)	(20,577)	(15,709)
Net Terminal Building Requirement	$ 3,890	$ 86	$ 1,975	$ 10,411
Weighted Rented Space	96	124	124	124
Charged Average Terminal Rental Rate (per sq ft per year)	**$ 66.11**	**$ 71.08**	**$ 76.48**	**$ 84.07**
Rented Space	96	124	124	124
Subtotal	$ 6,336	$ 8,803	$ 9,471	$ 10,411
Other Airline Terminal Payments [1]	364	364	364	364
Airline Terminal Rentals	$ 6,700	$ 9,166	$ 9,835	$ 10,774

1. Storage – Outside, Janitorial, Boarding Areas Walkway, Ramp - Equipment Storage, and Glycol Pad.

Calculation of Landing Fee
Spokane International Airport
(for the 12 months ending December 31; numbers in thousands except rates)

		Actual 2024	Actual 2025	Estimate 2026	Budget 2027
Landing Fee Requirement					
O&M Expenses (SIA)		$ 34,786	$ 43,364	$ 43,146	$ 51,211
Net Depreciation					
Total SIA Depreciation - Existing Assets		27,362	29,016	26,747	25,930
Less Grant, PFC and Bond Funded Assets		(17,468)	(20,191)	(18,215)	(17,909)
Net SIA Depreciation - Existing Assets		9,894	8,825	8,532	8,021
Future SAB Funded Assets (Net of AIP/PFC/GARB)		-	(0)	126	1,332
Return on Investment in Land		958	973	1,058	1,058
Additional Discretionary Cash Flow		4,000	7,000	7,000	7,000
Debt Service					
Debt Service - Future GARBs (net of PFCs)		800	3,890	5,266	6,617
Debt Service Coverage (25% of Revenue Supported)		-	973	1,317	1,654
R&R Reserve Deposit		-	2,000	2,000	2,000
O&M Reserve Deposit		1,957	3,915	443	2,671
Subtotal		$ 52,395	$ 70,940	$ 68,887	$ 81,564
Less:					
Airline Terminal Building Rent		(7,470)	(8,497)	(9,835)	(10,774)
Other Airline Revenues		(1,981)	(2,330)	(2,669)	(3,058)
Total Nonairline Revenues		(40,239)	(43,075)	(44,175)	(46,483)
Subtotal		$ 2,704	$ 17,037	$ 12,208	$ 21,248
Less Non-Operating Revenues					
Interest Income		$ (2,063)	$ (2,485)	$ (2,500)	$ (2,000)
DS Interest Income		$ -	$ -	$ (600)	$ (600)
Bond Interest Income		$ (646)	$ (3,246)	$ (1,200)	$ (60)
TOTAL LANDING FEE REQUIREMENT		$ (4)	$ 11,306	$ 7,908	$ 18,588
Plus Unfunded Pension Liability		6,000	(1,500)	(600)	(1,000)
Plus Environmental Liability		-	(1,000)	(1,750)	(2,500)
Prior Year Carry Over (Surplus)/Deficit[1]		(5,003)	(5,879)	(4,401)	(6,315)
Net Landing Fee Requirement		$ 993	$ 2,927	$ 1,158	$ 8,774
Landing Fees Paid		$ 6,872	$ 7,328	$ 7,472	
	Weighting				
Signatory Landed Weight (millions/lbs)		2,330	2,403	2,468	2,517
Signatory Cargo Landed Weight (adjusted for premium)	105%	428	378	383	393
Non-Signatory Use Agmt Landed Weight (adjusted)	115%	51	73	77	78
Itinerant Landed Weight (adjusted)	150%	164	162	164	168
Adjusted Total Landed Weight		2,973	3,016	3,092	3,156
Calculated Signatory Airline Landing Fee Rated (per 1000 lbs)[1]		**$ 0.33**	**$ 0.97**	**$ 0.37**	**$ 2.78**
Charged Signatory Airline Landing Fee Rate[1]		2.35	2.47	2.59	2.78
Charged Signatory Cargo Airline Landing Fee Rate	105%	2.47	2.59	2.72	2.92
Non-Signatory Use Agmt Landing Fee Rate	115%	2.70	2.84	2.98	3.20
Itinerant Landing Fee Rate	150%	3.53	3.71	3.89	4.17

1. Amounts over or under collected are carried forward to next year.

Section VI. Operating Revenues and Expenses

OPERATING REVENUE

Operating revenue is generated from the Airport's primary business activities and reported through the cost centers outlined earlier (Airfield, Fuel Facility, GEG Terminal, Parking and Ground Transportation, Other Buildings and Grounds, Rental Car Facilities, ABP and Felts Field). Non-Operating revenue is generated from facility charges, interest income and the periodic sale of surplus land.

Highlights:

- **Parking and Ground Transportation** revenue is estimated to increase 1.0% compared to 2026 estimate. Parking and Ground Transportation comprises 35.8% of SIA's operating revenues.
- **Fuel Facility** revenue is estimated to increase 16.8% due to the increase of the fuel flowage fee charged to users of the facility. This increase is driven by the debt service related to the expansion of the fuel facility. Fuel Facility revenue is 3.3% of SAB's operating revenue.
- **Rental Car Facilities** revenue represents 13.3% of total revenue and is estimated to increase 3.5% over the prior year budget.

This table and the chart on the next page show the main revenue sources for 2026 and 2027.

Sources of Operating Revenue

This table shows general categories of revenues as a percentage of total operating revenues

Rank	Description	Budgeted 2026	FY 2026 % of Total Rev	Year End Estimate 2026	FY 2026 % of Total Rev	Budgeted 2027	FY 2027 % of Total Rev	2027 vs. 2026 Budget $ Change	2027 vs. 2026 Budget % Change
1	Parking / Ground Transportation	25,604,903	38.1%	25,437,170	38.4%	25,692,098	35.8%	87,195	0.3%
2	Terminal	15,513,737	23.1%	15,560,810	23.5%	16,727,194	23.3%	1,213,458	7.8%
3	Rental Car Facilities	9,227,271	13.7%	9,223,275	13.9%	9,547,868	13.3%	320,597	3.5%
4	Airfield	8,269,334	12.3%	7,738,938	11.7%	9,054,198	12.6%	784,864	9.5%
5	Other Buildings & Grounds	3,714,065	5.5%	3,620,769	5.5%	4,056,304	5.7%	342,239	9.2%
6	Fuel Facility	2,008,700	3.0%	1,729,701	2.6%	2,345,890	3.3%	337,190	16.8%
7	Airport Business Park	1,511,033	2.2%	1,486,866	2.2%	1,604,000	2.2%	92,967	6.2%
8	Felts Field	898,823	1.3%	804,050	1.2%	911,500	1.3%	12,677	1.4%
9	Other Revenues	479,322	0.7%	574,201	0.9%	1,840,630	2.6%	1,361,308	284.0%
	Total Operating Revenues	$ 67,227,188	100.0%	$ 66,175,780	100.0%	$ 71,779,682	100.0%	$ 4,552,494	6.8%

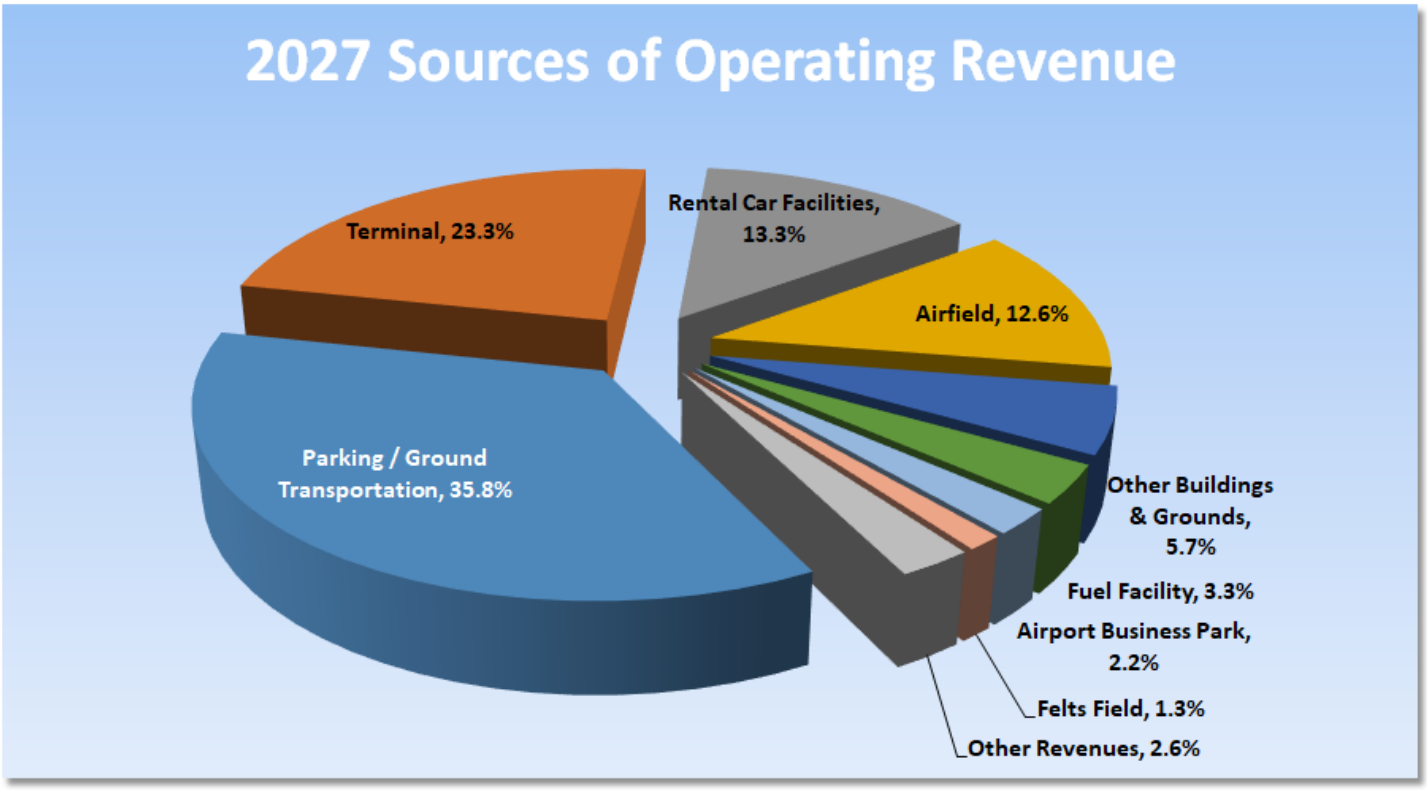

OPERATING EXPENSES

Operating expenses are incurred through normal and customary business operations of the Airport and tracked in the direct and indirect cost centers described previously. Along with the direct cost centers tracking revenue, there are five indirect cost centers in Planning and Development, Aircraft Rescue and Fire Fighting (ARFF), Information Technology, Police / Dispatch and Airport Administration. The following table and chart break down expenses into smaller categories for analysis.

Highlights:

- **Personnel Compensation and Benefits** accounts for 42.0% of total operating expenses. This expense category is budgeted at 8.9% over the prior year and is related to anticipated increases in staffing levels.

- **Ground Maintenance and Snow Control** accounts for 9.7% of total operating expenses in 2027. This expense category is budgeted at 8.8% over the 2026 budget, which was relatively lower due to a reduction in scheduled ground maintenance.

- **Utilities** account for 7.0% of total operating expenses in 2027 and represents an increase of 4.4% compared to the 2026 budget due to inflationary impacts as well as increased square footage with the completion of the Concourse C expansion.

Operating Expenditures by Rank

This table shows general categories of expenses as a percentage of total operating expenses

Rank	Description	Budgeted 2026	FY 2026 % of Total Exp	Year End Estimate 2026	FY 2026 % of Total Exp	Budgeted 2027	FY 2027 % of Total Exp	2027 vs. 2026 Budget $ Change	2027 vs. 2026 Budget % Change
1	Personnel (Incl taxes / benefits)	20,891,062	41.5%	19,611,706	43.1%	22,741,335	42.0%	1,850,273	8.9%
2	Professional Services	7,185,404	14.3%	7,770,454	17.1%	8,422,016	15.6%	1,236,613	17.2%
3	Grounds Maintenance / Snow Control	4,802,950	9.6%	2,603,753	5.7%	5,226,650	9.7%	423,700	8.8%
4	Utilities (Power/Nat. Gas/Water/Sewer)	3,625,251	7.2%	3,416,339	7.5%	3,783,150	7.0%	157,899	4.4%
5	Custodial Services & Supplies	3,218,606	6.4%	2,493,420	5.5%	2,869,027	5.3%	(349,579)	-10.9%
6	Facilities, Hangars, Bldgs	1,638,588	3.3%	1,258,744	2.8%	1,405,646	2.6%	(232,942)	-14.2%
7	Research / Planning / Engineering	1,267,895	2.5%	931,660	2.0%	1,369,882	2.5%	101,987	8.0%
8	Other Supplies	1,179,195	2.3%	1,244,434	2.7%	1,382,246	2.6%	203,051	17.2%
9	Insurances	1,157,374	2.3%	1,049,465	2.3%	1,151,262	2.1%	(6,112)	-0.5%
10	Equipment Maintenance	966,247	1.9%	835,296	1.8%	1,058,448	2.0%	92,201	9.5%
	Other Operating Expenses	4,347,522	8.6%	4,321,482	9.5%	4,732,400	8.7%	384,878	8.9%
	Total Operating Expenses	$ 50,280,095	100.0%	$ 45,536,753	100.0%	$ 54,142,063	100.0%	$ 3,861,968	7.7%

Note: Minor reclassifications have been made to prior years to conform with 2024 presentation and some totals or percentages may not add exactly due to rounding. OpEx figures do not include debt service.

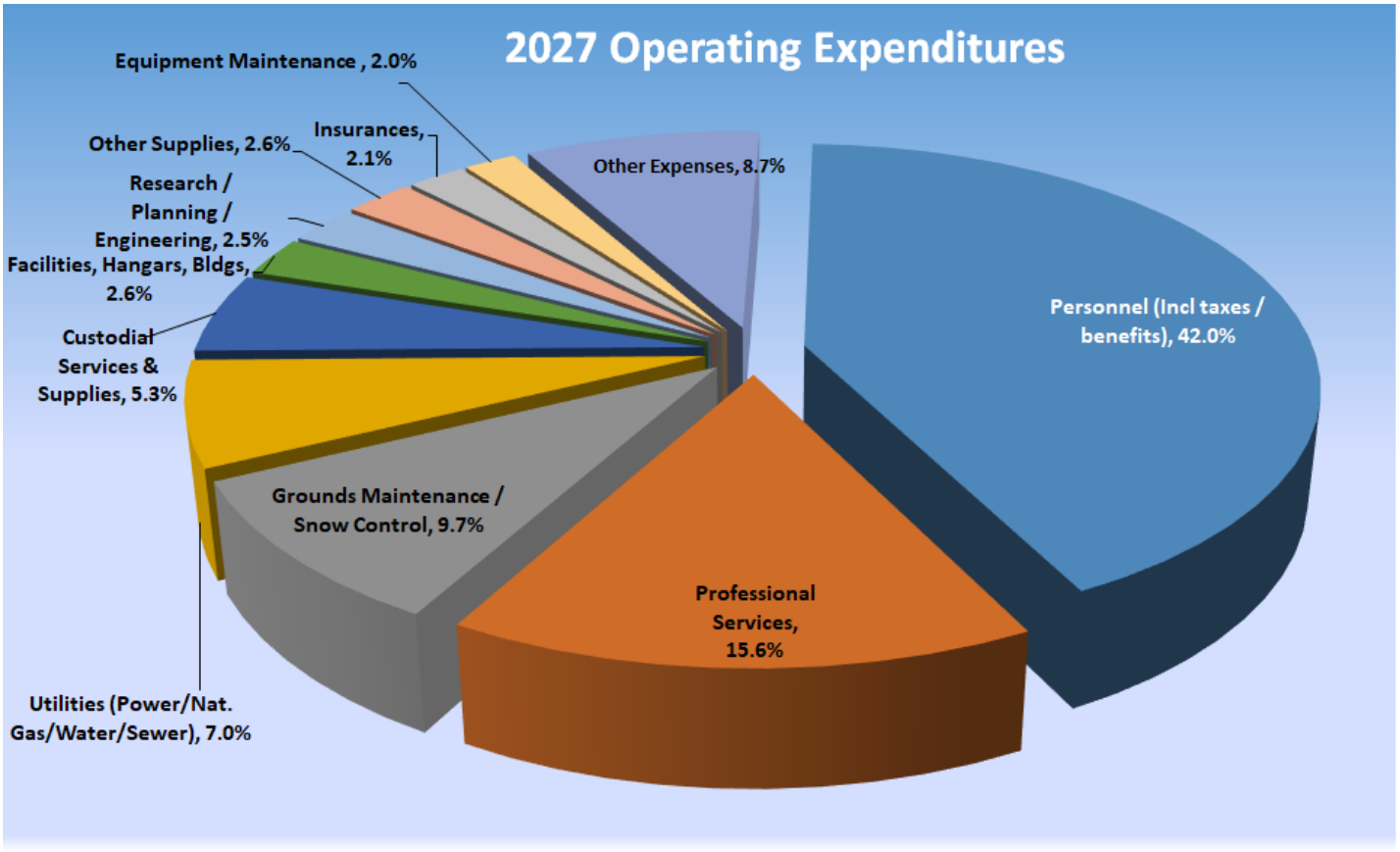

Section VII. Capital Improvement Program

The Capital Improvement Program (CIP) is developed annually and updated throughout the year. The purpose of the CIP process is to evaluate, prioritize, and coordinate proposed projects for a period of several years. Projects that may require FAA funding in the future are updated through annual consultation with the FAA. Funding for CIP projects typically comes from the FAA, DOT, and the TSA along with state grants, PFCs, debt issuances and cash generated by operation of the Airport.

The primary goal of the CIP is the development of a detailed capital budget for the current fiscal year and a flexible and rolling plan for capital development for the next several years. By updating and approving the CIP, a strategy and schedule is set for budgeting and constructing facilities at SIA, ABP, Felts Field and the Transload Facility. The Airport Board reviews and approves all major CIP projects on an individual basis.

The table below shows a summary of projects by area anticipated for 2027.

Summary of 2027 Capital Improvement Program
Spokane Airports
(for the 12 months ending December 31; numbers in thousands)

	Budget 2027		Budget 2027
CIP PROJECT COSTS		**SOURCES OF FUNDS**	
Spokane International Airport		Spokane International Airport	
		AIP - Entitlement	$ 5,270
Airfield	$ 6,967	AIP - Discretionary	238
Terminal - Other	3,205	AIP - AIG	-
Terminal - TREX	45,000	AIP - ATP	-
Parking / Landside	25,030	Federal - Other	-
Hangars & Buildings (Incl RAC)	993	GARBs	53,635
ARFF	150	PFC-Supported Bonds	6,115
IT	2,750	State Grants	-
Police	200	PFC pay-as-you-go	2,750
Fuel	475	CFC	-
Admin	1,738	SAB	18,500
Subtotal - SIA	**$ 86,508**	**Subtotal - SIA**	**$ 86,508**
Felts Field	1,650	Felts Field	1,650
Airport Business Park	-	Airport Business Park	-
Transload	32	Transload	32
Total CIP	**$ 88,190**	**Total CIP**	**$ 88,190**

Spokane Airports Capital Improvement Program

				2027 Federal Funds					2027 Bonds		2027 State	2027 Local Funds			
Project Description	**Company**	**Cost Center**	**2027**	**Discretionary FY27**	**Entitlement FY27**	**AIG FY27**	**ATP FY27**	**Other Fed FY27**	**PFC/CFC FY27**	**GARB FY27**	**State Grants FY27**	**PFC paygo FY27**	**CFC Total FY27**	**Other Local FY27**	**Airport FY27**
Central Hall TREX - Design & Construction	SIA	Terminal	45,000,000						6,114,526	38,635,474		250,000			-
Parking Garage Expansion - North Garage	SIA	Parking	15,000,000							15,000,000					-
Administrative Office Building - Design & Construction	SIA	Admin	738,229							-					738,229
Master Plan Update	SIA	Admin	1,000,000												1,000,000
Reconstruct Taxiway A - Package 1	SIA	Airfield	1,084,704	238,271											846,433
New Ground Fuel Island - Conceptual Design	SIA	Airfield	100,000												100,000
Part 1542 Fence (TSA)	SIA	Airfield	357,000												357,000
SRE New/Replace (MB5/Loader)	SIA	Airfield	2,500,000									2,500,000			-
Runway 3/21 Mill and Overlay	SIA	Airfield	300,000		270,000										30,000
Fleet Vehicles - Airfield Maintenance	SIA	Airfield	55,125												55,125
Equipment Replacement (Loader, Backhoe, Lifts, Roller)	SIA	Airfield	440,000												440,000
Equipment Procurement (High Pressure Water Blaster)	SIA	Airfield	1,500,000												1,500,000
Ramp Seal Phases	SIA	Airfield	630,000												630,000
ARFF Vehicles	SIA	ARFF	150,000												150,000
Fuel Facility Lab	SIA	Fuel	475,000												475,000
Land Acquisition - SIA	SIA	Hangars & Buildings	868,219												868,219
Central Receiving	SIA	Hangars & Buildings	125,000												125,000
Switch Replacements (Lenel Security Network)	SIA	IT	150,000												150,000
Content Management Hardware Upgrades	SIA	IT	100,000												100,000
Administrative Network Upgrades	SIA	IT	800,000												800,000
Lenel/Milestone System Redundancy/Upgrades	SIA	IT	500,000												500,000
Airline Ticket Counter TV/Computer Refresh	SIA	IT	800,000												800,000
MDF Server Replacements (ACM Network)	SIA	IT	50,000												50,000
Camera Upgrades	SIA	IT	50,000												50,000
Fiber Infrastructure Upgrades	SIA	IT	300,000												300,000
Winter Fleet Vehicles - Parking	SIA	Parking	130,000												130,000
New Parking Garage and Circulation Study (CONRAC)	SIA	Parking	75,000												75,000
Economy Parking Lot Consolidation	SIA	Parking	3,825,000												3,825,000
Spotted Road Realignment & Interchange - Design & Construction	SIA	Parking	6,000,000		5,000,000										1,000,000
Fleet Vehicles - Police	SIA	Police	200,000												200,000
Concourse A/B Baggage Handling System Upgrade	SIA	Terminal	500,000												500,000
Tenant & Operation Relocation	SIA	Terminal	2,000,000												2,000,000
Fleet Vehicles - Terminal Maintenance	SIA	Terminal	49,613												49,613
Fleet Vehicles - Terminal Ops	SIA	Terminal	65,000												65,000
Snow Equipment Replacement (Plow Trucks, Tractors)	SIA	Terminal	100,000												100,000
Carpet Replace	SIA	Terminal	200,000												200,000
Replace Chiller II, GTC	SIA	Terminal	140,000												140,000
Water Softener Terminal and C1	SIA	Terminal	100,000												100,000
Water Softener Terminal and C2	SIA	Terminal	50,000												50,000
SRE Replace Plow Truck - Felts Field	FF	Airfield	450,000												450,000
Fleet Vehicles - Felts Field Operations	FF	Airfield	60,000												60,000
Taxiway F Development - Phase 1 (Fence Relocation)	FF	Airfield	139,519	139,500											19
Felts Field Terminal Remodel	FF	Terminal	800,000											800,000	-
Camera Upgrades - Felts Field	FF	IT	200,000												200,000
Rail - Truck Transload Facility (Phase 4) - rail and spur	Transload	Hangars & Buildings	32,104												32,104
TOTAL Spokane Airports Capital Improvement Program			**$ 88,189,511**	**377,771**	**5,270,000**	**-**	**-**	**-**	**6,114,526**	**53,635,474**	**-**	**2,750,000**	**-**	**800,000**	**19,741,741**

Section VIII. Debt Service

Prior to 2024, the Airport had no outstanding long-term debt. The Airport issued long-term debt in November 2024 to pay for certain CIP projects outlined in the exhibit below. The Airport obtained credit ratings from Standard & Poor's (S&P) and Moody's in September 2024 and received a rating of 'A' and 'A2', respectively, both with stable outlooks.

The debt service calculation for 2024 and 2025, along with forecasts for 2026 and 2027, is shown below. The Airport expects to use PFC funds to pay a portion of the annual debt service associated with the 2024 Series. In addition, the debt service coverage ratio is included and illustrates the Airport's ratio is well above the required coverage of 1.25x.

Debt Service by Series and Cost Center
Spokane International Airport
(for the 12 months ending December 31; numbers in thousands)

	Actual 2024	Actual 2025	Estimate 2026	Budget 2027
Revenue-Supported Bonds Debt Service				
Concourse C TREX	$ -	$ 3,487	$ 2,316	$ 2,911
Administration Office Building	-	-	1,851	2,326
New Fuel Tank	-	-	377	474
Parking Improvements	-	403	721	906
North Garage Expansion	-	-	-	-
Central Hall TREX Enabling Projects		-	-	-
Central Hall TREX 2028 Bonds				
Central Hall TREX 2029 Bonds	-	-	-	-
Total Revenue-Supported	-	3,890	5,266	6,617
PFC-Supported Debt Service				
CCC TREX (2024 Bonds)		2,279	2,279	2,276
CH TREX		-	-	-
Total Annual Debt Service	$ -	$ 6,169	$ 7,545	$ 8,893
Less: PFCs Available for Debt Service				
PFC-Supported Bonds		$ (2,279)	$ (2,279)	$ (2,276)
Incremental for CH TREX		-	-	-
Total PFCs Available for Debt Service	-	(2,279)	(2,279)	(2,276)
Annual Debt Service Net of PFCs	$ -	$ 3,890	$ 5,266	$ 6,617
County Loan Accrued Interest	$ 800			
Total Debt Service	$ 800	$ 6,169	$ 7,545	$ 8,893
Revenue Supported Bond Debt Service By Cost Center				
Airfield	$ -	$ -	$ 629	$ 791
Fuel	-	-	377	474
Terminal	800	3,487	2,946	3,702
Parking	-	403	1,277	1,604
Other Buildings & Grounds	-	-	37	47
QTA	-	-	-	-
Airport Business Park	-	-	-	-
Felts Field	-	-	-	-
Total	$ 800	$ 3,890	$ 5,266	$ 6,617

Debt Service Coverage
Spokane International Airport
(for the 12 months ending December 31; numbers in thousands except rates)

	Actual 2024	Actual 2025	Estimate 2026	Budget 2027
Debt Service Coverage per Master Resolution				
Revenues	$ 61,815	$ 69,653	$ 70,918	$ 74,545
Less: O&M Expenses	(36,581)	(44,643)	(45,578)	(54,241)
Net Revenues	$ 25,234	$ 25,010	$ 25,340	$ 20,304
Plus Coverage Amount	-	973	1,317	1,654
Available Net Revenues for Debt Service	$ 25,234	$ 25,983	$ 26,656	$ 21,958
Annual Debt Service (Senior Bonds)	$ -	$ 6,169	$ 7,545	$ 8,893
Less: PFCs Available for Debt Service	-	(2,279)	(2,279)	(2,276)
Subordinate Obligation Debt Service	800	-	-	-
Total Debt Service net of PFCs	$ 800	$ 3,890	$ 5,266	$ 6,617
Debt Service Coverage - Senior Bonds				
Without Coverage Amount		6.43	4.81	3.07
With Coverage Amount		6.68	5.06	3.32

Section IX. Budget Summaries by Cost Center

- **Spokane Airport Board Consolidated Summary**
- **Spokane International Operations Summary**
- **Business Park Operations Summary**
- **Felts Field Operations Summary**
- **Transload Facility Operations Summary**
- **Capital Improvement Program**



SPOKANE AIRPORT BOARD

2027 BUDGET SUMMARY

	2024 Actual	2025 Actual	2026 Projected	2027 Budget	% Change '27 vs '26
Operating Revenues					
Spokane International	$ 56,561,888	$ 61,132,397	$ 63,884,864	$ 69,089,182	
Airport Business Park	1,453,257	1,503,324	1,486,866	1,604,000	
Felts Field	891,381	889,277	804,050	911,500	
Transload Facility	-	-	38,750	175,000	
Total Operating Revenues	58,906,526	63,524,998	66,214,530	71,779,682	8.4%
Other Sources					
Spokane International	2,062,960	2,484,702	2,500,000	2,660,000	
Airport Business Park	40,945	62,198	76,416	70,000	
Felts Field	28,173	90,830	57,326	35,000	
Transload Facility	-	-	-	-	
(To) / From Reserves	(24,529,566)	(17,698,477)	(18,003,923)	(13,686,800)	
Total Other Sources	(22,397,488)	(15,060,747)	(15,370,181)	(10,921,800)	
Total Operating / Other Sources	$ 36,509,038	$ 48,464,251	$ 50,844,349	$ 60,857,882	19.7%
Operating Expenses					
Spokane International	$ 35,494,467	$ 44,149,074	$ 44,308,128	$ 52,539,636	18.6%
Airport Business Park	502,581	(220,189)	491,116	576,614	
Felts Field	478,503	609,627	739,409	1,026,569	
Transload Facility	33,487	35,448	39,471	98,026	
Total Operating Expenses	36,509,038	44,573,960	45,578,124	54,240,845	19.0%
Debt Service					
Spokane International	-	3,890,291	5,266,225	6,617,038	
Airport Business Park	-	-	-	-	
Felts Field	-	-	-	-	
Transload Facility	-	-	-	-	
Total Debt Service	-	3,890,291	5,266,225	6,617,038	
Operating & Debt Service	36,509,038	48,464,251	50,844,349	60,857,882	19.7%
Non-Cash Depreciation					
Spokane International	13,937,413	16,166,802	9,162,004	8,435,891	
Airport Business Park	675,088	677,199	674,778	606,066	
Felts Field	1,249,780	1,309,221	1,320,359	1,308,204	
Transload Facility	-	-	98,520	236,447	
Total Non-Cash Depreciation	15,862,281	18,153,222	11,255,661	10,586,608	
Total Operating / Other Expenditures	$ 52,371,319	$ 66,617,474	$ 62,100,010	$ 71,444,490	15.0%
Capital Sources					
Spokane International	89,643,484	91,313,990	113,567,652	86,507,889	
Airport Business Park	88,875	277,810	4,725,000	-	
Felts Field	1,962,570	818,880	3,500,387	1,649,519	
Transload Facility	-		-	32,104	
	$ 91,694,930	$ 92,410,680	$ 121,793,039	$ 88,189,511	-27.6%
Capital Expenditures					
Spokane International	89,643,484	91,313,990	113,567,652	86,507,889	
Airport Business Park	88,875	277,810	4,725,000	-	
Felts Field	1,962,570	818,880	3,500,387	1,649,519	
Transload Facility	-		-	32,104	
	$ 91,694,930	$ 92,410,680	$ 121,793,039	$ 88,189,511	-27.6%
Consolidated Sources	$ 128,203,967	$ 140,874,931	$ 172,637,388	$ 149,047,393	-13.7%
Consolidated Expenditures	$ 128,203,967	$ 140,874,931	$ 172,637,388	$ 149,047,393	-13.7%

SPOKANE INTERNATIONAL AIRPORT

2027 OPERATIONS BUDGET SUMMARY

	2024 Actual	2025 Actual	2026 Projected	2027 Budget	% Change '27 vs '26
Operating Revenues					
Parking / Ground Transportation	$ 22,722,178	$ 24,893,411	$ 25,437,170	$ 25,692,098	1.0%
Airfield	7,085,972	7,599,803	7,738,938	9,054,198	
Fuel Facility	1,418,107	1,651,086	1,729,701	2,345,890	
Other Buildings & Grounds	3,527,376	3,629,965	3,620,769	4,056,304	
Terminal	12,762,838	13,931,292	15,560,810	16,727,194	
Rental Car Facilities	8,660,967	9,071,829	9,223,275	9,547,868	
Other Revenues	384,450	355,011	574,201	1,665,630	
Total Operating Revenue	$ 56,561,888	$ 61,132,397	$ 63,884,864	$ 69,089,182	8.1%
Operating Expenses					
Parking / GTC / Landside	4,818,419	5,681,205	5,426,190	6,954,948	
Airfield & Operations	7,832,339	11,817,963	7,771,515	9,730,432	
Fuel Facility	499,957	556,136	685,834	852,939	
Other Buildings & Grounds	312,372	470,300	340,699	1,317,423	
Terminal	8,079,776	8,171,058	8,214,413	9,670,710	
Rental Car Facilities	496,241	519,175	474,120	442,468	
Other Indirect Centers					
Engineering	798,816	2,796,451	4,996,162	5,375,765	
Fire	2,426,276	2,788,950	3,164,918	3,138,414	
Information Technology	1,213,198	1,328,888	1,211,554	1,411,424	
Police	1,798,475	2,608,494	2,708,958	3,056,646	
Communication	1,161,969	1,232,275	1,390,595	1,474,554	
General Administration	6,056,629	6,178,179	7,923,170	9,113,913	
Sub-Total Operating Expenses	35,494,467	44,149,074	44,308,128	52,539,636	18.6%
Revenues over Expenses pre Deprec	$ 21,067,421	$ 16,983,323	$ 19,576,736	$ 16,549,546	
Gross Depreciation	31,405,577	36,224,305	27,243,792	26,211,593	
Credit for Funded Assets	(17,468,164)	(20,057,503)	(18,081,788)	(17,775,702)	
Net Depreciation	13,937,413	16,166,802	9,162,004	8,435,891	
Revenues over Expenses incl Deprec	$ 7,130,008	$ 816,521	$ 10,414,732	$ 8,113,655	
Other Sources Available / (Used)					
Interest Income	2,062,960	2,484,702	2,500,000	2,660,000	
Debt Interest	-	-	-	-	
Total Other Sources Available	2,062,960	2,484,702	2,500,000	2,660,000	6.4%
Available for Debt / Projects / Reserves	9,192,968	3,301,223	12,914,732	10,773,655	-16.6%
Total Debt Principal	-	-	(5,266,225)	(6,617,038)	
Sources over (Expenses)	$ 9,192,968	$ 3,301,223	$ 7,648,507	$ 4,156,618	

AIRPORT BUSINESS PARK

2027 OPERATIONS BUDGET SUMMARY

Operations Revenues	2024 Actual	2025 Actual	2026 Projected	2027 Budget	% Change '27 vs '26
Building / Office Leases	$ 1,077,927	$ 1,111,785	$ 1,043,134	$ 1,071,000	
Land Leases	375,330	391,539	443,732	533,000	
Miscellaneous	-	-	-	-	
Total Operating Revenues	$ 1,453,257	$ 1,503,324	$ 1,486,866	$ 1,604,000	7.9%
Operating Expenses					
Buildings	$ 222,456	$ 209,806	$ 179,274	$ 220,029	
Grounds	100,617	(702,194)	113,969	120,853	
General Administration	179,508	272,199	197,873	235,732	
Total Operating Expenses	502,581	(220,189)	491,116	576,614	17.4%
Revenues over Expenses (Pre Deprec)	$ 950,676	$ 1,723,513	$ 995,750	$ 1,027,386	
Depreciation	675,088	677,199	674,778	606,066	
Operating Revenue over (Expense)	$ 275,588	$ 1,046,314	$ 320,972	$ 421,320	
Other Sources Available / Used					
Interest Income	40,945	62,198	76,416	70,000	
Interest Expense	-	-	-	-	
Other Non-Operating Income (Expense)	-	-	-	-	
Total Other Sources Available	40,945	62,198	76,416	70,000	
Available for Debt / Projects / Reserves	316,533	1,108,512	397,388	491,320	
Total Debt Principal	-	-	-	-	
Sources over Expenditures incl Deprec	$ 316,533	$ 1,108,512	$ 397,388	$ 491,320	

FELTS FIELD

2027 OPERATIONS BUDGET SUMMARY

Operating Revenues	2024 Actual	2025 Actual	2026 Projected	2027 Budget	% Change '27 vs '26
Airfield	$ 56,123	$ 60,842	$ 49,776	$ 61,000	
Hangars/ Bldgs / Land	806,996	822,610	754,274	823,000	
Terminal	28,262	5,825	-	27,500	
Miscellaneous	-	-	-	-	
Total Revenues	$ 891,381	$ 889,277	$ 804,050	$ 911,500	13.4%
Operating Expenses					
Airfield	$ 121,014	$ 102,587	$ 194,336	$ 238,406	
Hangars/ Bldgs / Land	46,902	51,690	84,483	226,863	
Terminal	70,115	72,261	66,358	72,420	
General Admin	240,472	383,089	394,232	488,880	
Total Expenses	478,503	609,627	739,409	1,026,569	38.8%
Revenue / (Expense) Pre Depreciation	$ 412,878	$ 279,650	$ 64,641	$ (115,069)	
Depreciation	2,166,576	2,226,017	2,199,845	2,185,896	
Credit for Funded Assets	(916,795)	(916,795)	(879,486)	(877,692)	
Net Depreciation	1,249,780	1,309,221	1,320,359	1,308,204	
Revenue / (Expense) incl Depreciation	$ (836,902)	$ (1,029,571)	$ (1,255,718)	$ (1,423,273)	
Cash Available for Debt Service	$ 412,878	$ 279,650	$ 64,641	$ (115,069)	
Interest and Other Income	28,173	90,830	57,326	35,000	
Available for Debt / Projects / Reserves	441,051	370,480	121,967	(80,069)	
Debt Service	-	-	-	-	
Expenses over Sources	$ 441,051	$ 370,480	$ 121,967	$ (80,069)	

TRANSLOAD FACILITY

2027 OPERATIONS BUDGET SUMMARY

Operating Revenues	2024 Actual	2025 Actual	2026 Projected	2027 Budget	% Change '27 vs '26
Leased Land			$ 38,750	$ 175,000	
Total Revenues	$ -	$ -	$ 38,750	$ 175,000	351.6%
Operating Expenses					
Other Buildings and Grounds	$ 33,487	$ 22,129	$ 39,471	$ 58,026	
General Admin	-	13,319	-	40,000	
Total Expenses	33,487	35,448	39,471	98,026	148.3%
Revenue / (Expense) Pre Depreciation	$ (33,487)	$ (35,448)	$ (721)	$ 76,974	
Depreciation	-	-	499,530	1,198,871	
Credit for Funded Assets	-	-	(401,010)	(962,424)	
Net Depreciation	-	-	98,520	236,447	
Revenue / (Expense) incl Depreciation	$ (33,487)	$ (35,448)	$ (99,241)	$ (159,473)	
Cash Available for Debt Service	$ (33,487)	$ (35,448)	$ (721)	$ 76,974	
Interest and Other Income					
Available for Debt / Projects / Reserves	(33,487)	(35,448)	(721)	76,974	
Debt Service	-	-	-	-	
Expenses over Sources	$ (33,487)	$ (35,448)	$ (721)	$ 76,974	

SPOKANE AIRPORT BOARD

2027 CAPITAL SUMMARY

	2024 Actual	2025 Actual	2026 Projected	2027 Budget
SPOKANE INTERNATIONAL AIRPORT				
SOURCES OF FUNDS				
Federal AIP Grants	29,182,055	28,568,932	39,492,837	5,508,271
Other Federal Grants / Funds	-	936,851	1,000,000	-
Other State / Local Funds	363,802	361,395	374,803	-
Available / Used PFC Collections and Interest	6,638,672	2,575,287	3,711,794	2,750,000
Revenue Bonds / PFC Supported	39,851,660	38,459,904	51,654,294	59,750,000
Available CFC Collections	741,819	9,054,704	285,526	-
Other Funds	-	55,224	-	
Funds From Operations, Unrestricted Cash	12,865,477	11,301,693	17,048,397	18,499,619
Total Sources	**89,643,484**	**91,313,990**	**113,567,652**	**86,507,889**
EXPENDITURE OF FUNDS				
Parking / Ground Transportation	7,964,368	7,921,297	4,926,633	19,030,000
Landside Roadways	671,480	1,030,200	1,200,000	6,000,000
Airfield / Ops / Fuel	23,774,201	20,198,178	37,723,322	7,441,829
Other Buildings & Grounds	444,412	1,605,006	374,803	125,000
Terminal	53,999,560	48,731,200	36,964,018	48,204,613
ARFF	16,885	1,546,892	204,323	150,000
I.T.	60,730	128,963	2,727,524	2,750,000
Police / Security	185,817	87,062	-	200,000
Admin	2,178,478	9,796,648	27,747,028	1,738,229
Land Acquisitions	347,552	268,543	1,700,000	868,219
Total Expenditures	**89,643,484**	**91,313,990**	**113,567,652**	**86,507,889**
AIRPORT BUSINESS PARK				
SOURCES OF FUNDS				
Funds From Operations & Unrestricted Cash	88,875	277,810	4,725,000	-
Total Sources	**88,875**	**277,810**	**4,725,000**	**-**
EXPENDITURE OF FUNDS				
Total Capital Projects	88,875	277,810	4,725,000	-
Total Expenditures	**88,875**	**277,810**	**4,725,000**	**-**
FELTS FIELD				
SOURCES OF FUNDS				
Federal AIP Grants	79,327	188,795	558,000	139,500
Other Grants	789,396	95,323	-	-
Debt or Other Funds		288,451	2,030,387	800,000
Funds From Operations & Unrestricted Cash	1,093,847	246,311	912,000	710,019
Total Sources	**1,962,570**	**818,880**	**3,500,387**	**1,649,519**
EXPENDITURE OF FUNDS				
Airfield	98,049	198,906	875,000	649,519
Other Buildings / Grounds	-	-	-	-
Terminal	202,249	385,545	2,295,387	1,000,000
Parking	1,662,272	234,429	-	-
Land Acquistions	-	-	330,000	-
Total Expenditures	**1,962,570**	**818,880**	**3,500,387**	**1,649,519**
TRANSLOAD FACILITY				
SOURCES OF FUNDS				
State Grants	-	2,106,000	-	-
Federal Grants	1,073,865	-	-	-
Funds From Operations & Unrestricted Cash	315,182	3,560,594	20,000	32,104
Total Sources	**1,389,048**	**5,666,594**	**20,000**	**32,104**
EXPENDITURE OF FUNDS				
Total Capital Projects	1,389,048	5,666,594	20,000	32,104
Total Expenditures	**1,389,048**	**5,666,594**	**20,000**	**32,104**

Note: The expenditures noted above do not necessarily represent specific projects, rather a variety of projects in a category that will be individually vetted by the Airport Board through the Committee process prior to authorization of expending of funds.

Exhibit X

Spokane Airport Board - Spokane International Airport and Felts Field

Selected 2027 Rates & Charges List

Effective Date: January 1, 2027

Space rates shown on a square foot per annum basis
Other rate basis are noted
(This list is not meant to be all inclusive.)
Change from 2026

Spokane International Airport	Signatory	Cargo Exempt*	w/ Use Agreement	Itinerant
Class 1 Space				
Airline Ticket Counters	$ 84.07			
Airline Ticket Office (ATO)	84.07			
Queuing Areas	84.07			
Instant Travel Machines	84.07			
Concourse Hold Areas	84.07			
Baggage Claim	84.07			
Class 2 Space				
Baggage Service (BOS)	$ 63.05			
Upper Concourse Office	63.05			
Ops Office	63.05			
Communications Office	63.05			
Baggage Make-Up	63.05			
Baggage Delivery	63.05			
Lower Concourse Office	63.05			
Storage Room	63.05			
Maintenance Office	63.05			
Baggage Cabinet	63.05			
Triturator Building	63.05			
Loading Bridge / mo	$ 2,658.33			
Aircraft Parking / mo	$ 500.00			
Ramp GSE Storage	$ 5.76			
Glycol Pad	$ 5.76			
Outside Storage	$ 1.06			
Truck Stairs - per use	$ 140.00			
Air Cargo Building	$ 15.87			
Landing Fee / 1,000 lbs	$ 2.78	$ 2.92	$ 3.20	$ 4.17
Non Leased Loading Bridge / full turn	484.00		484.00	484.00
{Includes NON Leased Loading Bridge, A/C Parking, Concourse holding area}				
Non Leased Baggage System / turn	163.00		163.00	163.00
{Includes both baggage make-up for outbound AND baggage claim for inbound}				
Non Leased Ticketing / use	54.00		54.00	54.00
{Includes NON Leased Ticket Counter Only}				
Non Leased Aircraft Parking / use	130.00	137.00	150.00	195.00
{Includes NON Leased Aircraft Parking area away from a Bridge}				
Fuel Flowage Fee / Gallon	0.080	0.080	0.090	0.105

***Cargo Exempt:** Cargo Carriers with on-airfield ramp & operation facilities

Exhibit X

Spokane Airport Board - Spokane International Airport and Felts Field

Selected 2027 Rates & Charges List

Effective Date: January 1, 2027

Space rates shown on a square foot per annum basis
Other rate basis are noted
(This list is not meant to be all inclusive.)
Change from 2026

Spokane International General Aviation	
Non Lease Aircraft Parking / day	
Single Engine Aircraft	$ 25.00
Multi Engine / Small Jet	35.00
Q-400 / EJ / RJ or Greater	50.00

Use Agreement / month	
SIA	$ 100.00
Felts Field	40.00

Felts Field Rates	
Landing Fee / 1000 lbs	$ 2.50
Non Lease Aircraft / day	25.00
T-Hangar / mo	320.00
Tie-Down / mo	35.00
Fuel Flowage / Gallon	0.105

Miscellaneous Items (not incl. applicable taxes)	
Security Badge Only	$ 30.00
Badge Renewal or Fingerprinting	40.00
New Badge & Fingerprinting	60.00
1st Lost Badge	30.00
2nd Lost Badge	40.00
3rd Lost Badge	60.00
Telephone Line / mo	12.00
GTC Trip Fee / Trip - Tier I	2.50
GTC Trip Fee / Trip - Tier II	3.00
GTC Trip Fee / Trip - Tier III	7.00

Force Account Rates	
Equipment Rentals	Cost + 10%
Materials	Cost + 10%
Labor / hr.	$ 85.00

ALL VEHICLE PARKING LOT RATES INCLUDE WA STATE SALES TAX					
Parking (Sales Tax Included)	**Covered**	**Outside**			
Length of Stay	**Garage**	**Surface**	**C-Lot**	**Economy**	**Hourly**
0 - 2 HR	$ 5.00	$ 5.00	$ 5.00	$ 8.00	$ 2.00 / HR
2 - 3 HRS	8.00	8.00	8.00		
3 - 4 HRS	11.00	11.00	11.00		
4 - 5 HRS	14.00				
5-24 HRS	18.00				
DAILY MAX.	**$ 18.00**	**$ 11.00**	**$ 11.00**	**$ 8.00**	

Miscellaneous Vehicle Parking	
Employee Lots / mo	$ 30.00
Employee Surface Lot / mo	130.00
Employee Garage Parking / mo	200.00
Passport / Executive / mo	300.00
Vendor / Contractor Parking / veh / year	50.00
Transponder Replacement	50.00
ALL VEHICLE PARKING INCLUDES WSST	

Notes: Certain other terminal and leasehold rental rates are set in conjunction with the Airline Operating Agreement (AOA) provisions while others are set by Fair Market Value appraisals. Rental Car and Concession rates are determined through negotiation and Request for Proposal (RFP) processes. Equipment rentals and other rates are available upon request.

Spokane Airports 2027 Draft Budget

Spokane International Airport / Airport Business Park / Felts Field / Transload Facility



www.spokaneairports.net

Approved:
Spokane Airport Board, October 2026



Spokane
International Airport

2027 Budget - Spokane Airport Board

November 2026

2027 Budget Overview and Timeline

- ✈ As financially self-sufficient as possible (FAA grant assurance 24)
- ✈ Operating funds come only from airport system users, Airport does not receive tax revenue
- ✈ Revenue generated by Airport must be spent on Airport purposes (FAA grant assurance 25)

- ✈ October 12th – Consultation with Airport Airline Affairs Committee (AAAC)
  - Current agreement expires December 31, 2028
  - Presented 2027 Rates and Charges
- ✈ October 14th – Airport Finance Committee review
- ✈ October 22nd – Airport Board approval
- ✈ November 3rd – Board of County Commissioners briefing
- ✈ November 10th – City Council briefing

New Rates Effective January 1, 2027

Passenger Traffic Assumption – modest growth in 2027

- ENPLANED PASSENGERS
  - 2026 trending toward another record year
  - Assuming a modest growth rate of 2.0% in 2027
  - Alaska, Delta and Southwest have the largest share of passengers

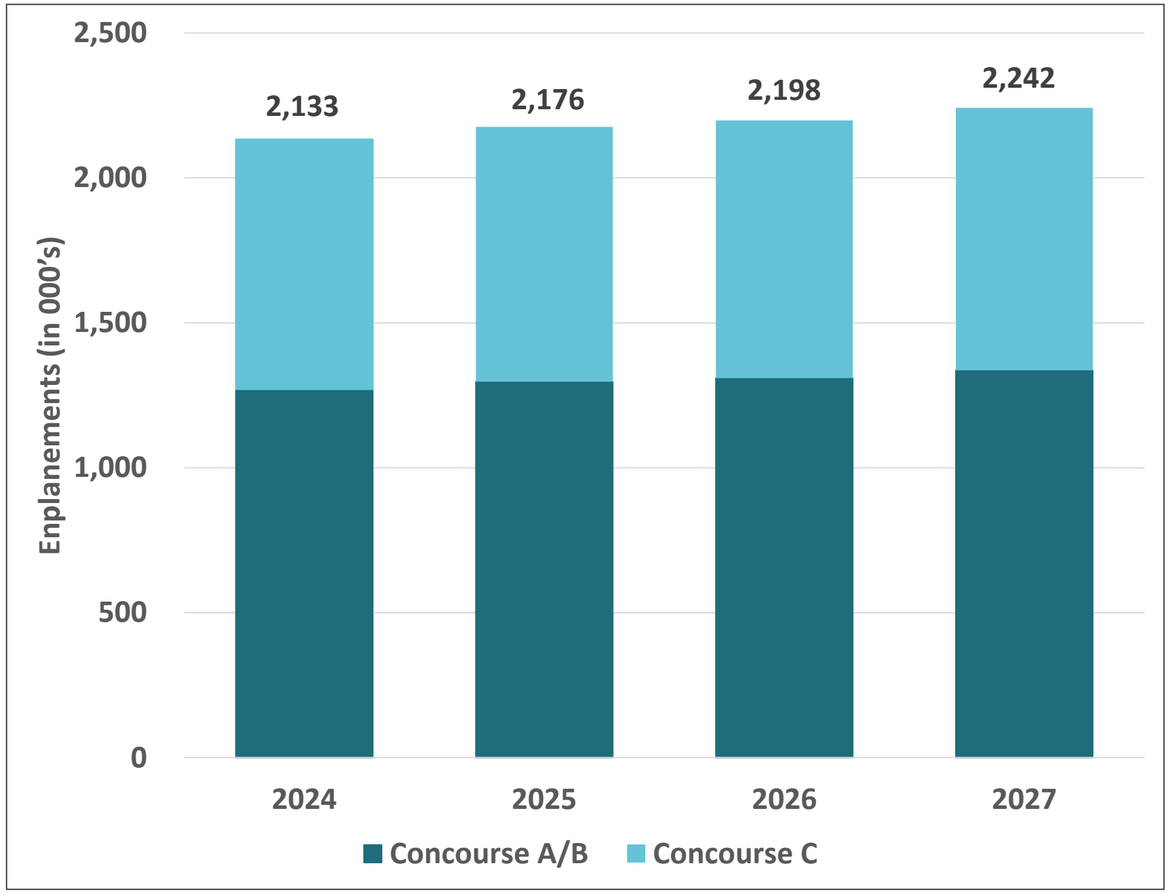

- LANDED WEIGHTS (in 000s)
  - Total Landed Weight is forecasted to increase due mainly to passenger carrier activity
  - Assumes growth rate of 2.1% for 2027
  - Passenger carriers account for 84.2% of landed weight

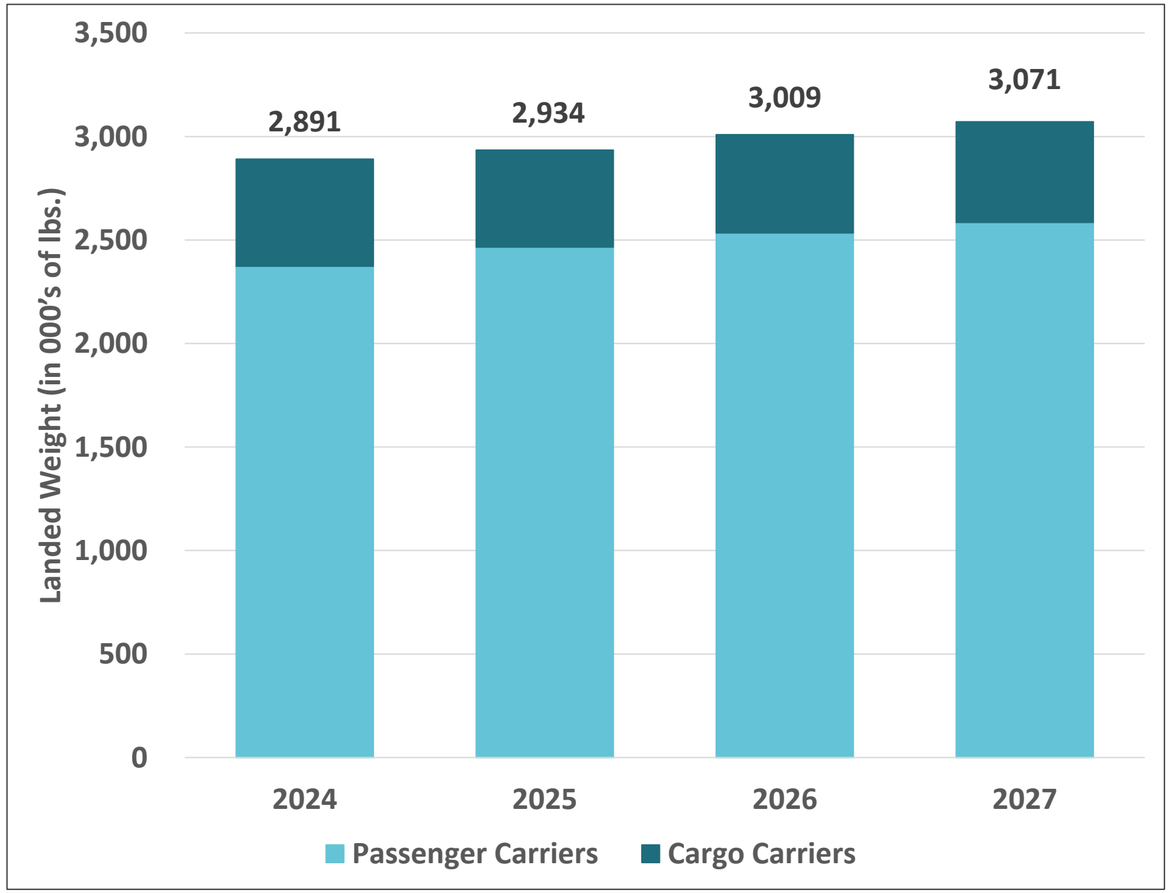

Notable Budget Highlights for Spokane International Airport

- Operating Expense Summary
  - Total operating budget of $52.5M (not including depreciation)
  - Represents a 7.7% increase over 2026 budget
  - Increases in staffing levels throughout the organization, impacting wages and benefits
  - Increase in utilities, custodial expenses and general maintenance due to increase in square footage of Concourse C
  - Increase in deicing/snow removal costs
  - Increase in administrative expenses such as marketing and strategic planning study

2027 Capital Improvement Program – Sources and Uses

- 2027 Capital Budget – $88.2M
  - Central Hall TREX – construction of Concourse C temporary baggage claim, completion of enabling utility work, and demolition of existing portion of terminal
  - Parking Garage Expansion – selection of contractor for Progressive Design Build (PDB) contract, kickoff project design
  - Spotted Road Interchange – construction to begin Q2 2027
  - Surface Parking Improvements – completion of Economy Lot 1 Consolidation

- 2027 Capital Funding Sources
  - Federal & State Grants (AIP, BIL, RAISE, other): $5.6M
  - PFC/CFC/Other Local Funds: $3.6M
  - Bond Proceeds: $59.8M
  - Airport Cash Reserves: $19.2M

  (SIA has adequate cash reserves to fund this level of investment)

Debt Service and Bond Covenants

- Amount of debt service from Series 2024 increases in 2027
- Airport unable to charge debt service to airlines for projects not in use
- Debt service impacting the airlines' rate base increases by ~$1.3M
- Outstanding bonds are backed only by Airport revenue

- Series 2024 issuance has required rate covenants Airport needs to satisfy:
  - ☑ Establish rate structure that covers all O&M expenses for the fiscal year
  - ☑ Include debt service due during the fiscal year into rate base
  - ☑ Debt service reserve fund is adequately funded (no additional amt needed in FY27)
  - ☑ Required coverage amount of 1.25x annual debt service amount; increase for FY27 is included in the rate base

2027 Consolidated Budget Summary

- Operating and capital budget total is $149.0M
- Overall, budget is decreasing by 19.6% compared to the 2026 budget
- Operating expenses are increasing 5.2% over the 2026 budget
- Capital budget is decreasing 30.9% compared to 2026
- Overall, Airport is proposing a balance budget and is not requesting funds from Airport sponsors

SPOKANE AIRPORT BOARD

2027 BUDGET SUMMARY

CONSOLIDATED		2026
Spokane International Airport	$ 145,664,563	-18.3%
Airport Business Park	576,614	-85.1%
Felts Field	2,676,088	-4.9%
Rail-Truck Transload Facility	130,130	N/A
Total	$ 149,047,395	-19.6%

2026	OPERATING EXPENSES	
5.0%	**Spokane International Airport**	$ 59,156,674
6.6%	**Airport Business Park**	576,614
21.5%	**Felts Field**	1,026,569
N/A	**Rail-Truck Transload Facility**	98,026
5.2%	**Total**	$ 60,857,883

CAPITAL		2026
Spokane International Airport	$ 86,507,889	-29.1%
Airport Business Park	-	-100.0%
Felts Field	1,649,519	-16.2%
Rail-Truck Transload Facility	32,104	N/A
Total	$ 88,189,511	-30.9%

Agenda Sheet for City Council:

Committee: Public Safety **Date:** 11/05/2026

Committee Agenda type: Discussion

Council Meeting Date: 12/02/2026

Date Rec'd	10/28/2026		
Clerk's File #	ORD C36979		
Cross Ref #			
Project #			
Submitting Dept	FIRE	**Bid #**	
Contact Name/Phone	TOM WILLIAMS 509-625-7001	**Requisition #**	
Contact E-Mail	TMWILLIAMS@SPOKANECITY.ORG		
Agenda Item Type	Special Budget Ordinance		
Council Sponsor(s)	MCATHCART KTELIS		
Sponsoring at Administrators Request	NO		
Lease? NO	**Grant Related?** NO	**Public Works?** NO	
Agenda Item Name	SPECIAL BUDGET ORDINANCE – FIRE DEPT MOBILIZATIONS – 2026 WILDFIRE		

Agenda Wording

SFD is requesting a Special Budget Ordinance that would recognize the realized costs and revenues. The department is still working on wildfires in the region and expects to incur at least $450,000 in total costs by the end of the season.

Summary (Background)

During 2026, SFD personnel were deployed to assist and work individual mobilizations throughout the region, accumulating to date, a total cost on the department of approximately $450,000 in overtime and other associated expenses.

What impacts would the proposal have on historically excluded communities?

This proposal is not anticipated to have a direct or disproportionate impact on historically excluded communities. The ordinance provides budget authority for wildfire mobilization expenses and associated reimbursements, supporting the Fire Department's continued ability to provide emergency response services to all communities.

How will data be collected, analyzed, and reported concerning the effect of the program/policy by racial, ethnic, gender identity, national origin, income level, disability, sexual orientation, or other existing disparities?

This ordinance is a financial adjustment to account for wildfire mobilization expenses and associated reimbursements. It does not establish a new program, modify existing policies, or change service delivery. As such, demographic data collection and reporting specific to this ordinance are not directly applicable. Financial expenditures and reimbursements will continue to be tracked through established City accounting and reporting procedures.

How will data be collected regarding the effectiveness of this program, policy, or product to ensure it is the right solution?

The effectiveness of this ordinance will be evaluated through the tracking and reconciliation of wildfire mobilization expenses and reimbursements. Financial records will be maintained to ensure accurate accounting, appropriate reimbursement, and compliance with City financial procedures.

Describe how this proposal aligns with current City Policies, including the Comprehensive Plan, Sustainability Action Plan, Capital Improvement Program, Neighborhood Master Plans, Council Resolutions, and others?

This proposal supports the City's public safety and emergency preparedness priorities by providing appropriate budget authority for wildfire mobilization expenses and reimbursements. It aligns with the City's commitment to fiscal accountability, responsible resource management, and maintaining effective emergency response capabilities.

Council Subcommittee Review

N/A

Fiscal Impact

Approved in Current Year Budget?	YES
Total Cost	$ $450,000
Current Year Cost	$ $450,000
Subsequent Year(s) Cost	$ 0.00

Narrative

This is a net-zero cost to the City because it's fully reimbursed. These costs are reimbursed by various state agencies, primarily the Department of Natural Resources and Washington State Patrol and has a net zero impact on the budget.

Amount		Budget Account
Expense	$ 450,000	# 1970-35126-22200-51216-99999
Revenue	$ 450,000	# 1970-35126-99999-34222-99999
Select	$	#
Select	$	#
Select	$	#
Select	$	#

Funding Source	One-Time
Funding Source Type	Program Revenue

Is this funding source sustainable for future years, months, etc?

Expense Occurrence	One-Time

Other budget impacts (revenue generating, match requirements, etc.)

Approvals		Additional Approvals	
Dept Head	JDEESE	PS EXEC REVIEW	JDEESE
Division Director	JDEESE	MANAGEMENT &	MILLER, JACOB
Accounting Manager	JDEESE		
Legal	JDEESE		
For the Mayor	JDEESE		

Distribution List	
	tmwilliams@spoknecity.org
ddneiwert@spokanecity.org	fireaccounting@spokanecity.org
escott@spokanecity.org	kahaack@spokanecity.org

SBO Request
Public Safety & Community Health Committee

Committee Date	11/5/2026
Submitting Department	Fire
Fund to Receive Budget (if different from submitting dept)	1970
Contact Name	Chief Tom Williams
Select Agenda Item Type	☒ Discussion Time Requested: 5min
Agenda Item Name	Special Budget Ordinance – Fire Dept MOBES – 2026 Wildfire Season
Grant Item	☐ Yes ☒ No If yes, this SBO should be submitted to the same agenda as the acceptance.
Why is this budget adjustment urgent and can't wait until the 2027-2028 biennium budget?	During 2026, SFD personnel were deployed to assist and work individual mobilizations throughout the region, accumulating to date, a total cost on the department of approximately $450,000 in overtime and other associated expenses. These costs are reimbursed by various state agencies, primarily the Department of Natural Resources. SFD is requesting a Special Budget Ordinance that would recognize the realized costs and revenues. The department is still working on wildfires in the region and expects to incur at least $450,000 in total costs by the end of the season.
What are the budget codes? (Accountant-provided)	Revenue $450,000 1970-35126-99999-34222-99999 Expense $450,000 1970-35126-22200-51216-99999

Fiscal Impact
Revenue: $450,000
Appropriation: $450,000

Funding Source ☒ One-time ☐ Recurring
Specify funding source: Select Funding Source*
Is this funding source sustainable for future years, months, etc? One time funding for actual support

Expense Occurrence ☒ One-time ☐ Recurring ☐ N/A

Other budget impacts: (FTE related?) No

What impact(s) would the proposal have on historically excluded communities? (must provide answer – if N/A, explain why)
This proposal is not anticipated to have a direct or disproportionate impact on historically excluded communities. The ordinance provides budget authority for wildfire mobilization expenses and associated reimbursements, supporting the Fire Department's continued ability to provide emergency response services to all communities.

How will data be collected, analyzed, and reported concerning the effect of the program/policy by racial, ethnic, gender identity, national origin, income level, disability, sexual orientation, or other existing disparities? (must provide answer – if N/A, explain why)
This ordinance is a financial adjustment to account for wildfire mobilization expenses and associated reimbursements. It does not establish a new program, modify existing policies, or change service delivery. As

such, demographic data collection and reporting specific to this ordinance are not directly applicable. Financial expenditures and reimbursements will continue to be tracked through established City accounting and reporting procedures.
How will data be collected regarding the effectiveness of this program, policy, or product to ensure it is the right solution? (must provide answer – if N/A, explain why) The effectiveness of this ordinance will be evaluated through the tracking and reconciliation of wildfire mobilization expenses and reimbursements. Financial records will be maintained to ensure accurate accounting, appropriate reimbursement, and compliance with City financial procedures.
Describe how this proposal aligns with current City policies, including the Comprehensive Plan, Sustainability Action Plan, Capital Improvement Program, Neighborhood Master Plans, Council Resolutions, and others? (must provide answer – if N/A, explain why) This proposal supports the City's public safety and emergency preparedness priorities by providing appropriate budget authority for wildfire mobilization expenses and reimbursements. It aligns with the City's commitment to fiscal accountability, responsible resource management, and maintaining effective emergency response capabilities.

Return to budget@spokanecity.org and allow up to one week for drafting.

ORDINANCE NO C36979

AMENDING ORDINANCE NO. C36794, ENTITLED IN PART, “AN ORDINANCE ADOPTING A MID-BIENNIAL MODIFICATION BUDGET FOR THE CITY OF SPOKANE”, AND AMENDING IT TO REALIZE WILDFIRE MOBILIZATION REIMBURSEMENTS, AND DECLARING AN EMERGENCY.

WHEREAS, subsequent to the adoption of the mid-biennium modification Ordinance No. C36794, as above entitled in part, and which passed the City Council November 24, 2025, it is necessary to make changes in the appropriations of the Fire/EMS Fund, which changes could not have been anticipated or known at the time of making such budget ordinance; and

WHEREAS, this ordinance has been on file in the City Clerk’s Office for five days;

NOW, THEREFORE, the City Council of Spokane does ordain:

Section 1. That in the budget of the Fire/EMS Fund, and the budget annexed thereto with reference to the Fund, the following changes be made:

1) Increase revenue by $450,000.
A) Of the increased revenue, $450,000 is provided solely for wildfire mobilization reimbursement from the Washington State Department of Natural Resources and other agencies.

2) Increase appropriation by $450,000.
A) Of the increased appropriation, $450,000 is provided solely for overtime of firefighters deployed to wildfire events.

Section 2. It is, therefore, by the City Council declared that an urgency and emergency exists for making the changes set forth herein, such urgency and emergency arising from the need to realize wildfire mobilization reimbursements, and because of such need, an urgency and emergency exists for the passage of this ordinance, and also, because the same makes an appropriation, it shall take effect and be in force immediately upon its passage.

Passed by the City Council on _____

_____
Council President

Attest:

Approved as to form:

_____
City Clerk

_____
City Attorney

_____
Mayor

_____
Date

_____
Effective Date

Agenda Sheet for City Council: **Committee:** Public Safety **Date:** 11/05/2026 **Committee Agenda type:** Discussion **Council Meeting Date:** 12/02/2026		**Date Rec'd**	10/28/2026
		Clerk's File #	ORD C36980
		Cross Ref #	OPR 2023-0897
		Project #	
Submitting Dept	POLICE	**Bid #**	GSA
Contact Name/Phone	SHAWNA 370-8534	**Requisition #**	
Contact E-Mail	SERNST@SPOKANEPOLICE.ORG		
Agenda Item Type	Special Budget Ordinance		
Council Sponsor(s)	KTELIS MCATHCART		
Sponsoring at Administrators Request	NO		
Lease? NO	**Grant Related?** NO	**Public Works?** NO	
Agenda Item Name	SPECIAL BUDGET ORDINANCE – FY26 CELLEBRITE SOFTWARE RENEWAL		

Agenda Wording

Amending Ordinance No. C36794, entitled in part, "An Ordinance Adopting a Mid-Biennial Modification Budget for the City of Spokane", and amending it to increase the appropriation for the Spokane Police Department's digital forensics software (Cellebrite) due to an unanticipated increase in contract renewal cost and additional annual payment being requested earlier than anticipated, and declaring an emergency.

Summary (Background)

SPD amendment to digital forensics tool for required software upgrades, Cellebrite, to access evidence from iOS and Android devices. In March 2026, an SBO was presented for the annual renewal of this software for 2025. Additional funding is needed for OPR 2023-0897 for 2026 services and this contract amendment. Funding is from the Forfeitures & Contributions fund where cash has already been received. In 2027 forward, this contract is budgeted in Police capital.

What impacts would the proposal have on historically excluded communities?

SPD's draft lab manual is written to prevent harms to historically excluded communities: • Suspects: A suspect's phone is examined only with a warrant or court order. A suspect's consent is never accepted. • Victims and witnesses: Consent is accepted only from victims and witnesses for their own devices, with scope and retention explained in writing. • Eligibility thresholds: Cases must meet examination thresholds. In 2026, 92% of cases with linked offense data were felonies. • Prohibited uses: Lab tools and data may never be used for immigration enforcement or to monitor activity protected by the First Amendment. • Limits on review and

How will data be collected, analyzed, and reported concerning the effect of the program/policy by racial, ethnic, gender identity, national origin, income level, disability, sexual orientation, or other existing disparities?

Every lab request is logged in XBit by case number, which links it to the incident report in Axon Records. Under federal NIBRS reporting standards, those reports already record the race, ethnicity, sex, and age of victims, suspects, and arrestees, along with the incident's location. SPD can therefore analyze lab casework by these characteristics without collecting any new personal information. Beginning with the first annual public summary in January 2027, SPD will report: • Who is affected: examinations by race, ethnicity, sex, and age of the device owner's role in the case (victim, witness, or suspect), compared with the same characteristics

How will data be collected regarding the effectiveness of this program, policy, or product to ensure it is the right solution?

The lab already logs every request, examination, and outcome in XBit. Each case is linked by case number to Axon Records, so the lab's work can be measured against what happens in the case. SPD will track the following measures and include them in the annual public summary beginning in January 2027: • Whether the tool works. The share of devices the lab can lawfully access and extract, by device type. The required upgrade exists because newer phones cannot be processed on older software. This measure will show whether the upgrade restores that ability. • Timeliness. Time from request to completed report, and the size of the

Describe how this proposal aligns with current City Policies, including the Comprehensive Plan, Sustainability Action Plan, Capital Improvement Program, Neighborhood Master Plans, Council Resolutions, and others?

The upgrade is necessary for investigations involving technology such as cell phones and tablets.

Council Subcommittee Review

Fiscal Impact

Approved in Current Year Budget?	NO
Total Cost	$ 203,638.00
Current Year Cost	$ 203,638.00
Subsequent Year(s) Cost	$

Narrative

Fund balance is approximately $1.5M

Amount		Budget Account
Expense	$ 45,856.00	# 1560-17200-21250-54820-68074
Expense	$ 157,782 .00	# 1560-17200-21250-54820-68074
Select	$	#
Select	$	#
Select	$	#
Select	$	#

Funding Source	One-Time
Funding Source Type	Reserves

Is this funding source sustainable for future years, months, etc?

Expense Occurrence	One-Time

Other budget impacts (revenue generating, match requirements, etc.)

Approvals		Additional Approvals	
Dept Head	JDEESE	PS EXEC REVIEW	JDEESE
Division Director	JDEESE	MANAGEMENT &	MILLER, JACOB
Accounting Manager	JDEESE	PURCHASING	NECHANICKY, JASON
Legal	JDEESE		
For the Mayor	JDEESE		

Distribution List

	spdfinance@spokanepolice.org
spdexecutivestaff@spokanepolice.org	

ORDINANCE NO C36980

AMENDING ORDINANCE NO. C36794, ENTITLED IN PART, “AN ORDINANCE ADOPTING A MID-BIENNIAL MODIFICATION BUDGET FOR THE CITY OF SPOKANE”, AND AMENDING IT TO INCREASE THE APPROPRIATION FOR THE SPOKANE POLICE DEPARTMENT’S DIGITAL FORENSICS SOFTWARE (CELLEBRITE) DUE TO AN UNANTICIPATED INCREASE IN CONTRACT RENEWAL COST AND ADDITIONAL ANNUAL PAYMENT BEING REQUESTED EARLIER THAN ANTICIPATED, AND DECLARING AN EMERGENCY.

WHEREAS, subsequent to the adoption of the mid-biennium modification Ordinance No. C36794, as above entitled in part, and which passed the City Council November 24, 2025, it is necessary to make changes in the appropriations of the Forfeitures and Contributions Fund, which changes could not have been anticipated or known at the time of making such budget ordinance; and

WHEREAS, this ordinance has been on file in the City Clerk’s Office for five days;

NOW, THEREFORE, the City Council of Spokane does ordain:

Section 1. That in the budget of the Forfeitures and Contributions Fund, and the budget annexed thereto with reference to the Fund, the following changes be made:

1) Increase appropriation by $203,638.
A) Of the increased appropriation, $203,638 is provided solely for software maintenance.

Section 2. It is, therefore, by the City Council declared that an urgency and emergency exists for making the changes set forth herein, such urgency and emergency arising from the need to increase the appropriation for the Spokane Police Department’s digital forensics software (Cellebrite) due to an unanticipated increase in contract renewal cost and additional annual payment being requested earlier than anticipated, and because of such need, an urgency and emergency exists for the passage of this ordinance, and also, because the same makes an appropriation, it shall take effect and be in force immediately upon its passage.

Passed by the City Council on _____

_____
Council President

Attest:

Approved as to form:

_____
City Clerk

_____
City Attorney

_____
Mayor

_____
Date

_____
Effective Date

Attachment Two

Spokane Police Department
Forfeited Funds Expenditure Request

Requestor/Date Shawna Ernst - 10/28/2026

Unit Technical Assistance Response Unit

Justification: Purchase of Cellebrite digital forensics software for use in major crimes and drug investigations. Suitable purchase for State Drug Seizures (activities that relate to law enforcement activites having a 'close connection' to enforcing controlled substances).

Qualifications:

[X] Washington State Seizure: Drug Per RCW 69.50.505

(10) for the expansion and improvement of controlled substances related law enforcement activity. Money retained under this section may not be used to supplant preexisting funding sources.

AGO 1995 No.11

Section 69.50.505(10) allows the use of drug proceeds for activities that relate to controlled substances but incidentally further other law enforcement purposes.

AGO 2010 No. 1

RCW 69.50.505 (10) authorizes use of drug forfeiture proceeds for law enforcement activities having a 'close connection' to enforcing controlled substances laws.

[ ] Washington State Seizure: Felony

Per RCW 10.105.010… proceeds shall be used exclusively for the expansion and improvement of law enforcement activity.

[ ] Federal Seizures

Per the DOJ Equitable Sharing Guide and Interim Policy. Select all that apply:

__ Law Enforcement Operations and Investigations
__ Law Enforcement Training
__ Law Enforcement equipment
__ Law Enforcement Memorials or Awards
__ Drug and Drug Education or other Awareness Programs
__ Support of Community Based Programs
__ Law Enforcement Travel and Per Diem

Approvals:

Unit Sergeant NA _____ Unit Lieutenant NA

Division Captain _____ Department Chief _____

Permissible Use of Forfeited Funds under { } State: Drug { } State: Felony {X} Federal

Accounting:

Federal-Justice 1560-17100-21250-***-68084**
Federal-Treasury 1560-17100-21250-***-68083**
State Drug 1560-17200-21250-***-68074**
State Non Drug 1560-17200-21250-***-68075**

CITY COUNCIL STUDY SESSION · NOVEMBER 5, 2026

Digital Forensics at SPD: Protecting Evidence and the Public

How the TARU Digital Forensic Laboratory decides what to examine, what it will not do, and how it is held accountable

Spokane Police Department · TARU Digital Forensic Laboratory

WHY WE'RE HERE

Council asked how SPD uses Cellebrite. Our answer is a lab manual written to be stricter than the national standard.

01

Authority first

No device is examined without a warrant, a court order, or a victim's or witness's consent for their own device.

02

Only what is needed

Investigators must show the data is necessary, and examiners stay inside the scope they are given.

03

Accountable in the open

Every access is logged and audited, and the lab will publish an annual public summary.

WHAT THE LAB DOES

A small lab with a narrow job

The lab recovers and examines data from phones, computers and other digital devices for criminal investigations. Every request, examination and access is recorded.

Tool or system	What it does in the lab
Cellebrite	Extracts and analyzes data from mobile devices, under documented authority
Magnet Graykey Preserve	Holds a seized device in its current state while a warrant is sought
XBit	Lab management system: requests, logging and the audit trail
BEAST	Chain of custody for physical evidence
Evidence.com	Secure storage for digital evidence

THE LAB'S WORK IN 2026

Most of the work is phones in felony cases

300
devices and data returns processed

152
cases supported

92%
of cases with offense data are felonies

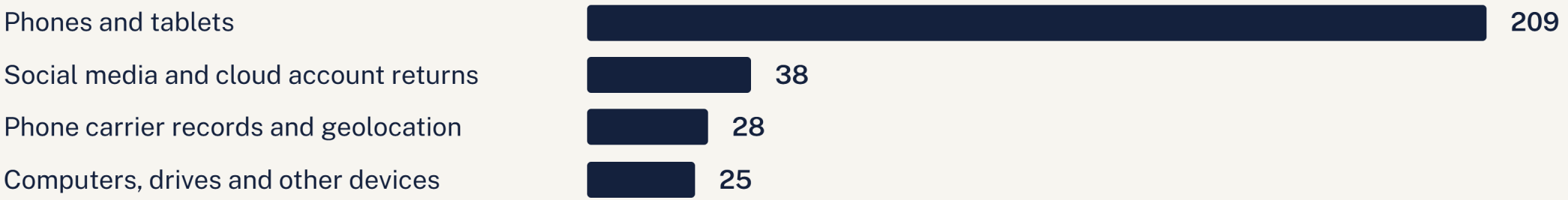

Source: XBit, 2026. Excludes 87 video collection and analysis requests.

The cases the lab supports

Type of case	Cases
Sex crimes, including child exploitation	41
Shootings, assaults and weapons	20
Homicide and death investigations	11
Robbery and carjacking	10
Domestic violence, stalking and harassment	8
Arson	6
Child abuse and neglect	3
Other: drugs, fraud, burglary, theft, serious traffic	17

35
cases involve crimes against children

60
are violent crimes

30
involved a firearm

116 cases with linked offense data, each counted once. Source: XBit and Axon Records, 2026.

HOW WORK IS AUTHORIZED

Nothing is examined without legal authority

Warrant or court order

Required for any device that belongs to a suspect, regardless of any consent offered.

Consent

Accepted only from a victim or witness, for their own device, with scope and retention explained in writing.

Eligibility thresholds

The case must meet the manual's examination thresholds, or have documented approval for an exception.

Authority is documented in XBit before any device is connected. **No instruction, deadline or urgency changes this.**

HOW WORK IS AUTHORIZED

Before we ask: is the data necessary?

Section 9.0 of the manual is modeled on the UK's 2022 statutory code for extracting data from victims' and witnesses' devices. It asks three questions before any request.

1 **Is it needed?**

The data must be relevant to a reasonable line of inquiry, not gathered in case it turns out to be useful.

2 **Is there a less intrusive way?**

A screenshot, a single photo, or records from a provider may answer the question without an extraction.

3 **Can it be limited?**

When an extraction is needed, it is targeted to the data the case requires wherever the tools allow.

PRESERVATION BEFORE A WARRANT

Holding a phone is not searching it

Magnet Graykey Preserve keeps a seized device in its current state while investigators seek a warrant.

It creates no image, copy or export. No data is read.

Used only when an investigator confirms in writing that a warrant is being sought, and the case meets the lab's examination thresholds.

Time-limited, with every use logged and reviewed quarterly.

"National guidance would let us copy a phone before the warrant arrives. We chose not to."

SWGDE's 2025 position on timely preservation allows a full acquisition held unreviewed while a warrant is sought. SPD holds the device only.

HOW WORK IS LIMITED

Staying inside the warrant

Review only what is authorized

Examiners review and report only within the scope of the warrant or consent. Everything else stays sealed.

Stop at the edge

Evidence of a crime the warrant does not cover? Stop, document it, and get a new warrant. Stricter than plain view requires.

No reuse across cases

Data from one case is never used in another case or added to any cross-case index.

Never for these purposes

Immigration enforcement, monitoring activity protected by the First Amendment, or anything beyond the investigation authorized.

HOW DATA IS PROTECTED

Full extractions stay sealed

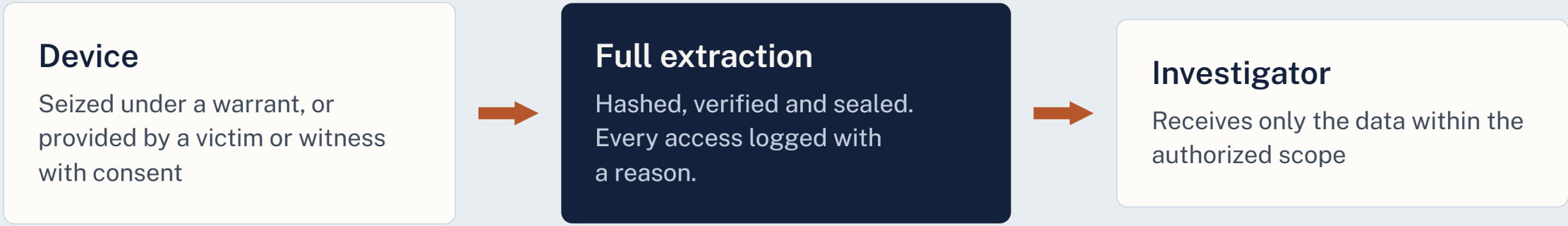

Hash verified before storage and before any release

Child sexual abuse material handled only in an isolated environment

Release of a full extraction is restricted

Defense access is ordered, scoped and controlled the same way for both sides

HOW VICTIMS ARE PROTECTED

Victims decide what happens to their data

A survivor who is not ready to go forward today should not lose the evidence tomorrow.

The 20-year outer limit mirrors RCW 5.70.030, which already applies to unreported sexual assault kits.

Told in writing at consent how long their data is kept and how to ask about it.

Kept sealed, not destroyed, if no charge is filed: for the longer of the retention schedule or the limitation period (RCW 9A.04.080), up to 20 years.

Reopened only with fresh consent or a warrant, with a victim advocate offered.

Destroyed on request when no charge is filed or expected and the prosecutor identifies no legal bar.

Never contacted unprompted about a dormant extraction. The choice to return is theirs.

OVERSIGHT

How the lab is held accountable

Code of Ethics

Modeled on the 2016 National Commission on Forensic Science code. Binding on every examiner.

Deviations

Requested in advance on an XBit form and reviewed by lab management. Never after the fact.

Complaints

Handled through SPD's Internal Affairs process.

Errors

Reported, corrected and disclosed to anyone affected. A hidden error is misconduct.

Audit trail

Every access to an extraction is logged with its reason and reviewed.

Quality system

Built to ISO/IEC 17025 and ANAB AR 3125 requirements for accreditation.

TRANSPARENCY

What we will report to the public each year

An annual summary, published as counts only.

No names, case numbers or other identifiers.

- Preserve uses and their outcomes
- Dormant victim and witness extractions held
- Extractions destroyed, including at a victim’s request
- Complaints received
- Deviations from procedure

BENCHMARKS

How we compare to the national standard

Practice	SWGDE guidance	SPD lab manual
Before a warrant	A full copy may be made and held unreviewed	Device held; nothing copied
Hash verification	Required	Required, before storage and any release
Prohibited uses	Not addressed	No immigration enforcement or First Amendment monitoring
Release of full extractions	Not addressed	Sealed; investigators get filtered data

Where SWGDE sets the technical standard, we follow it. **Where it is silent on privacy and civil liberties, the manual sets its own, stricter rules.**

Source: SWGDE Position on Timely Preservation via Digital Acquisition, 25-F-001-1.0 (2025)

WHAT COMES NEXT

Next steps

Step	Target
Legal Advisor review of lab manual v3.6	November 2026
Adopt lab manual v3.6	November 2026
Submit Cellebrite license renewal	November 2026
Publish first annual public summary	January 2027
Pursue ANAB accreditation	2027-2028

OUR COMMITMENT

Use these tools only with legal authority, only as far as the case requires, and in the open.

Questions

Shawna Ernst · Director, TARU · Spokane Police Department

Agenda Sheet for City Council:

Committee: Public Safety **Date:** 11/05/2026

Committee Agenda type: Discussion

Council Meeting Date: 12/02/2026

Date Rec'd	10/28/2026		
Clerk's File #	RES 2026-0090		
Cross Ref #			
Project #			
Submitting Dept	MAYOR	**Bid #**	
Contact Name/Phone	SARAH NUSS 6779	**Requisition #**	
Contact E-Mail	AMCDANIEL@SPOKANECITY.ORG		
Agenda Item Type	Resolutions		
Council Sponsor(s)	KTELIS BWILKERSON		
Sponsoring at Administrators Request	YES		
Lease? NO	**Grant Related?** NO	**Public Works?** NO	
Agenda Item Name	CITY OF SPOKANE COMMUNITY WILDFIRE PROTECTION PLAN RESOLUTION		

Agenda Wording

A resolution approving the City of Spokane Community Wildfire Protection Plan.

Summary (Background)

The City of Spokane Community Wildfire Protection Plan provides a framework for reducing wildfire risk through preparedness, mitigation, response coordination, and community engagement. This resolution approves this plan to guide future planning efforts, support grant funding opportunities, and be updated periodically to reflect changing conditions, emerging best practices, and the implementation of efforts by the City of Spokane to reduce wildfire risk and strengthen its ability to prepare for, respond to, and recover from future wildfire events.

What impacts would the proposal have on historically excluded communities?

See information included within the Community Wildfire Protection Plan.

How will data be collected, analyzed, and reported concerning the effect of the program/policy by racial, ethnic, gender identity, national origin, income level, disability, sexual orientation, or other existing disparities?

See information included within the Community Wildfire Protection Plan.

How will data be collected regarding the effectiveness of this program, policy, or product to ensure it is the right solution?

See information included within the Community Wildfire Protection Plan.

Describe how this proposal aligns with current City Policies, including the Comprehensive Plan, Sustainability Action Plan, Capital Improvement Program, Neighborhood Master Plans, Council Resolutions, and others?

Council Subcommittee Review

Fiscal Impact	
Approved in Current Year Budget?	N/A
Total Cost	**$**
Current Year Cost	**$**
Subsequent Year(s) Cost	**$**

Narrative

Amount		**Budget Account**
Select	**$**	**#**
Select	**$**	**#**
Select	**$**	**#**
Select	**$**	**#**
Select	**$**	**#**
Select	**$**	**#**

Funding Source	N/A
Funding Source Type	Select

Is this funding source sustainable for future years, months, etc?

Expense Occurrence	N/A

Other budget impacts (revenue generating, match requirements, etc.)

Approvals		**Additional Approvals**	
Dept Head	MCDANIEL, ADAM		
Division Director			
Accounting Manager	DANIELS, DERREK		
Legal	DUGGAN, ANDI		
For the Mayor	PICCOLO, MIKE		

Distribution List	
ldahl@spokanecity.org	

RESOLUTION 2026 – 0090

A resolution approving the City of Spokane Community Wildfire Protection Plan.

WHEREAS, the City of Spokane Community Wildfire Protection Plan provides a framework for reducing wildfire risk through preparedness, mitigation, response coordination, and community engagement; and

WHEREAS, the City of Spokane Community Wildfire Protection Plan was developed in collaboration with City departments and regional partners and identifies areas of wildfire risk, evaluates existing capabilities, and establishes strategies to improve community resilience over the coming years; and

WHEREAS, the City of Spokane Community Wildfire Protection Plan prioritizes actions that strengthen public safety, protect critical infrastructure, improve evacuation readiness, support wildfire response, and reduce hazardous fuels where appropriate and reinforces the importance of public education, regional coordination, and continued investment in wildfire resilience initiatives; and

WHEREAS, the City of Spokane Community Wildfire Protection Plan, as adopted by the City Council, will guide future planning efforts, support grant funding opportunities, and be updated periodically to reflect changing conditions, emerging best practices, and implementation of efforts by the City of Spokane to reduce wildfire risk and strengthen its ability to prepare for, respond to, and recover from future wildfire events.

WHEREAS, **NOW, THEREFORE, BE IT RESOLVED** by the City Council for the City of Spokane that it hereby approves the City of Spokane Community Wildfire Protection Plan, as included in the appendix to this resolution.

PASSED BY THE CITY COUNCIL ON _____, 2026.

_____
City Clerk

Approved as to form:

_____
Assistant City Attorney

Agenda Sheet for City Council:

Committee: Finance & Administration **Date:** 10/27/2026

Committee Agenda type: Discussion

Council Meeting Date: 11/18/2026

Date Rec'd	10/21/2026
Clerk's File #	RES 2026-0085
Cross Ref #	
Project #	
Bid #	
Requisition #	

Submitting Dept	CITY COUNCIL		
Contact Name/Phone	PAUL DILLON 625-6254		
Contact E-Mail	PDILLON@SPOKANECITY.ORG		
Agenda Item Type	Resolutions		
Council Sponsor(s)	PDILLON SDIXIT KKLITZKE		
Sponsoring at Administrators Request	NO		
Lease? NO	**Grant Related?** NO	**Public Works?** NO	
Agenda Item Name	DESIGNATION OF GREATER SPOKANE LOW INCOME HOUSING CONSORTIUM		

Agenda Wording

A RESOLUTION designating Greater Spokane Low Income Housing Development Consortium, doing business as Spokane Regional Land Bank, to establish and operate as a land bank as provided in Chapter 35.108 RCW.

Summary (Background)

Washington State Bill 1974 (2026), later codified into Chapter 35.108 RCW authorizes local governments to adopt local legislation to establish a land bank to use new State-created tools and funds to address the problems caused by vacant, abandoned, and tax-delinquent properties. Once so designated, the land bank can hold property, tax-exempt, while preparing it for affordable housing and public benefit uses included with or attached to affordable housing. The state law permits the establishment of a land bank by a public corporation, a public housing authority established under chapter 35.82 RCW, or an entity with tax-exempt 501(c)(3)status. The legislation permits the land bank to be designated by resolution or established by ordinance and to use new state-created tools and funds to address the problems caused by vacant, abandoned, and tax-delinquent properties. This resolution designates the Greater Spokane Low Income Housing Development Consortium, doing business as Spokane Regional Land Bank to operate as a land bank under the terms of RCW 35.108. Greater Spokane Low Income Housing Consortium is a nonprofit Washington corporation and has been designated as a tax-exempt entity under Section 501 (c) (3) of the Internal Revenue Code; and therefore, qualifies for designation to establish and operate a land bank under RCW 35.108. Further, it has consented to the designation and the terms governing that designation, including providing an annual report to the Mayor and City Council commencing March 1, 2027. The resolution states the designation will remain in effect for five years, until January 1, 2032, during which time the Council will evaluate the merits of the land bank program and either renew the designation here, evaluate other entities for designation, and/or establish a public corporation to operate a land bank.

What impacts would the proposal have on historically excluded communities?

The goal of the land bank designation is to increase low-income housing stock by making vacant or underutilized property more affordable for low-income housing developers. It is presumed such goals benefit all Spokane citizens, but in particular historically marginalized communities.

How will data be collected, analyzed, and reported concerning the effect of the program/policy by racial, ethnic, gender identity, national origin, income level, disability, sexual orientation, or other existing disparities?

The resolution requires the designee to report annually to the Mayor and Spokane City Council. The contents of the annual report will include, at a minimum. the information required by RCW 35.108.050: (a) Real property parcels acquired, held, and transferred during the year; (b) The manner of disposition and alignment with local housing and land use plans; (c) How each action advanced a community benefit; (d) The purchase price and assessed value of each parcel acquired; (e) The sales price and assessed value of each parcel transferred; (f) The number of housing units developed on each parcel transferred; (g) The affordability

How will data be collected regarding the effectiveness of this program, policy, or product to ensure it is the right solution?

See answer above

Describe how this proposal aligns with current City Policies, including the Comprehensive Plan, Sustainability Action Plan, Capital Improvement Program, Neighborhood Master Plans, Council Resolutions, and others?

This program is consistent with the multiple programs advanced by the City of Spokane to increase the stock of low income housing.

Council Subcommittee Review

None

Fiscal Impact	
Approved in Current Year Budget?	N/A
Total Cost	**$**
Current Year Cost	**$**
Subsequent Year(s) Cost	**$**

Narrative

Amount		**Budget Account**
Select	**$**	**#**
Select	**$**	**#**
Select	**$**	**#**
Select	**$**	**#**
Select	**$**	**#**
Select	**$**	**#**

Funding Source	N/A
Funding Source Type	Select

Is this funding source sustainable for future years, months, etc?

Expense Occurrence	N/A

Other budget impacts (revenue generating, match requirements, etc.)

Approvals		**Additional Approvals**	
Dept Head			
Division Director			
Accounting Manager	DANIELS, DERREK		
Legal	DUGGAN, ANDI		
For the Mayor			

Distribution List	
pdillon@spokanecity.org	benstuckart@gmail.com
amcdaniel@spokanecity.org	sdixit@spokanecity.org
Kklitzke@spokanecity.org	

RESOLUTION 2026-0085

A RESOLUTION designating Greater Spokane Low Income Housing Development Consortium, doing business as Spokane Regional Land Bank, to establish and operate as a land bank as provided in Chapter 35.108 RCW.

WHEREAS, on March 27, 2026, House Bill 1974, which was sponsored by State Representative Natasha Hill and which authorized coordinated land banking, was signed into law by Governor Bob Ferguson and later codified into Chapter 35.108 of the Revised Code of Washington; and

WHEREAS, House Bill1974 authorizes local governments to adopt local legislation to establish a land bank to use new State-created tools and funds to address the problems caused by vacant, abandoned, and tax-delinquent properties; and

WHEREAS, land bank hold property, tax-exempt, while preparing it for affordable housing and public benefit uses included with or attached to affordable housing; and

WHEREAS, a city or county may authorize the establishment of a land bank by a public corporation established under RCW 35.21.730, a public housing authority established under chapter 35.82 RCW, or an entity exempt from federal income taxation under 26 U.S.C. Sec. 501(c)(3) of the internal revenue code of 1986, as amended; and

WHEREAS, the city or county legislative authority must adopt an ordinance or resolution authorizing such entity to establish and operate a land bank; and

WHEREAS, the Spokane Regional Land Bank was established in May 2022 by the Greater Spokane Low Income Housing Consortium with a mission is to provide access to low-cost land for affordable housing development; and

WHEREAS, the Greater Spokane Low Income Housing Consortium is a nonprofit Washington corporation and has been designated as a tax-exempt entity under Section 501 (c) (3) of the Internal Revenue Code; and therefore, qualifies for designation to establish and operate a land bank under RCW 35.108; and

WHEREAS, the City Council finds that designating the Greater Spokane Regional Land Bank as a land bank is the most expeditious path toward implementing a land bank under House Bill 1974; and

WHEREAS, the City Council finds that the governing body of the Greater Spokane Regional Land Bank, in a written resolution dated _____, 2026, has consented to designation as a land bank and agreed to abide by the terms of such designation; and

WHEREAS, the City Council intends for this designation to be in effect for approximately five years, until January 1, 2032, during which time the Council will evaluate the merits of the land bank program and either renew the designation here, evaluate other entities for designation, and/or establish a public corporation to operate a land bank;

NOW, THEREFORE, **BE IT RESOLVED**, that pursuant to RCW 35.108.030, the Spokane City Council designates Greater Spokane Low Income Housing Development Consortium, doing business as Spokane Regional Land Bank, (UBI 601 258 322) to establish and operate a land bank as provided under Chapter 35.108 RCW; and

BE IT FURTHER RESOLVED that the public purpose of this designation is to permit the Greater Spokane Low Income Housing Development Consortium, dba Spokane Regional Land Bank, to acquire, hold, manage and transfer property for affordable housing consistent with adopted local housing plans and Chapter 36.70A RCW;

BE IT FURTHER RESOLVED that the Greater Spokane Low Income Housing Development Consortium, dba Spokane Regional Land Bank, shall govern its affairs consistent with Washington and federal law relating to nonprofit corporations, and public oversight shall be satisfied through the annual reporting required by this resolution and Section 35.108.050; and

BE IT FURTHER RESOLVED that Greater Spokane Low Income Housing Development Consortium, dba Spokane Regional Land Bank, shall be deemed to have all of the responsibilities and authority of a land bank under Chapter 35.108 RCW, including, but not limited to:

1) Establishing and maintaining an inventory of real property acquired, held, leased, or transferred by a land bank authority consistent with Chapter 35.108 RCW;
2) Acquiring, holding, managing, improving, leasing, transferring and/or disposing to be used as affordable housing, consistent with Chapter 35.108 RCW, including transfers at less than fair market value in exchange for affordability requirements stated therein; and
3) Commencing March 1, 2027, and thereafter on March 1 of each year, preparing and publishing an annual report fulfilling the requirements of RCW 35.108.050 and in addition, formally presenting such report to the Mayor of Spokane and the Spokane City Council; and

BE IT FURTHER RESOLVED that the designation under this resolution shall expire on January 1, 2032 unless renewed by resolution of this council or supplanted by ordinance of equal effect.

Adopted by the City Council this ____ day of November, 2026.

_____
City Clerk

Approved as to form:

_____
Assistant City Attorney

Agenda Sheet for City Council:

Committee: Public Safety **Date:** 11/05/2026

Committee Agenda type: Discussion

Council Meeting Date: 12/02/2026

Date Rec'd	10/28/2026
Clerk's File #	ORD C36974
Cross Ref #	
Project #	
Bid #	
Requisition #	

Submitting Dept	MAYOR
Contact Name/Phone	ADAM 6779
Contact E-Mail	AMCDANIEL@SPOKANECITY.ORG
Agenda Item Type	First Reading Ordinance
Council Sponsor(s)	PDILLON BWILKERSON
Sponsoring at Administrators Request	YES
Lease? NO	**Grant Related?** NO
Public Works? NO	
Agenda Item Name	AN ORDINANCE MODERNIZING AND STREAMLINING THE CITY'S CIVIL

Agenda Wording

An ordinance modernizing and streamlining the City's Civil Infraction System; adopting a new Section 01.05.005; amending Sections of Chapter 01.05 and repealing Sections of Chapter 01.05, all of the Spokane Municipal Code.

Summary (Background)

This ordinance modernizes and streamlines the City's civil infraction system by adopting the state procedures by reference and removing code that conflicts with court rules. This ordinance also intends to improve Code Enforcement and Municipal Court administration and disposition of civil infractions by improving the certificate of correction process.

What impacts would the proposal have on historically excluded communities?

N/A - The purpose of this ordinance is to update the City's civil infraction system to ensure alignment with state law and court procedures.

How will data be collected, analyzed, and reported concerning the effect of the program/policy by racial, ethnic, gender identity, national origin, income level, disability, sexual orientation, or other existing disparities?

Demographic data is not collected or analyzed as part of this policy update.

How will data be collected regarding the effectiveness of this program, policy, or product to ensure it is the right solution?

Data is not collected or analyzed as part of this policy update. General violation and infraction data may be collected and reported by Code Enforcement and other enforcement officers and/or by municipal court.

Describe how this proposal aligns with current City Policies, including the Comprehensive Plan, Sustainability Action Plan, Capital Improvement Program, Neighborhood Master Plans, Council Resolutions, and others?

This ordinance aligns with RCW 7.80, Washington State Court Rules: Infraction Rules for Courts of Limited Jurisdiction (IRLJ), and the Spokane Municipal Court Local Rules.

Council Subcommittee Review

Fiscal Impact	
Approved in Current Year Budget?	N/A
Total Cost	**$**
Current Year Cost	**$**
Subsequent Year(s) Cost	**$**

Narrative

Amount		**Budget Account**
Select	**$**	**#**
Select	**$**	**#**
Select	**$**	**#**
Select	**$**	**#**
Select	**$**	**#**
Select	**$**	**#**

Funding Source	N/A
Funding Source Type	Select

Is this funding source sustainable for future years, months, etc?

Expense Occurrence	N/A

Other budget impacts (revenue generating, match requirements, etc.)

Approvals		**Additional Approvals**	
Dept Head	MCDANIEL, ADAM		
Division Director			
Accounting Manager	DANIELS, DERREK		
Legal	DUGGAN, ANDI		
For the Mayor	PICCOLO, MIKE		

Distribution List	

ORDINANCE NO. C36974

An ordinance modernizing and streamlining the City's Civil Infraction System; adopting a new Section 01.05.005; amending Sections of Chapter 01.05 and repealing Sections of Chapter 01.05, all of the Spokane Municipal Code.

NOW, THEREFORE, the City of Spokane does ordain:

Section 1. That there is adopted a new Section 01.05.005 of the Spokane Municipal Code to read as follows:

Section 01.05.005 Chapter 7.80 RCW Adopted by Reference

Chapter 7.80 of the Revised Code of Washington ("RCW"), as now or hereafter amended, is hereby adopted by reference as part of this title in all respects as though such sections were set forth herein in full.

Section 2. That Section 01.05.020 of the Spokane Municipal Code is amended to read as follows:

Section 01.05.020 ((~~Administrative Responsibilities~~)) Enforcement Officer Defined

A. Except as provided in this section, this chapter does not alter the responsibilities vested by this code in the several officers and employees for administration and enforcement of its various provisions. Promulgation of any rules or regulations relating to enforcement of this code shall comply with Chapter 03.14 of this code.

B. ((~~For~~)) Consistent with RCW 7.80.040 and for purposes of issuing a notice of infraction of the City of Spokane, the ((~~code~~)) enforcement officer is:

1. the mayor or the City of Spokane division director, department director or assistant director ((~~, described in chapter 3.01A SMC~~)), vested with administrative and enforcement jurisdiction in the particular matter; or

2. an employee or agent to whom enforcement jurisdiction has been specifically conferred, who carries a special police commission conferring authority to issue a notice of infraction for the kind of violation in question; or

3. a regularly commissioned law enforcement officer; or

4. a ((~~city~~)) City of Spokane prosecutor

Section 3. That Section 01.05.040 of the Spokane Municipal Code is amended to read as follows:

Section 01.05.040 ((~~Notice of Violation or~~)) Notice of Infraction Process

((~~A.~~)) If, upon completion of ((~~the~~)) an investigation, the ((~~code~~)) enforcement officer finds a violation, and any attempt to achieve voluntary correction has not succeeded, the officer may issue a ((:)) Notice of Infraction in such form and upon such procedure as have been established under RCW 7.80, Washington State Court Rules: Infraction Rules for Courts of Limited Jurisdiction, or Spokane Municipal Court Local Rules.

((~~1. notice of violation, in such form and upon such procedure as have been established under the pertinent provisions of this code; or~~

~~2. notice of infraction, in such form and upon such procedure as provided in this chapter.~~))

Section 4. That Section 01.05.050 of the Spokane Municipal Code is hereby repealed.

Section 5. That Section 01.05.060 of the Spokane Municipal Code is amended to read as follows:

Section 01.05.060 Person Receiving Notice – Identification and Detention

A. A person who is to receive a notice of civil infraction under ((~~SMC 1.05.050~~)) this chapter is required to identify himself or herself to the enforcement officer by giving his or her name, address, and date of birth. Upon the request of the officer, the person shall produce reasonable identification, including a driver's license or identicard.

B. A person who is unable or unwilling to reasonably identify himself or herself to an enforcement officer may be detained for a period of time not longer than is reasonably necessary to identify the person for purposes of issuing a civil infraction.

Section 6. That Section 01.05.070 of the Spokane Municipal Code is hereby repealed.

Section 7. That Section 01.05.080 of the Spokane Municipal Code is hereby repealed.

Section 8. That Section 01.05.090 of the Spokane Municipal Code is hereby repealed.

Section 9. That Section 01.05.100 of the Spokane Municipal Code is hereby repealed.

Section 10. That Section 01.05.110 of the Spokane Municipal Code is hereby repealed.

Section 11. That Section 01.05.120 of the Spokane Municipal Code is hereby repealed.

Section 12. That Section 01.05.140 of the Spokane Municipal Code is amended to read as follows:

Section 01.05.140 Certificate of Correction Process

At the request of a person responsible or entity identified on the infraction, the ((~~code~~)) enforcement officer ((~~will~~)) may re-inspect to determine if correction of the violation has been accomplished. If ((~~so,~~)) the enforcement officer finds that the correction of the violation has been accomplished, the enforcement officer ((~~will~~)) may sign and provide to such person responsible a certificate of correction for filing with municipal court. If at least forty-eight hours prior to the hearing on the infraction, the person responsible or entity identified on the infraction ((~~presents~~)) files a certificate of correction to the municipal court, the latest infraction listed on the certificate ((~~will~~)) may be dismissed without prejudice by the municipal court.

Section 13. That Section 01.05.151 of the Spokane Municipal Code is amended to read as follows:

Section 01.05.151 Civil Infraction Penalty Schedule

A. It is the policy of the City of Spokane to educate and seek voluntary compliance for the code violations referenced in this chapter before issuing civil infractions or escalating penalties.

B. Unless designated otherwise by local or state law, violations of the following Spokane Municipal Code chapters and sections are civil infractions subject to the monetary penalties and restitution prescribed by state law. Each and every such violation shall be a separate and distinct offense. In case of a continuing violation, every day's continuance shall be a separate and distinct violation.

Reference	**Spokane Municipal Code Chapter**
SMC Title 1	**General Provisions**
SMC 01.07	Spokane Fair Elections Code

SMC Title 4	**Administrative Agencies and Procedures**
SMC 04.02	Special Administrative Procedures – Billing and Collection of Claims
SMC Title 8	**Taxation and Revenue**
SMC 08.01	Business Registrations
SMC 08.02	Fees and Charges
SMC 08.03	Admissions Tax
SMC 08.10	Utilities, Franchise Taxes
SMC Title 9	**Employment Standards**
SMC 09.02	Fair Chance Hiring
SMC Title 10	**Regulation of Activities**
SMC 10.23A	Amusement Facilities
SMC 10.25	Commercial Tree Work
SMC 10.26	Building Moving and Relocation
SMC 10.27A	Cable Communications Code
((~~SMC 10.28~~))	((~~Sidewalk Cafes~~))
SMC 10.29	Contractors and Workers
SMC 10.33A	Fireworks Code
SMC 10.34A	For-Hire Transportation
SMC 10.36	Gas Transmission and Distribution
SMC 10.39	Special Events
SMC 10.40	Itinerant Vendors
SMC 10.41A	Special Police Officers
SMC 10.43	Telephone and Telegraph Construction
SMC 10.45	Used Goods
SMC 10.47	Emergency Medical Transport

SMC 10.48	False Alarms
((~~SMC 10.51~~))	((~~Mobile Food Vendors~~))
SMC 10.515	Fair Meal Delivery Requirements
SMC 10.52	Short Term Rentals
SMC 10.56	Reality-Based Police Shows
SMC 10.60.070	Interference with Health Care Facilities or Providers
SMC 10.60.080	Graffiti Offenses
SMC 10.63	Property Maintenance and Use Standards
SMC 10.68	Chronic Nuisance Properties
SMC 10.70	Noise Control
SMC 10.74	Offenses Involving Animals
SMC 10.81	Community Health Impact Areas
SMC 10.83	Sale or Distribution of Kratom Products Prohibited
SMC Title 12	**Public Ways and Property**
SMC 12.01	Improvement, Maintenance of Public Ways
SMC 12.02	Obstruction, Encroachment of Public Ways
SMC 12.06A	Park Code
SMC 12.15	Activation of Public Places
SMC Title 13	**Public Utilities and Services**
SMC 13.02	Solid Waste
SMC 13.03	Sewers
SMC 13.03A	Pretreatment
SMC 13.04	Water
SMC 13.05	Interference with Utilities
SMC Title 15	**Environmental Stewardship**

SMC 15.01	Commute Trip Reduction
SMC 15.04	Smoking in Public Places
SMC 15.06	Preservation of Salvageable Materials
SMC Title 16A	**Transportation**
SMC 16A.05	Stopping, Standing, Parking, and Loading Regulations
SMC 16A.60	Rules of the River
SMC 16A.63	Golf Cart and Alternative Vehicle Zones
SMC 16A.65	Use of City-Authorized Utility Vehicles on Public Property
SMC Title 17C	**Land Use Standards**
SMC 17C.111	Residential Zones
SMC 17C.120	Commercial Zones
SMC 17C.122	Center and Corridor Zones
SMC 17C.124	Downtown Zones
SMC 17C.130	Industrial Zones
SMC 17C.160	North River Overlay District
SMC 17C.170	Special Height Overlay Districts
SMC 17C.180	Airfield Overlay Zones
SMC 17C.200	Landscaping and Screening
SMC 17C.210	Nonconforming Situations
SMC 17C.220	Off-site Impacts
SMC 17C.230	Parking and Loading
SMC 17C.240	Signs
SMC 17C.300	Accessory Dwelling Units
SMC 17C.305	Adult Business
SMC 17C.310	Animal Keeping

SMC 17C.315	Bed and Breakfast
SMC 17C.316	Short Term Rentals
SMC 17C.319	Commercial Vehicle Use and Recreational Camping
SMC 17C.320	Conditional Uses
SMC 17C.325	Drive-through Facilities
SMC 17C.330	Group Living
SMC 17C.335	Historic Structures – Change of Use
SMC 17C.340	Home Occupations
SMC 17C.345	Manufactured Homes and Mobile Home Parks
SMC 17C.350	Mini-storage Facilities
SMC 17C.355A	Wireless Communication Facilities
SMC 17C.360	Special Use Temporary Permit
SMC 17C.390	Mobile Food Vending
SMC Title 17D	**City-wide Standards**
SMC 17D.060	Stormwater Facilities
SMC 17D.100	Historic Preservation
SMC Title 17E	**Environmental Standards**
SMC 17E.010	Critical Aquifer Recharge Areas – Aquifer Protection
SMC 17E.020	Fish and Wildlife Conservation Areas
SMC 17E.040	Spokane Geologically Hazardous Areas
SMC 17E.060	Shoreline Regulations
SMC 17E.070	Wetlands Protection
SMC Title 17F	**Construction Standards**
SMC 17F.030	Boiler and Pressure Vessel Code
SMC 17F.040	Building Code

SMC 17F.050	Electrical Code
SMC 17F.060	Elevator Code
SMC 17F.070	Existing Building and Conservation Code
SMC 17F.080	Fire Code
IFC	International Fire Code
SMC 17F.090	Mechanical Code
SMC 17F.100	Plumbing Code
SMC 17F.110	International Wildland-Urban Interface Code
SMC Title 17G	**Administration and Procedures**
SMC 17G.010	Building and Construction Permits
SMC 17G.050	Hearing Examiner
SMC Title 18	**Human Rights**
SMC 18.01	Law Against Discrimination
SMC 18.02	Nondiscrimination in Employment Practices
SMC 18.03	Nondiscrimination in Housing Practices
SMC 18.06	Protections for Persons with Disabilities
SMC 18.09	Nuclear Weapons Free Zone

C. If a violator is found to be a repeat offender, the violator will be subject to a penalty of $2,500 per violation in addition to the value of the underlying violation if the violation occurred on property whose permitted or primary use is residential as defined in SMC 17C.190.

D. If a violator is found to be a repeat offender, the violator will be subject to a penalty of $5,000 per violation in addition to the value of the underlying violation if the violation occurred on property whose permitted or primary use is commercial, industrial, institutional, or other use as defined in SMC 17C.190.

E. A repeat offender is defined as an owner and/or occupant of a private property who has one or more committed finding(s) for violation of the regulations set forth or referenced in this chapter, at the same site or on a different tax parcel under the same ownership or occupancy, two times within 12 months from the date of the current violation.

Section 14. Severability. If any section, subsection, sentence, clause, phrase, or word of this ordinance should be held to be invalid or unconstitutional by a court of competent jurisdiction, such invalidity or unconstitutionality thereof shall not affect the validity or constitutionality of any other section, subsection, sentence, clause, phrase, or word of this ordinance.

Section 15. Clerical Errors. Upon approval by the city attorney, the city clerk is authorized to make necessary corrections to this ordinance, including scrivener's errors or clerical mistakes; references to other local, state, or federal laws, rules, or regulations; or numbering or referencing of ordinances or their sections and subsections.

PASSED by the City Council on _____

_____
Council President

Attest:

_____
City Clerk

_____
Mayor

Approved as to form:

_____
City Attorney

_____
Date

_____
Effective Date

Memorandum

Office of the Mayor

DATE: October 27, 2026

FROM: Adam McDaniel – Policy Advisor, Office of the Mayor

TO: Councilmember Kate Telis, Chair, Public Safety & Community Health Committee & Councilmember Paul Dillon

RE: Modernizing and streamlining the City of Spokane's Civil Infraction System

This memo recommends the adoption of an ordinance to modernize and streamline the City's civil infraction system by adopting the state procedures by reference and removing code that conflicts with court rules. This ordinance intends to improve Code Enforcement and Municipal Court administration and disposition of civil infractions.

Executive Summary – Civil Infraction System

I. **Background**: The Washington state civil infraction system was created in 1987. The City of Spokane's civil infraction system was created through Ordinance C31589 in 1996. The City Council adopted Ordinance C36702 in 2025, establishing a single default class (Class 1) for all civil infractions.

II. **Issue**: The Spokane Municipal Code contains references and requirements that conflict with the civil infraction procedures outlined in state law and court rules.

Proposed Ordinance Table of Contents

Section 1. New Section SMC 01.05.005
Section 2. Amends SMC 01.05.020
Section 3. Amends SMC 01.05.040
Section 4. Repeals SMC 01.05.050
Section 5. Amends SMC 01.05.060
Section 6. Repeals SMC 01.05.070
Section 7. Repeals SMC 01.05.080

Section 8. Repeals SMC 01.05.090
Section 9. Repeals SMC 01.05.100
Section 10. Repeals SMC 01.05.110
Section 11. Repeals SMC 01.05.120
Section 12. Amends SMC 01.05.140
Section 13. Amends SMC 01.05.151
Section 14. Severability
Section 15. Clerical Errors

Section 1. New Section SMC 01.05.005 – Chapter 7.80 RCW Adopted by Reference

- This new section adopts RCW Chapter 7.80 – Civil Infractions by reference.

Section 2. Amends SMC 01.05.020 – Enforcement Officer Defined

- This amendment changes the title of the section from 'Administrative Responsibilities' to 'Enforcement Officer Defined'

- RCW 7.80.040 uses the term 'Enforcement Officer'. The section is updated to use the term 'Enforcement Officer' to be consistent with state law.

- This section is also updated to remove reference to SMC 03.01A, which was replaced by SMC 03.01B.

Section 3. Amends SMC 01.05.040 – Notice of Infraction Process

- This amendment changes the title of the section from 'Notice of Violation or Notice of Infraction' to 'Notice of Infraction Process' as *Notice of Infraction* is the term used in state law and court rules to describe the civil proceedings initiated in a court of limited jurisdiction pursuant to a statute that authorizes offenses to be punished as infractions.

- This section clarifies that the Notice of Infraction form and procedures are established by RCW 7.80 and the Washington State Court Rules: Infraction Rules for Courts of Limited Jurisdiction (IRLJ), or Spokane Municipal Court Local Rules.

Section 4. Repeals SMC 01.05.050 – Notice of Infraction

- This section is repealed as the Notice of Infraction procedures and form are established in RCW 7.80.050, RCW 7.80.070, IRLJ Rule 2.1, and IRLJ Rule 2.2.

Section 5. Amends SMC 01.05.060 – Person Receiving Notice – Identification and Detention

- This amendment removes the code reference to SMC 01.05.050, which is repealed by this ordinance. The language for *Identification and Detention* is required and consistent with RCW 7.80.060.

Section 6. Repeals SMC 01.05.070 - Response to Notice of Infraction

- This section is repealed as response to notice procedures are established by RCW 7.80.070, RCW 7.80.080, and IRLJ Rule 2.4.

DRAFT

- Response dates were changed by the legislature in 2026 through HB 2178 from 15 days to 30 days from the date the notice is personally served or, if the notice is served by mail, within 33 days of the date the notice is mailed. However, the code revisers may have missed updating RCW 7.80.080(1), which still refers to a response needed within 15 days of issuance of the notice of infraction.

Section 7. Repeals SMC 01.05.080 - Failure to Respond

- This section is repealed as procedures for the failure to respond to a notice of infraction are outlined in RCW 7.80.080 and IRLJ Rule 2.5.

Section 8. Repeals SMC 01.05.090 - Contested Hearings – Preliminary Proceedings

- This section is repealed as the preliminary proceedings for contested hearings are provided in IRLJ Rule 3.1.

Section 9. Repeals SMC 01.05.100 - Procedure at Contested Hearing

- This section is repealed as the procedures at contested hearings are provided in IRLJ Rule 3.3 and SPMIRLJ Rule 3.3.

- Disposition, including monetary penalties and community restitution, is provided for in RCW 7.80.120, RCW 7.80.130, RCW 7.80.140 and RCW 7.80.160, as well as IRLJ Rule 3.3, IRLJ Rule 3.4, and IRLJ Rule 3.6.

Section 10. Repeals SMC 01.05.110 - Hearing on Mitigating Circumstances

- This section is repealed as the procedures for hearings on mitigating circumstances is provided in RCW 7.80.110 and IRLJ Rule 3.4.

- Additionally, this code section conflicts with SPMIRLJ Rule 3.4, which provides that a mitigation hearing is heard by written statement.

Section 11. Repeals SMC 01.05.120 – Failure to Appear

- This section is repealed as the procedures for failure to appear are provided in RCW 7.80.080 and IRLJ Rule 3.2.

Section 12. Amends SMC 01.05.140 – Certificate of Correction Process

- This amendment adjusts the title of the section to indicate that the section describes the Certificate of Correction *process*.

- This update clarifies that an enforcement officer may (at their discretion) reinspect a violation and issue a certificate of correction if the violation has been corrected. This allows the Certificate of Correction to be filed with municipal court and provides that the

court may dismiss the latest infraction without prejudice.

- This section reaffirms the discretion of enforcement officers for the reinspection and issuance of a certificate of correction as well as the discretion of the municipal court for disposition.

Section 13. Amends SMC 01.05.151 – Civil Infraction Penalty Schedule

- This amendment removes the following code chapters that have since been repealed or recodified in other chapters of the Spokane Municipal Code:

  SMC 10.28 – Sidewalk Cafes
  SMC 10.51 – Mobile Food Vendors

- This amendment adds the following code chapters that have since been adopted, for which civil infractions may be issued for violations:

  SMC 10.47 – Emergency Medical Transport
  SMC 10.83 – Sale or Distribution of Kratom Products Prohibited
  SMC 12.15 – Activation of Public Spaces

Section 14. Severability

- Standard severability clause

Section 15. Clerical Errors

- Standard clerical errors clause

DRAFT

Agenda Sheet for City Council: **Committee:** Urban Experience **Date:** 10/15/2026 **Committee Agenda type:** Discussion		**Date Rec'd**	10/7/2026
		Clerk's File #	ORD C36975
		Cross Ref #	
Council Meeting Date: 12/02/2026		**Project #**	
Submitting Dept	PLANNING SERVICES	**Bid #**	
Contact Name/Phone	AMANDA BECK X6414	**Requisition #**	
Contact E-Mail	ABECK@SPOKANECITY.ORG		
Agenda Item Type	Hearings		
Council Sponsor(s)	ZZAPPONE PDILLON		
Sponsoring at Administrators Request	NO		
Lease? NO	**Grant Related?** NO	**Public Works?** NO	
Agenda Item Name	ORDINANCE CONFIRMING AND APPROVING THE DOWNTOWN PBIA 2027		

Agenda Wording

An Ordinance approving and confirming the 2027 Assessments and Assessment Roll for the Downtown Parking and Business Improvement Area.

Summary (Background)

The Downtown PBIA, also known as the Downtown Business Improvement District (DBID), collects an annual special assessment from property owners within the district to provide funding for programs and services, as outlined in Chapter 04.31C SMC. The Downtown Spokane Partnership (DSP) administers and operates these programs through a contract with the City of Spokane, on behalf of the Downtown Ratepayer Advisory Board. An annual management plan and budget outline the proposed programs, services, and expenditures recommended in administration of the BID as modeled on the projected 2027 Assessment. Acting as a board of equalization for the purpose of considering objections or comments made concerning the assessment roll, City Council may correct, revise, raise, lower, change or modify the assessment, assessment roll, management plan, and or the proposed budget. Per the annual assessment process set forth in Chapter 04.31 SMC: • City Council set the assessment roll hearing date by resolution; • The draft Assessment Roll will be made available for public viewing through the City Clerk's Office on November 2, 2026; • A mailed notice to property owners identified on the assessment roll will be mailed fifteen days prior to the public hearing to vote on the assessment roll; • City Council will hold a public hearing on December 2, 2026, and then vote on the 2027 assessment and assessment roll; • At the public hearing City Council will also vote on the proposed 2026 management plan and budget for the services to be provided by DSP on behalf of the ratepayers; and • Assessments are due January 31, 2027 (if paid in half the remainer is due July 31, 2027).

What impacts would the proposal have on historically excluded communities?

In administering the BID contract, the Downtown Spokane Partnership is tasked with assisting existing and potential businesses that want to be located with the Downtown BID, and this can include women and minority owned businesses that benefit from an entity that manages district-wide marketing and events to attract customers that support local Spokane businesses. Ratepayer Board positions are designated by geography, business, and property type to ensure that a variety of interests are well represented and guide decision making for the BID. This includes utilizing the Security Ambassadors to complete additional vehicle

How will data be collected, analyzed, and reported concerning the effect of the program/policy by racial, ethnic, gender identity, national origin, income level, disability, sexual orientation, or other existing disparities?

The BID Manager completes an annual management plan as part of the annual special assessment process, which includes information on how the BID serves ratepayers. No specific information is broken down by racial, gender identity, or other metrics at this time. Feedback from ratepayers to the Downtown Ratepayer Advisory Board is one avenue through which both the City and DSP know if ratepayers believe they are receiving services commensurate with the collected special assessment.

How will data be collected regarding the effectiveness of this program, policy, or product to ensure it is the right solution?

Hosted events, grants to new businesses, and response calls from Clean & Green and the Security Ambassadors teams, which are detailed in the BID management plan, provide data for effectiveness of the Downtown BID. The ability to maintain, or expand, services as funded through the special assessments would be a positive indicator that the BID is self-sufficient and appropriately servicing ratepayers. The BID also works with StartUp Spokane to collect Placer.ai data on foot traffic for events and promotion of the district.

Describe how this proposal aligns with current City Policies, including the Comprehensive Plan, Sustainability Action Plan, Capital Improvement Program, Neighborhood Master Plans, Council Resolutions, and others?

Programs administered by the DSP support several strategies in the recently updated Spokane Downtown Plan, such as energize streets and alleys that are activated for pedestrians (Live by Five, 509 Day, Festa Italiana, etc.) and supporting existing and emerging businesses downtown (Strategy LWP2.3). The Downtown BID aligns with the vision and values of Comprehensive Plan Chapter 7, Economic Development, and policy ED 1.2. This resolution sets the hearing for the ordinance that confirms and approves the special assessment for 2024, thereby ensuring the Downtown BID has the funds to provide ratepayer services established in their contract which supports economic development focused specifically on downtown, a cultural and commercial

Council Subcommittee Review

Fiscal Impact

Approved in Current Year Budget?	
Total Cost	$
Current Year Cost	$
Subsequent Year(s) Cost	$

Narrative

The Downtown PBIA is meant to be self-funding through the collection of the special assessments. This expansion should not materially add to city staffing needs.

Amount		Budget Account
Select	$	#
Select	$	#
Select	$	#
Select	$	#
Select	$	#
Select	$	#

Funding Source	Recurring
Funding Source Type	Program Revenue

Is this funding source sustainable for future years, months, etc?

A PBIA is set up to fund specific services for its geographic area above and beyond the baseline services provided by the City.

Expense Occurrence	

Other budget impacts (revenue generating, match requirements, etc.)

Approvals		Additional Approvals	
Dept Head	GARDNER, SPENCER		
Division Director	MACDONALD, STEVEN		
Accounting Manager	ZOLLINGER, NICHOLAS		
Legal	DUGGAN, ANDI		
For the Mayor	PICCOLO, MIKE		

Distribution List

Emilie Cameron; ECameron@downtownspokane.org	Doug Kapelke; doug.kapelke@stcu.org
amcdaniel@spokanecity.org	smacdonald@spokanecity.org
sgardner@spokanecity.org	eking@spokanecity.org

ORDINANCE NO. C36975

An Ordinance approving and confirming the 2027 Assessments and the Assessment Roll for the Downtown Spokane Parking and Business Improvement Area, as codified and amended in Chapter 04.31C SMC, and setting an effective date.

WHEREAS, on November 11, 2026, the Spokane City Council passed Resolution 2026–00## which provided notice and set a date for hearing on the assessments to be levied under the above identified ordinance; and

WHEREAS, pursuant to Resolution 2026–00##, a public hearing was held on December 2, 2026 to take public testimony regarding the assessments and assessment roll for the Downtown Spokane Parking and Business Improvement Area (PBIA); and

WHEREAS, the assessment roles have been on file in the Office of the City Clerk for public review and inspection; and

WHEREAS, the City Council, through this ordinance, intends to levy assessments in the Downtown PBIA to provide programs and services that will specifically benefit the properties and businesses in the PBIA.

NOW, THEREFORE, the Spokane City Council does ordain:

Section 1. Assessment Formula. The method of assessment is based upon the Assessment Formula outlined in SMC 04.31.040, including benefit zones and assessment classifications, and is calculated for the 2027 Assessment in Appendix B.

Section 2. Specially Benefitted Properties. Each of the businesses, multifamily residential, and mixed-use buildings, as described in RCW 35.87A.020, shown upon said Roll are hereby declared to be specially benefited by the programs authorized in Ordinance C32923, in at least the amount levied against the same.

Section 3. 2027 Assessments and Assessment Roll. The 2027 Assessments and Assessment Roll of the Downtown Spokane Parking and Business Improvement Area are hereby approved and confirmed, as included in Appendix B.

Section 4. Certification and Transmittal of Assessment Roll. The City Clerk is hereby directed to certify and transmit the assessment roll to the City Treasurer for collection pursuant to Spokane Municipal Code and state law.

Section 5. Payment of 2027 Assessments. The assessments for businesses, multifamily residential, and mixed-use buildings shown in the Assessment Roll are due

on January 31, 2027. The ratepayer may elect to make payments in two installments with the first half of the assessment due and payable on January 31, 2027, and the second half of the assessment due and payable on July 31, 2027. Prior to the due date, the ratepayers shall be sent a bill stating the amount of the assessment due and payable.

Section 6. Disputes of Assessment. Within sixty (60) days of the approval of the 2027 Assessment, assessment roll, and the management plan and budget, any ratepayer aggrieved by the amount of an assessment shall request a meeting and/or hearing before the Downtown PBIA Ratepayer Advisory Board. If not satisfied with the decision of the Ratepayer Advisory Board, the ratepayer must appeal the decision within ten (10) days from the date of the decision to the City's Hearing Examiner, in the manner provided for in the City's Municipal Code. Failure to request a hearing shall result in a waiver of the right to challenge the assessment.

Section 7. This ordinance, being one to implement the Downtown Spokane Parking and Business Improvement Area and confirming assessments therefor, shall take effect and be in full force from and after the date of its passage pursuant to Section 19.A of the Spokane City Charter.

PASSED by the City Council on this _____ day of December, 2026.

_____
Council President

Attest:

_____
City Clerk

Approved as to form:

_____
Assistant City Attorney

_____
Mayor

_____
Date

_____
Effective Date

APPENDIX B – 2027 Downtown PBIA

DOWNTOWN PARKING AND BUSINESS IMPROVEMENT AREA
2027 Assessment Formula

Per Section 04.31.040(D) of the Spokane Municipal Code, increases in the amounts of the special assessments will be adjusted based on the change of the Consumer Price Index for All Urban Consumers (CPI-U) West Region.

The CPI-U West Region between July 2025 and July 2026 was 3.0 percent, therefore an inflationary factor was used to increase the assessment formula. The minimum benefit zone assessment was also increased by the 3.0 percent inflationary factor.

Tenant Assessments				
All tenant assessments are based upon square footage of space per lease, except where noted. The 2027 minimum assessment for property tenants is $119.75 per tenant at a property.				
Type of tenant	**Zone 1**	**Zone 2**	**Zone 3**	**Zone 4**
Retail tenants - Ground floor and skywalk	$0.36	$0.21	$0.17	$0.00
Office tenants - Ground floor and skywalk	$0.21	$0.20	$0.16	$0.00
Office and retail tenants - Upper floors and basement	$0.16	$0.15	$0.13	$0.00
Manufacturing tenants	$0.16	$0.15	$0.13	$0.00
Commercial parking - Per parking space	$4.96	$4.14	$3.31	$0.00
Commercial theaters - Per seat	$4.14	$3.15	$2.66	$0.00
Multifamily residential - Per unit	$6.63	$5.79	$4.96	$0.00

Property Owner Assessments				
Property owner assessments are based upon the current year's assessed values for land and improvements, no exemptions, and are calculated at a rate per $1,000 of total assessed value. Each property owner, including its tenants, shall be assessed under both the tenant and property owner formulas. There is an annual minimum assessment of $119.75 per parcel.				
Type of property	**Zone 1**	**Zone 2**	**Zone 3**	**Zone 4**
Private property	$1.20	$1.20	$0.76	$0.00
Government	$0.87	$0.87	$0.65	$0.00
Residential/Condominiums - Per unit, max of $234.50	$0.65	$0.65	$0.44	$0.00
Public Facilities District	$0.34	$0.34	$0.34	$0.00
Combined Owner/Tenant				
Hotel and motels - Per room	$33.11	$33.11	$33.11	$0.00
Public parks - Per acre	$0.00	$0.00	$0.00	$198.06

From:	Tim Collins
To:	Mayor; City Council Members and Staff; City Council Testimony; info@downtownspokane.org
Subject:	Downtown Spokane Partnership
Date:	Tuesday, November 17, 2026 1:38:38 PM

[CAUTION - EXTERNAL EMAIL - Verify Sender]

Dear Spokane City Leaders,

I am writing to you today to express my personal views as Director of Athletics at Eastern Washington University and a member of the Spokane Sports community. This is not the official stance of EWU but I thought it was important to share my perspective.

I want to express my support for the Downtown Spokane Partnership (DSP) and its continued administration of the Downtown Business Improvement District (BID) through a five-year agreement.

A clean, safe, vibrant and welcoming downtown is essential to the overall success of our region. Spokane's ability to attract and host collegiate championships, regional and national sporting events, and other significant visitor experiences is directly connected to the perception and experience people have when they visit our community. For many of these visitors, downtown Spokane is their first impression of our region and an important part of their overall experience. Over 90% of our visiting teams and fans stay in Spokane when they travel to Eastern Washington.

At Eastern Washington University, we recognize that our success extends beyond our campus and athletic facilities. Our student-athletes, coaches, alumni and fans are part of a broader Spokane region, and our ability to attract visitors, generate economic activity and build meaningful partnerships is strengthened by a thriving downtown. The work of DSP contributes to that broader regional effort and helps ensure Spokane remains competitive when event organizers evaluate destinations.

I believe continuity in leadership, accountability to those who fund the BID, and a strong voice for ratepayers are critical to its long-term effectiveness. DSP has established relationships, institutional knowledge and a demonstrated commitment to downtown priorities. A five-year agreement provides the stability necessary to build on that work while maintaining the ratepayer-focused approach that makes the BID effective.

I encourage the City of Spokane to support a five-year agreement with the Downtown Spokane Partnership, preserve meaningful ratepayer representation through the BID Ratepayer Advisory Board, and ensure BID resources continue to serve the priorities of those who invest in downtown.

A strong downtown is not simply a downtown issue. It is a regional economic development, tourism, higher education and quality-of-life issue. Its success benefits all of us who call this region home and those who come here to visit.

Thank you for your consideration and your commitment to Spokane's future.

Sincerely,

Tim Collins

From:	Kim Floyd
To:	Mayor; City Council Members and Staff; City Council Testimony
Subject:	BID Funding
Date:	Tuesday, November 17, 2026 12:24:26 PM
Attachments:	image001.png image002.png image003.png image004.png image005.png image006.png

---

[CAUTION - EXTERNAL EMAIL - Verify Sender]

Dear Mayor and Council,

My name is Kim Floyd. I am an employee and property manager who has worked downtown for 30+ years. I encourage you to renew the DSP contract to manage the Business Improvement District. The DSP has done a great job for thirty years providing an environment that makes it cleaner, safer and a better place for me to work. In addition, I encourage you to keep BID funds focused on BID services that are identified by the ratepayers and not use them for other City services. We need the clean team and security ambassadors working for our safety and the work they do greatly enhances law enforcement work at a significant discount to the cost of police officers.

Thank you for your consideration,

Kim Floyd
Commercial Portfolio Manager
Kiemle Hagood
601 W. Main Ave., Suite 400
Spokane WA 99201
509-838-6541 office
509-755-7522 direct
kimf@kiemlehagood.com

KIEMLE HAGOOD

Real Estate Brokerage in Washington

From:	Genevieve Mossman
To:	Mayor; City Council Members and Staff; City Council Testimony
Cc:	Genevieve Mossman
Subject:	Re: Downtown Spokane Partnership Contract Renewal and Business Improvement District Management
Date:	Tuesday, November 17, 2026 12:19:29 PM
Attachments:	image002.png image003.png image004.png image005.png
Importance:	High

[CAUTION - EXTERNAL EMAIL - Verify Sender]

November 17, 2026

Sent via email to:
Mayor@spokanecity.org
Citycouncil2@spokanecity.org
testimony@spokanecity.org

Re: Downtown Spokane Partnership Contract Renewal and Business Improvement District Management

Dear Mayor and Councilmembers,

My name is Genevieve Mossman, I am a parent, an author, a podcast co-host, and an employee of Kiemle Hagood, where I have worked in downtown Spokane for six years. I also worked for an attorney at the Paulsen Center in Downtown Spokane from 2018 to 2019. Downtown's future is personal to me. I work here throughout the week, and the decisions you make affect my safety, my workplace, and the community I care about.

Over the years, I have witnessed troubling changes. I have seen the effects of homelessness and the drug crisis on our streets, alongside vacant storefront, challenges attracting and retaining tenants, and businesses choosing to relocate. Behind those changes are people – employees, business owners, and families – who want downtown to succeed but increasingly question whether they feel safe spending time there.

As a parent, I take those concerns personally. No one should have to walk to work wondering whether they will encounter a threatening situation. No parent should have to question whether downtown is a place they can comfortably bring their children. And no business owner should have to face these challenges without dependable support.

Compassion for people experiencing homelessness or addiction and a commitment to public safety are not competing responsibilities. Our community needs both. We can recognize the humanity of people in crisis while also insisting on clean, safe, welcoming public spaces for everyone.

That is why I urge you to renew the Downtown Spokane Partnership's contract to manage the Business Improvement District and to keep BID funds focused on the services identified by the ratepayers who fund them – ***not redirect those dollars to***

other City services.

For thirty years, DSP has helped make downtown cleaner, safer, and more welcoming. From my perspective as someone who works here, that work matters. The Clean Team and Security Ambassadors provide a visible, practical presence that downtown employees and businesses count on. Their work complements *(to enhance something so they go well together)* law enforcement; it does not replace it, nor should BID funding become a substitute for the City's broader responsibilities.

The "broken windows" theory offers a useful way to explain why everyday maintenance deserves attention: visible signs of neglect can send the message that no one is caring for a place. To me, keeping downtown clean, addressing damage promptly, and maintaining a dependable presence are not merely cosmetic priorities. They communicate that our downtown matters – and so do the people who work, live, and visit here. That is why I view the Clean Team and security ambassadors as essential investments, not expendable extras.

The impact of your decisions extends beyond the council chambers. It reaches the employee walking to their car, the small-business owner opening for the day, the prospective tenant deciding whether to invest, and the family deciding whether to come downtown at all.

Please renew DSP's contract, preserve the intended purpose of BID funds, and protect the services that those of us downtown rely on every day. We need a downtown people choose to visit, businesses choose to invest in, and employees feel safe coming to work in. Please send a confirmation of your receipt of my email.

Thank you for your time and consideration, and for your service to our community.

Sincerely,

Genevieve Mossman
Front Desk Receptionist
Kiemle Hagood
601 W. Main Ave, Ste 400
Spokane, WA 99201
509.838.6541
Genevieve.Mossman@kiemlehagood.com

KIEMLE HAGOOD

From:	Dominic Dickerson
To:	Mayor; City Council Members and Staff; City Council Testimony
Subject:	DSP Contract Renewal and BID Management
Date:	Tuesday, November 17, 2026 11:38:24 AM
Attachments:	image.png image.png image.png image.png image.png image.png

---

[CAUTION - EXTERNAL EMAIL - Verify Sender]

Dear Mayor and Council,

My name is Dominic Dickerson, and I work in downtown Spokane. I am a broker, who has worked downtown for two years. Prior to that, I worked at Egnyte downtown for 5 years. I encourage you to renew the DSP contract to manage the Business Improvement District. The DSP has done a great job for thirty years, providing an environment that is cleaner, safer, and a better place for me to work. In addition, I **encourage you to keep BID funds focused on BID services identified by the ratepayers and not use them for other City services**. We need the clean team and security ambassadors working for our safety, and the work they do greatly enhances law enforcement at a significant discount to the cost of police officers. Seeing the clean team and ambassadors out in the field provides a significant benefit to the downtown core. When out-of-town visitors see the work these folks do, it creates a meaningful impression that they are safe and that we care about the look, the feel, and the vibe downtown. **You should extend a long-term contract to DSP** and figure out how to add more police to the downtown streets with city money, which is literally your responsibility. These funds **should not be redirected from their original purpose** to compensate for the inability to properly manage the city budget.

Sincerely,

Dominic Dickerson
Commercial Sales and Leasing
Kiemle Hagood
601 W. Main Ave., Ste. 400
Spokane, WA 99201
M: 509.808.0066
D: 509.755.7507
dominic.dickerson@kiemlehagood.com

KIEMLE HAGOOD

Idaho Agency Disclosure Brochure

Real Estate Brokerage in Washington

From:	Chase Soehren
To:	Mayor; City Council Members and Staff; City Council Testimony
Subject:	Downtown Spokane Partnership
Date:	Tuesday, November 17, 2026 11:26:24 AM
Attachments:	image002.png image003.png image004.png image005.png image006.png

---

[CAUTION - EXTERNAL EMAIL - Verify Sender]

Dear Mayor Brown and Members of the City Council,

My name is Chase Soehren, and I'm a commercial property manager at Kiemle Hagood. I've worked downtown for 4 years, and I manage over 900,000 square feet of office, retail, and industrial space, a good share of it inside the Business Improvement District. I'm also on the BOMA Spokane board, so I hear regularly from other owners and managers about what's going on downtown.

I'm asking you to do two things: renew the DSP's contract to manage the BID for longer than one year and keep BID money going to the services ratepayers are paying for.

On the contract, a one-year term makes it hard for the DSP to plan, hire, and hold on to good people. My tenants and owners count on the Clean Team and Security Ambassadors being out there every day. You don't get that kind of consistency from an organization that doesn't know if it will be around next year.

On the funding, I support hiring more police officers. But paying for them is the City's responsibility. Downtown property owners agreed to assess themselves for services on top of what the City already provides, not to cover what the City already owes. If BID money starts going to police, owners lose their say in how those services are run, and it breaks the agreement the district was built on.

I see the value of the BID in my work all the time. When a tenant calls about someone camped in an entryway or trash piling up by a building, the ambassadors and Clean Team are often the first ones there. They know the area and they work well with our staff. That help costs a lot less than a police officer, and it frees officers up for the calls that really need them. It also matters when I'm talking with a prospective tenant about leasing downtown. Being able to point to those services makes a difference.

Downtown has had a tough few years. Now is not the time to make the DSP's footing less certain.

Thank you for your time and for your work on this.

Thanks,

Chase Soehren
Commercial Property Manager
Kiemle Hagood
601 W. Main Ave, Ste 400
Spokane, WA 99201
C: (509) 755-7510
Chase.Soehren@KiemleHagood.com

KIEMLE HAGOOD

Real Estate Brokerage in Washington

From:	Claudia Clifton
To:	Mayor; City Council Testimony
Subject:	RE: DSP Contract Renewal and BID Management
Date:	Tuesday, November 17, 2026 11:24:26 AM
Attachments:	image001.png

[CAUTION - EXTERNAL EMAIL - Verify Sender]

Dear Mayor and Council,

My name is Claudia, and I work in downtown Spokane. I am an employee ,who has worked in downtown for close to 11 years now which is when I first moved to Spokane. I encourage you to renew the DSP contract to manage the Business Improvement District. The DSP has done a great job for thirty years, long before I arrived in Spokane, providing an environment that makes it cleaner, safer and a better place for all of us to work. In addition, I encourage you to keep BID funds focused on BID services that are identified by the ratepayers and not use them for other City services. We need the clean team and security ambassadors working for our safety and the work they do greatly enhances law enforcement work at a significant discount to the cost of police officers.

Thank you for your consideration,

Name, title

Claudia Clifton
Administrative Assistant – Commercial Management
Kiemle Hagood
601 W. Main Ave., Ste. 400
Spokane, WA 99201
Direct Line: 509.755.7567
Corporate Office: 509.838.6541
Email: Claudia.clifton@kiemlehagood.com

KIEMLE HAGOOD
Celebrating 50 Years | Since 1971

From: Janelle Lee
To: Mayor; City Council Members and Staff; City Council Testimony
Subject: DSP/BID support
Date: Tuesday, November 17, 2026 11:09:54 AM

[CAUTION - EXTERNAL EMAIL - Verify Sender]

Hello -

As a downtown resident for the last almost 12 years and a BID payor, the many things that the DSP and the BID do are very important to the well-being of our city.

Please continue to support them!

- **Renew DSP's contract with the stability needed to plan, retain staff and sustain services.**
- **Adopt the ratepayer-supported 2027 BID budget** and protect its clean, safe and business-support programs.
- **Fund stronger City police coverage** while preserving BID assessments for enhanced services and respecting ratepayers' priorities.

Thank you,

Janelle Lee
809 W Main Ave #205
Spokane, WA 99201

From:	Lori Troyer
To:	Mayor; City Council Members and Staff; City Council Testimony
Subject:	Renew DSP & BID
Date:	Tuesday, November 17, 2026 11:00:35 AM
Attachments:	image.png

[CAUTION - EXTERNAL EMAIL - Verify Sender]

Dear Mayor and Council,

My name is Lori Troyer, and I work in downtown Spokane. I am a Senior Commercial Property Manager, who has worked in downtown Spokane for over 25 years. I encourage you to renew the DSP contract to manage the Business Improvement District. The DSP has done a great job for thirty years providing an environment that makes it cleaner, safer, and a better place for all of us to work. In addition, I encourage you to keep BID funds focused on BID services that are identified by the ratepayers and not use them for other City services. We need the clean team and security ambassadors working for our safety and the work they do greatly enhances law enforcement work at a significant discount to the cost of police officers. Far too often we the people vote to set aside funds for a specific purpose then the people in office decide to use it for other things. This is NOT ok and represents an unauthorized use of funds.

Thank you for your consideration,

Lori Troyer

Lori Troyer|LEED Green Associate
Senior Commercial Property Manager
Kiemle Hagood
601 W Main, Ste 400
Spokane, WA 99201
509.755.7526 (Direct)
lori.troyer@kiemlehagood.com

KIEMLE HAGOOD
Celebrating 50 Years | Since 1971

Real Estate Brokerage in Washington

OOO 8/28

From:	shannon ahern
To:	Mayor; City Council Members and Staff; City Council Testimony; info@downtownspokane.org
Subject:	Support Downtown Spokane Partnership Contract Renewal and BID Priorities
Date:	Tuesday, November 17, 2026 10:53:37 AM

[CAUTION - EXTERNAL EMAIL - Verify Sender]

Dear Mayor and City Council Members,

As you know, this is a form letter, but I do agree with what it says. Having been in retail in downtown Spokane for almost 50 years, from the Book & Game Company in the Flour Mill in 1978 to today with the Liberty Building which houses two businesses we started-Auntie's and Uncle's, I love downtown Spokane. Over the past half-century, I have seen the downtown change in both good and bad ways. My sister-in-law, Chris O'Harra, and I both served on the BID board in the 90's and feel the DSP and BID have worked hard to keep downtown safe, beautiful and viable for the people of Spokane County and for all who visit our wonderful city.

Downtown property owners and businesses have borne the brunt of the drug, mental illness and homeless issues/pain in the county. We need more help from the city, not more taxes. It was bad enough when all the parking lots got taxed more and now you want to take money from the BID funds to allow police to be on the streets downtown. Many of us already use our funds to hire security firms that protect our building all through the night. We hire staff to clean up and remove the graffiti off our building. We pay for new garbage dumpsters that the homeless have set on fire and for new glass windows that vandals have smashed.

The city has emptied the mental institutions onto downtown and the nonprofits (many of which I support) have chosen to offer social services for the homeless downtown. Downtown is where the homeless (often either drug-addicted or mentally ill) are placed and supported. So the city needs to help take care of those it placed downtown.

We need more compassion, more police support and more funds to keep downtown beautiful and thriving. But don't take funds from the one institution that is using its resources to attack the same issues as you are. And don't just tax the people/businesses suffering the consequences of the government's solution to a difficult problem. The solutions should be funded by all Spokane residents in the fairest way possible.

So here is the form letter:

As the owner of the Liberty Building and BID ratepayer, I am writing to urge your support for renewing the Downtown Spokane Partnership's contract and preserving the longstanding partnership that has helped make downtown Spokane cleaner, safer, more vibrant, and more economically competitive for more than 30 years.

I invest in the BID with the expectation that my dollars will support enhanced services and programs that directly benefit downtown. These investments are essential to downtown's success and should complement, not replace, the City's core responsibilities.

The DSP has a proven track record of delivering those services while remaining accountable to the ratepayers it serves. In fact, most DSP board members are BID ratepayers, ensuring that the organization's priorities remain aligned with downtown stakeholders.

As you consider future decisions affecting the BID, I ask that you:
• Renew the DSP's contract and continue this successful public-private partnership.
• Protect essential BID services that support a clean, safe, vibrant, and welcoming downtown.
• Adopt the Ratepayer Advisory Board's recommended 2027 budget and workplan to sustain services shaped by downtown ratepayer priorities.

• Respect ratepayer leadership by meaningfully engaging ratepayers the Advisory Board about how BID funds are invested
• Ensure BID funds remain dedicated to ratepayer-driven priorities that strengthen downtown's economic vitality.

Downtown businesses and property owners rely on the stability, expertise, and accountability that the DSP provides. Please ensure that BID investments continue to reflect the priorities of the ratepayers who fund them and the downtown community that benefits from them.

Thank you for your consideration and your commitment to a strong and successful downtown Spokane.

Sincerely,

Shannon Ahern
509.385.2369



203 N Washington, Suite 202
Spokane, WA 99201

From:	Lisa Mobley
To:	Mayor; City Council Members and Staff; City Council Testimony
Subject:	DSP Contract Renewal and BID Management
Date:	Tuesday, November 17, 2026 10:31:12 AM
Attachments:	image002.png image003.png image004.png image005.png image006.png

---

[CAUTION - EXTERNAL EMAIL - Verify Sender]

Dear Mayor and Council,

My name is Lisa Mobley, and I work in downtown Spokane. I am an employee of Kiemle Hagood Commercial Real Estate who has worked in downtown for 20+ years.

Multiple times a week, I see employees from DSP watering beautiful flower baskets, cleaning up disgusting sidewalks, and picking up garbage. I'm sure there are other duties that they have but these are the things I see and notice when I'm downtown every day. As I've seen over the years, the downtown area has made a lot of changes, some good, some bad. I believe the city strives to make the CBD a safe and desirable location for all; I can't imagine what that outcome would be without the hard-working staff of these programs keeping the downtown city streets as clean and inviting to visitors and natives alike. It's a daily battle to clean up after others who have no stake in the game, pride, and love for the city they live in. These kinds of programs are essential to all of us who work, live and visit Spokane.

I encourage you to renew the DSP contract to manage the Business Improvement District. The DSP has done a great job for thirty years providing an environment that makes it cleaner, safer and a better place for me to work. In addition, I encourage you to keep BID funds focused on BID services that are identified by the ratepayers and not use them for other City services. We need the clean team and security ambassadors working for our safety and the work they do greatly enhances law enforcement work at a significant discount to the cost of police officers.

Thank you for your time and consideration.

Lisa Mobley

Executive Assistant
601 W. Main Ave., Ste. 400
Spokane, WA 99201
Main: 509.838.6541
Direct & Fax: 509.755.7521
lisa.mobley@kiemlehagood.com

KIEMLE HAGOOD



This e-mail may be legally privileged and/or confidential. If you are not the intended recipient, please notify us and delete.

From: Eric Green
To: City Council Testimony
Subject: Support DSP and BID
Date: Tuesday, November 17, 2026 9:09:19 AM
Attachments: image.png

[CAUTION - EXTERNAL EMAIL - Verify Sender]

I am writing in support of renewing DSP's contract and adoption of the ratepayer-supported 2027 BID budget.



Eric Green, CFP®AIF®CKA®
Financial Planner

Quantum
FINANCIAL PLANNING

www.quantumplanning.com | 509-328-6653
720 W Boone Ave, Suite 100, Spokane, WA 99201

Need to share files with the Quantum Team securely?

To upload files securely to our team, Click here Secure folder

Please note that all email from this email system is subject to archival, monitoring, and or review by internal personnel and external regulators. This email and any attachments are for the use of the intended recipient and may contain confidential information. If you have received this email in error, please notify the sender and delete this email immediately.

From:	Blanca Gonzales
To:	Mayor; City Council Members and Staff
Cc:	City Council Testimony; info@downtownspokane.org
Subject:	Supporting Downtown Spokane | Davenport Hotels
Date:	Tuesday, November 17, 2026 8:58:29 AM
Attachments:	image001.png

[CAUTION - EXTERNAL EMAIL - Verify Sender]

Dear Mayor Brown and Spokane City Council,

As one of downtown Spokane's largest hospitality employers and a major destination for visitors, Davenport Hotels understands firsthand how closely our success is tied to the health and vitality of downtown Spokane. The Downtown Spokane Partnership (DSP) plays an important role in helping create an environment where businesses, residents, employees, and visitors can thrive.

DSP's impact can be seen every day through its Downtown Ambassadors, Clean Team, beautification efforts, support of local businesses, and promotion of downtown events. These services help improve the overall appearance, cleanliness, and activity level of downtown, all of which directly influence visitor perceptions and business performance.

At Davenport Hotels, thousands of guests visit downtown Spokane each year. Their experience extends beyond our hotels to local restaurants, shops, entertainment venues, and public spaces. A clean, safe, and welcoming downtown encourages guests to spend more time in the area, support local businesses, recommend Spokane to others, and return for future visits.

DSP provides measurable value by helping maintain cleaner streets, supporting economic activity, assisting visitors and businesses, and contributing to a more positive downtown environment. These efforts complement the City's work and help strengthen Spokane's reputation as a destination for tourism, conventions, business investment, and community events.

A successful downtown requires consistent investment and collaboration between public and private partners. DSP serves as a key partner in coordinating these efforts and delivering services that have a visible daily impact on downtown conditions.

Davenport Hotels values its partnership with DSP and strongly supports continued city investment in the organization. Maintaining these services helps support economic growth, visitor satisfaction, business retention, and the long-term success of downtown Spokane. Spokane's success depends on a vibrant downtown, and DSP remains an important contributor to that success

Sincerely,

Blanca Gonzales

DAVENPORT HOTELS

Blanca Urquidez Gonzales
Area Director of Revenue Management, Davenport Hotels
C: 214.885.6544
www.davenporthotelcollection.com

From:	Gordon Hester
To:	Mayor; City Council Members and Staff; City Council Testimony
Cc:	Gordon Hester
Subject:	DSP Contract Renewal and BID Management
Date:	Tuesday, November 17, 2026 8:57:31 AM
Attachments:	image.png image.png image.png image.png

[CAUTION - EXTERNAL EMAIL - Verify Sender]

Dear Mayor Brown and Members of the Spokane City Council,

I am writing to express my strong support for the long-term renewal of the Downtown Spokane Partnership's (DSP) management contract for the Downtown Spokane Business Improvement District (BID).

I have worked in downtown Spokane for 36 years, and our company, Kiemle Hagood, maintains its corporate headquarters in the heart of the Business Improvement District. We have been here since 1973 and currently manage approximately 750,000 square feet of commercial real estate within the BID boundaries. As a result, we have a significant financial and operational interest in the continued success of downtown Spokane.

I was working downtown when the Business Improvement District and Downtown Spokane Partnership were originally formed. I remember the vision and commitment of the business owners who recognized that downtown needed a dedicated funding mechanism to provide enhanced cleanliness, security, marketing, and other services that would support a healthy and vibrant central business district.

It is important to remember that the BID and DSP were initiatives of the downtown business community, not the City of Spokane. Business and property owners recognized the need, organized the effort, and supported the creation of a funding mechanism to pay for services above and beyond those traditionally provided by the City. They also encouraged City participation, recognizing that the City benefited directly through improved public safety, a stronger tax base, and enhanced conditions surrounding City-owned properties within the district.

The positive influence of these efforts over the ensuing decades is difficult to overstate. Downtown Spokane experienced a remarkable period of reinvestment, including the renovation of River Park Square, the reopening and restoration of the historic Davenport Hotel, construction of the Davenport Tower and Davenport Grand, and numerous other significant renovations and developments. While many factors contributed to these investments, I firmly believe the existence of the BID and the leadership of the DSP helped create an environment in which property owners and investors had the confidence to make substantial, long-term

commitments to downtown Spokane.

Throughout its history, the Downtown Spokane Partnership has been one of downtown's most consistent and effective advocates. The organization has championed the interests of downtown businesses, encouraged investment, and provided services that individual property owners could not reasonably accomplish on their own.

That role has become even more important in recent years. The challenges associated with the COVID pandemic, homelessness, drug use, public safety, and cleanliness have placed tremendous pressure on downtown businesses and property owners. Through these difficulties, the DSP and its management of the BID have remained a valuable and dependable resource for the downtown business community.

I strongly support a long-term renewal of the DSP management contract. The organization needs the stability and certainty necessary to retain qualified employees, develop meaningful long-term plans, and deliver the services that BID ratepayers expect. Short-term contract renewals create unnecessary uncertainty for an organization whose work requires continuity, experienced personnel, and long-term relationships.

I am equally concerned about the possibility of redirecting BID funds to support traditional City services, including City police operations. The BID was established to supplement municipal services, not replace the City's responsibility to fund them. Redirecting ratepayer assessments toward existing municipal obligations would undermine the original purpose of the BID and the understanding under which downtown property owners agreed to support it. **BID funds should remain dedicated to the enhanced services for which they were established and for which property owners continue to pay.**

One of the DSP's greatest strengths is its governance structure. Its board brings together business owners, property owners, and civic leadership with a shared interest in downtown Spokane's success. That collaborative approach provides meaningful accountability and ensures that the organization remains focused on the needs of the district and the ratepayers who support it.

For Kiemle Hagood, this issue is much more than a matter of public policy. We rely on the DSP and BID services to help provide a clean, safe, and welcoming environment for our employees, tenants, clients, and visitors. We want our employees to feel comfortable coming to work downtown, and we want our clients to remain confident in their downtown real estate investments.

The Downtown Spokane Partnership is one of the significant reasons Kiemle Hagood has remained committed to maintaining our corporate headquarters in

downtown Spokane. That is a meaningful statement from a company that has been part of this community for decades.

I strongly encourage the Mayor and City Council to renew the Downtown Spokane Partnership's BID management contract for a substantial, long-term period and to preserve BID funding for the enhanced services that downtown property owners established the district to provide.

Downtown Spokane continues to face significant challenges, and this is precisely the time to reinforce the partnership between the City and the business community, not weaken an organization that has served downtown so well.

Thank you for your consideration.

Gordon W. Hester
President & CEO
Kiemle Hagood
601 W. Main Ave., Suite #400
Spokane, WA 99201
P: 509.755.7565
Gordonh@kiemlehagood.com

KIEMLE HAGOOD

Real Estate Brokerage in Washington

From:	Bruya, Katy
To:	Mayor; City Council Members and Staff; City Council Testimony
Subject:	DSP/BID support
Date:	Monday, November 16, 2026 8:03:22 PM

[CAUTION - EXTERNAL EMAIL - Verify Sender]

I am writing today to ask that you:

1. **Renew DSP's contract with the stability needed to plan, retain staff and sustain services. They do important work that supports our downtown communities, both professional and personal ones (ie residents along with businesses). A one year extension isn't enough.**

2. **Adopt the ratepayer-supported 2027 BID budget** and protect its clean, safe and business-support programs.

3. **find another way to fund more police without stripping the budget out of the BID.**

Our downtown deserves the DSP and its great work. And these businesses and ratepayers deserve the respect of having their dollars go to the BID.

Thank you
Katy Bruya
Downtown employee

This electronic mail message and any attachments may contain confidential or privileged information and is intended for use solely by the above-referenced recipient. Any review, copying, printing, disclosure, distribution, or other use by any other person or entity is strictly prohibited under applicable law. If you are not the named recipient, or believe you have received this message in error, please immediately notify the sender by replying to this message and delete the copy you received.

From:	Rose Noble
To:	City Council Testimony; City Council Members and Staff; Mayor
Cc:	info@downtownspokane.org
Subject:	Support Downtown Spokane Partnership Contract Renewal and BID Priorities
Date:	Monday, November 16, 2026 2:53:14 PM
Attachments:	image002.png image003.png image004.png image005.png

---

[CAUTION - EXTERNAL EMAIL - Verify Sender]

Dear Mayor and City Council Members,

On behalf of Visit Spokane, I am writing in support of the continued partnership between the City of Spokane and the Downtown Spokane Partnership (DSP).

As Spokane's destination marketing organization, we see firsthand how the downtown experience influences meeting planners, event organizers, and prospective clients. A clean and safe downtown is important to our ability to compete for visitors, conventions, meetings, sporting events, and other business that brings people and economic activity to Spokane.

DSP has been a valued partner in that work. When Visit Spokane hosts prospective clients for site visits, DSP works with our team to help prepare downtown and ensure we are presenting Spokane well. That support matters when we are competing against other destinations and can help us win business for our community.

We recognize and respect the City Council's responsibility to evaluate the DSP contract and the BID. As Council considers the path forward, Visit Spokane supports maintaining the partnership and services that contribute to downtown and our ability to compete as a destination.

A strong downtown is important to Spokane's visitor economy, and we appreciate the City, DSP, and downtown stakeholders who contribute to its success.

Thank you,

50 YEARS OF IMPACT VISIT SPOKANE

Rose Noble, CDME
President & CEO
w. 509.742.9370
VisitSpokane.com
801 W Riverside Ste 100

From:	Geoff Asan
To:	Mayor; City Council Members and Staff; City Council Testimony; info@downtownspokane.org
Subject:	Downtown Spokane Partnership Letter of Support
Date:	Monday, November 16, 2026 1:07:08 PM
Attachments:	NCUlogo_18f3b34a-7ce8-48db-bbd0-6966874483e7.png DSP Support Letter - Asan Nov 2026.pdf

---

[CAUTION - EXTERNAL EMAIL - Verify Sender]

Mayor Brown and City Council Members,

Attached please my Letter of Support for the Downtown Spokane Partnership Contract Renewal and BID Priorities.

Please do not hesitate to reach out to me with any question, comments, and/or concerns.

I thank you in advance for your time and thoughtful consideration.

Geoff Asan
VP Commercial Banking Team Leader - Spokane
Numerica Credit Union
208.292.5564
Life moves. Live well.™

CONFIDENTIALITY NOTICE: This e-mail message including attachments, if any, is intended only for the person or entity to which it is addressed and may contain confidential and/or privileged material. Any unauthorized review, use, disclosure or distribution is prohibited if you are not the intended recipient, please contact the sender by e-mail and destroy all copies of the original message.

From:	Geoff Asan
To:	Mayor; City Council Members and Staff; City Council Testimony; infor@downtownspokane.org
Subject:	Downtown Spokane Partnership Letter of Support
Date:	Monday, November 16, 2026 11:35:24 AM
Attachments:	NCUlogo_18f3b34a-7ce8-48db-bbd0-6966874483e7.png DSP Support Letter - Asan Nov 2026.pdf

---

[CAUTION - EXTERNAL EMAIL - Verify Sender]

Mayor Brown and City Council Members,

Attached please my Letter of Support for the Downtown Spokane Partnership Contract Renewal and BID Priorities.

Please do not hesitate to reach out to me with any question, comments, and/or concerns.

I thank you in advance for your time and thoughtful consideration.

Geoff Asan
VP Commercial Banking Team Leader - Spokane
Numerica Credit Union
208.292.5564
Life moves. Live well.™

CONFIDENTIALITY NOTICE: This e-mail message including attachments, if any, is intended only for the person or entity to which it is addressed and may contain confidential and/or privileged material. Any unauthorized review, use, disclosure or distribution is prohibited if you are not the intended recipient, please contact the sender by e-mail and destroy all copies of the original message.

From:	Joe Owens
To:	Mayor; City Council Members and Staff
Cc:	City Council Testimony; info@downtownspokane.org
Subject:	Supporting Downtown Spokane | Davenport Hotels
Date:	Monday, November 16, 2026 10:39:55 AM
Attachments:	image.png image.png

[CAUTION - EXTERNAL EMAIL - Verify Sender]

Dear Mayor Brown and Spokane City Council,

As one of downtown Spokane's largest hospitality employers and a major destination for visitors, Davenport Hotels understands firsthand how closely our success is tied to the health and vitality of downtown Spokane. The Downtown Spokane Partnership (DSP) plays an important role in helping create an environment where businesses, residents, employees, and visitors can thrive.

DSP's impact can be seen every day through its Downtown Ambassadors, Clean Team, beautification efforts, support of local businesses, and promotion of downtown events. These services help improve the overall appearance, cleanliness, and activity level of downtown, all of which directly influence visitor perceptions and business performance.

At Davenport Hotels, thousands of guests visit downtown Spokane each year. Their experience extends beyond our hotels to local restaurants, shops, entertainment venues, and public spaces. A clean, safe, and welcoming downtown encourages guests to spend more time in the area, support local businesses, recommend Spokane to others, and return for future visits.

DSP provides measurable value by helping maintain cleaner streets, supporting economic activity, assisting visitors and businesses, and contributing to a more positive downtown environment. These efforts complement the City's work and help strengthen Spokane's reputation as a destination for tourism, conventions, business investment, and community events.

A successful downtown requires consistent investment and collaboration between public and private partners. DSP serves as a key partner in coordinating these efforts and delivering services that have a visible daily impact on downtown conditions.

Davenport Hotels values its partnership with DSP and strongly supports continued city investment in the organization. Maintaining these services helps support economic growth, visitor satisfaction, business retention, and the long-term success of downtown Spokane. Spokane's success depends on a vibrant downtown, and DSP remains an important contributor to that success

Sincerely,

DAVENPORT HOTELS

JOE OWENS
Hotel Manager | Davenport Hotels
111 S. Post Street, Spokane, WA 99201
O: 509.789.7820
www.davenporthotelcollection.com

Spokane's *Finest* Stays



From: Kyle McCarthy
To: Mayor; City Council Members and Staff; City Council Testimony; info@downtownspokane.org
Subject: Downtown Spokane Partnership (DSP)
Date: Monday, November 16, 2026 10:38:24 AM
Attachments: image001.png

[CAUTION - EXTERNAL EMAIL - Verify Sender]

Dear City Leaders

As one of downtown Spokane's largest hospitality employers and a destination welcoming thousands of visitors each year, Davenport Hotels sees firsthand the important role the Downtown Spokane Partnership (DSP) plays in our community and the vitality of our downtown.

From the daily presence of the Downtown Ambassadors and Clean Team to the beautification of our streets, support of local businesses, and promotion of downtown events, DSP's efforts make a meaningful and visible difference in the experience we provide our guests, our team members, and our community.

When visitors stay at our hotels, their experience extends far beyond our doors. They explore downtown restaurants, shop at local businesses, attend events, and walk our streets. The cleanliness, safety, vibrancy, and overall atmosphere of downtown Spokane directly influence their impression of our city, their willingness to return, and ultimately, Spokane's ability to attract future visitors, business, and investment.

We particularly value DSP's responsiveness, collaborative approach, and commitment to maintaining an inviting and thriving downtown environment. Their work complements the City's efforts and supports not only the hospitality industry, but also the many businesses, employees, residents, and visitors who contribute to Spokane's economic vitality.

A strong downtown does not happen without continued collaboration, investment, and a shared commitment to its success. DSP is an important partner in that effort, delivering tangible services and making a difference in the day-to-day experience of downtown Spokane.

Davenport Hotels deeply appreciates our partnership with DSP and strongly recognizes the value of its continued presence and services. We encourage the City to continue supporting DSP and its important work in keeping downtown Spokane clean, welcoming, vibrant, and economically strong.

Thank you for your leadership and continued commitment to downtown Spokane.

DAVENPORT HOTELS

Kyle McCarthy
Complex Director of Human Resources I Davenport Hotels
111 S. Post Street, Spokane, WA 99201
O: 509.789.6807
www.davenporthotelcollection.com

Spokane's *Finest* Stays



From:	Joshua Rockwell
To:	Mayor; City Council Members and Staff
Cc:	City Council Testimony; info@downtownspokane.org
Subject:	Supporting Downtown Spokane
Date:	Monday, November 16, 2026 10:01:08 AM
Attachments:	image001.png

[CAUTION - EXTERNAL EMAIL - Verify Sender]

Dear Mayor Brown and Spokane City Council,

As one of downtown Spokane's largest hospitality employers and a major destination for visitors, Davenport Hotels understands firsthand how much the success of our business is tied to the overall health and vitality of downtown Spokane. The Downtown Spokane Partnership (DSP) plays an important role in creating and maintaining the environment that makes downtown an attractive place to visit, work, live, and do business.

DSP's impact is evident in the everyday work being done throughout downtown. The Downtown Ambassadors and Clean Team, ongoing street beautification, support of local businesses, and promotion of downtown events all contribute to a better downtown experience. These efforts are not simply cosmetic; they have a direct and measurable influence on how people experience our city.

Our guests' experience does not begin and end at the doors of our hotels. They venture into the community to dine at local restaurants, visit shops, attend events, and explore downtown. What they encounter along the way matters. The cleanliness, safety, activity, and overall appearance of downtown Spokane shape their perception of our city, influence whether they choose to return, and play a role in Spokane's ability to attract additional visitors, business opportunities, and investment.

We recognize and appreciate DSP's hands-on approach, responsiveness, and willingness to work collaboratively with businesses and community partners. Its efforts provide an important layer of support that complements the City's work and benefits far more than the hospitality industry alone. Downtown businesses, their employees, residents, and visitors all have a stake in maintaining a clean, safe, active, and welcoming environment.

A successful downtown requires more than individual businesses doing their part. It takes consistent investment, coordination, and a shared commitment from both public and private partners. DSP helps bring those efforts together and provides services that have a real, day-to-day impact on the condition and perception of downtown Spokane.

Davenport Hotels values its relationship with DSP and firmly believes the organization provides an important service to our community. Continued support from the city is essential to sustaining the progress being made and ensuring these services remain in place. We strongly encourage the city to maintain its support of DSP and recognize the significant role it plays in keeping downtown Spokane clean, safe, welcoming, vibrant, and economically competitive.

Downtown Spokane's success benefits all of us, and DSP remains an important part of making that success possible.

Thank you,

DAVENPORT HOTELS

JOSHUA ROCKWELL
Complex Hotel Manager | Davenport Hotels
333 W Spokane Falls Blvd, Spokane, WA 99201
O: 509.589.4302
www.davenporthotelcollection.com

"When you realize each day is not one more to spend, but one less to live, you begin to value what truly matters."



Confidentiality Notice: This e-mail message, including any attachments, may contain confidential information intended solely for the use of intended recipient(s). If you are not the intended recipient(s), you are hereby notified that any dissemination, distribution, or copying of this e-mail message is strictly prohibited. If you have received this message in error, please immediately notify the sender and delete this e-mail message from your computer and all copies and backups thereof.

From:	Danielle Beaudine
To:	Mayor; City Council Members and Staff; City Council Testimony; info@downtownspokane.org
Subject:	Endorsement of the Downtown Spokane Partnership's Continued Leadership and Management of the Downtown Business Improvement District (BID)
Date:	Monday, November 16, 2026 9:13:25 AM
Attachments:	image.png image.png

[CAUTION - EXTERNAL EMAIL - Verify Sender]

Hi Mayor and Spokane City Council,

As one of downtown Spokane's largest hospitality employers and a destination welcoming thousands of visitors each year, Davenport Hotels sees firsthand the important role the Downtown Spokane Partnership (DSP) plays in our community and the vitality of our downtown.

From the daily presence of the Downtown Ambassadors and Clean Team to the beautification of our streets, support of local businesses, and promotion of downtown events, DSP's efforts make a meaningful and visible difference in the experience we provide our guests, our team members, and our community.

When visitors stay at our hotels, their experience extends far beyond our doors. They explore downtown restaurants, shop at local businesses, attend events, and walk our streets. The cleanliness, safety, vibrancy, and overall atmosphere of downtown Spokane directly influence their impression of our city, their willingness to return, and ultimately, Spokane's ability to attract future visitors, business, and investment.

We particularly value DSP's responsiveness, collaborative approach, and commitment to maintaining an inviting and thriving downtown environment. Their work complements the City's efforts and supports not only the hospitality industry, but also the many businesses, employees, residents, and visitors who contribute to Spokane's economic vitality.

A strong downtown does not happen without continued collaboration, investment, and a shared commitment to its success. DSP is an important partner in that effort, delivering tangible services and making a difference in the day-to-day experience of downtown Spokane.

Davenport Hotels deeply appreciates our partnership with DSP and strongly recognizes the value of its continued presence and services. We encourage the City to continue supporting DSP and its important work in keeping downtown Spokane clean, welcoming, vibrant, and economically strong.

Thank you for your leadership and continued commitment to downtown Spokane.

Best,
Danielle

DAVENPORT HOTELS

DANIELLE BEAUDINE
Senior Director of Marketing, Davenport Hotels
111 S. Post Street, Spokane, WA 99201
C: 509.995.0696
www.davenporthotelcollection.com



From: Chris Batten
To: City Council Members and Staff
Cc: City Council Testimony; Mayor
Subject: Support for a Long-Term DSP Contract to Manage the Downtown BID
Date: Saturday, November 14, 2026 9:35:28 PM

[CAUTION - EXTERNAL EMAIL - Verify Sender]

Dear Council President and Members of the Spokane City Council,

I am writing to urge you to approve a new, long-term contract with the Downtown Spokane Partnership (DSP) to continue managing the Downtown Business Improvement District (BID).

The DSP has been the champion downtown has needed for the past 30 years. It was formed at a time when downtown desperately needed it, and it is needed now more than at any time since. Throughout that time, it has managed the BID on behalf of the ratepayers who fund it.

The DSP's clean and safe programs give downtown consistency and continuity of service. Ambassadors and the Clean Team are on the street seven days a week, 362 days a year, removing graffiti, clearing snow, and maintaining sidewalks and green spaces. That steady presence has made the DSP the glue that holds downtown together. It also leads the holiday and seasonal events that draw families downtown and advocates for the investment downtown needs to thrive.

That stability matters more now than ever. Downtown is fragile, with vacancy rates at historic highs. This is not the time to introduce uncertainty into the services that keep our streets clean, safe and welcoming. A one-year extension makes it difficult for the DSP to plan, retain staff and negotiate cost-effective service agreements. Multi-year terms have served the City and ratepayers well for decades, and a long-term agreement would continue that track record.

RenCorp Realty and our partners own and manage multiple properties within the BID, including affordable, workforce housing. Our commercial tenants are small business owners, including salons, restaurants and coffee shops, whose livelihoods depend on customers who feel safe and welcome walking downtown. They have come to trust and rely on the services the DSP provides, and they see the difference those services make every day. The DSP has been a good steward of ratepayer assessments.

I am also deeply concerned about the proposal to redirect BID assessments to fund police services. BID assessments have always been intended to supplement City services, not to replace City funding. While we absolutely support dedicated foot and bike patrols downtown, they should not come at the cost of the ratepayers. Over the years, the City has diminished its commitment to downtown, and the BID has been there to fill in the gaps. Removing $250,000 from the BID would place a substantial strain on downtown at the very moment it needs additional resources from the City, not fewer. Rather than taking money from the BID, these patrols should be fully funded by the two public safety taxes passed over the past two years.

There is also no assurance that officers funded with BID assessments will not be pulled to support other areas of the city as needed, nor any assurance that the City's current level of service downtown will not be diminished, resulting in a net loss of services. Before any assessments are redirected, the City should commission a baseline level-of-service study to determine what the City is responsible for providing downtown, so that the supplemental

services paid for by ratepayers remain truly supplemental.

Spokane has a world-class downtown. It belongs to all of Spokane, and it should be the jewel of our community and treated as such. Keeping downtown active and vibrant takes sustained investment and a committed partner, and the DSP has been that partner.

I respectfully ask the Council to approve a long-term contract with the DSP and to keep BID assessments dedicated to the clean and safe services that downtown depends on.

Thank you for your time and your service to our city.

Sincerely,

Christopher M. Batten, CCIM
Designated Broker
827 W. 2nd
Spokane, WA 99201
509-315-2998
C-509-217-5508
chris@rencorprealty.com

Please review the Washington & Idaho State Law of Real Estate Agency pamphlets, to assist in the awareness of your rights in relationships with real estate brokers by clicking on the following links:
http://app.leg.wa.gov/RCW/default.aspx?cite=18.86.120&pdf=true

From:	Maija Brown
To:	Mayor; City Council Members and Staff; City Council Testimony; info@downtownspokane.org
Subject:	Public Testimony Nov 17 Budget Meeting
Date:	Friday, November 13, 2026 8:50:32 PM

[CAUTION - EXTERNAL EMAIL - Verify Sender]

Dear Mayor Brown and Members of the Spokane City Council,

As a patron of several downtown businesses, I am writing ahead of the November 17 budget meeting to express deep concern over the unilateral shift to a one-year contract extension for the Downtown Spokane Partnership (DSP) and the diversion of $250,000 away from our Clean and Safe programs.

For more than 30 years, the partnership between the City, the DSP, and downtown ratepayers has functioned because of mutual accountability and adherence to the law. Under Spokane Municipal Code (SMC) 04.31.060 and RCW 35.87A, BID assessments are self-imposed funds paid by downtown business and property owners specifically to provide enhanced services—not to subsidize general City responsibilities or be reallocated without ratepayer consent. Furthermore, SMC 04.31.070 and 04.31.080 establish that the Ratepayer Advisory Board is responsible for developing the BID budget and advising the City on how ratepayer dollars are invested. Making major financial reallocations and altering longstanding five-year contract norms without consulting the BID board directly undermines the trust and legal framework that keep downtown businesses invested in Spokane's urban core.

As you finalize the budget on November 17, I urge you to:

* Restore the $250,000 to Clean and Safe Operations: Keep BID assessment dollars strictly dedicated to the ratepayer-approved programs they were collected to fund.
* Adopt the Ratepayer Advisory Board's Recommended 2027 Budget: Respect the statutory role of the Advisory Board and keep ratepayers at the center of decisions regarding their own assessments.
* Restore a Standard Multi-Year Contract with the DSP: Replace the disruptive one-year extension with a traditional five-year agreement to ensure stability, continuity, and accountability for downtown safety and economic vitality.

Downtown businesses rely on a predictable, well-managed environment to survive and grow. Please honor the intent of the BID, respect ratepayer governance, and use existing municipal public safety funds—not dedicated BID dollars—to bolster core City services.

Thank you for your time and consideration.

Sincerely,
Maija Brown

Sent from Yahoo Mail for iPhone

From: Jessica - Sweet Frostings
Subject: DSP contract
Date: Thursday, November 12, 2026 7:23:23 PM

[CAUTION - EXTERNAL EMAIL - Verify Sender]

Hello,

I am writing to express my strong support for renewing the City's contract with the Downtown Spokane Partnership (DSP) under a long-term, five-year agreement, consistent with the partnerships that have historically supported the management and success of downtown Spokane.

As a downtown business owner and a member of the BID Board, I have a personal and professional investment in the success of our downtown core. I believe strongly in what DSP does, the services it provides, and the role it plays in keeping downtown Spokane clean, safe, vibrant, and economically viable. After more than 30 years of partnership, I find it incredibly frustrating that we are questioning the stability of this relationship and potentially disrupting a proven management structure.

Respectfully, I feel this situation is being mishandled.

I understand the concerns being raised about the procurement process and the City's responsibility to follow its contracting procedures. Transparency, accountability, and responsible use of public resources are important. I also think we need to step back and ask a more important question: What problem are we actually trying to solve, and how does putting this contract out to bid benefit downtown Spokane, its businesses, property owners, and ratepayers?

The fact that a contract was not previously competitively bid does not, in itself, mean the existing partnership is ineffective or that replacing it will produce a better outcome. DSP has more than three decades of institutional knowledge, established relationships, operational infrastructure, and a demonstrated history of delivering services to downtown. That experience has value, and I believe it should be considered as part of any responsible decision-making process.

If there are performance concerns, financial concerns, or specific deficiencies with the current arrangement, those should be clearly identified and addressed. Creating uncertainty around an organization that has successfully managed downtown services for decades, without clearly articulating the benefit of doing so is unnecessarily disruptive and harmful to the businesses in the downtown core.

A potential one-year extension while the City works through a competitive procurement process does not provide the stability necessary to effectively manage and invest in downtown. Long-term planning, staffing, service agreements, and responsible budgeting all require predictability. I struggle to understand how putting DSP in a holding pattern benefits anyone, particularly the ratepayers who are funding these services. A five-year agreement provides stability, accountability, and an opportunity to establish measurable expectations and shared goals.

I am equally concerned about the proposal to redirect $250,000 annually in BID assessment revenue toward staffing the downtown police precinct in 2027 and 2028.

Let me be clear: I absolutely support increased police presence and improved public safety downtown. It is essential to the health of our businesses, the confidence of our visitors, and the quality of life for those who live and work here. However, there is an important distinction between the City's responsibility to provide core municipal services and the supplemental services that property and business owners voluntarily fund through the BID.

The BID was established because downtown property and business owners chose to invest additional money into their community to improve its economic health. Those assessments are not simply another pool of money for the City to redirect when budget priorities become difficult. They are investments made by ratepayers with a specific purpose and expectation.

I appreciate the Councilmember's clarification that BID expenditures must go through a public approval process and that the Ratepayer Advisory Board will have an opportunity to make recommendations. However, transparency in the approval process does not automatically make every proposed expenditure the right one.

Just because an expenditure may be legally permissible does not necessarily mean it is the most appropriate or responsible use of ratepayer money.

Spokane voters have already approved dedicated public safety tax increases, including the additional 0.1% public safety tax passed in October 2026. It is difficult to understand why BID ratepayers should now be asked to shoulder additional costs for what is fundamentally a municipal responsibility, particularly when dedicated public safety revenue has been approved to address police staffing.

As a taxpayer, ratepayer, and business owner, I believe it is the City's responsibility to manage its budgets, prioritize its resources, and make difficult financial decisions without continually shifting the burden onto the people and businesses it is supposed to serve. Asking downtown property and business owners to fund services that should be covered by municipal resources does not solve the underlying budget problem. It simply moves the financial burden elsewhere.

I am a baker at heart, not a politician. I believe in hard work, practical solutions, accountability, and making the resources you have work before asking people to contribute more. What I see happening here feels unnecessarily political, inefficient, and counterproductive. Rather than strengthening a partnership that has served downtown for more than three decades, these decisions risk undermining it and creating additional financial pressure on the very businesses and property owners who are already investing in Spokane's future.

Downtown businesses are working hard to survive, grow, employ people, attract customers, and contribute to the tax base. We need a City government that recognizes us as partners in that effort, not as an additional revenue source to lean on when its own budget becomes difficult to manage.

I also believe there is a larger issue here that deserves consideration: the people funding the BID should have confidence that their assessments are being used to provide enhanced services and improvements that directly benefit their businesses and properties. The RAB's

recommendations should carry meaningful weight in the City's decisions, not simply become another procedural step before decisions are made.

I want to see Spokane succeed. I want to see downtown thrive. I want businesses to feel confident investing here, and I want our property owners and ratepayers to feel that their contributions are being respected and used appropriately.

The DSP has been a longstanding partner in making that possible. I believe disrupting that partnership, creating uncertainty around its future, or diverting the resources that make its work possible is a step in the wrong direction.

I respectfully urge the Mayor and City Council to:

1. Renew the City's contract with DSP under a five-year agreement that provides the stability necessary for effective long-term planning and service delivery.
2. If the City believes a competitive procurement process is necessary, clearly identify the problem it is intended to solve and demonstrate how it will benefit downtown and its ratepayers.
3. Keep BID assessment revenue dedicated to the supplemental services and improvements for which it was intended, with meaningful consideration given to the recommendations of the RAB.
4. Utilize the City's dedicated public safety funding to address police staffing and coverage downtown rather than shifting that financial responsibility onto BID ratepayers.
5. Prioritize transparency, fiscal accountability, and meaningful collaboration with the property and business owners who directly fund the BID.

Please remember that behind every assessment, budget decision, and policy discussion are real people and businesses who are working hard to make this city better. We deserve thoughtful leadership, responsible financial management, and decisions that benefit the community as a whole.

I am not opposed to accountability, transparency, or responsible procurement. I am opposed to creating unnecessary disruption, shifting financial responsibilities, and making decisions without clearly demonstrating how they benefit the people who ultimately pay for them.

I strongly encourage you to renew the DSP contract for five years and protect the integrity of the BID and the investments made by its ratepayers.

Respectfully,

Jessica
Downtown Business Owner of 15 years
BID Board Member

--

Jess Atkinson
Jess@SweetFrostingsBakeshop.com
www.SweetFrostingsBakeshop.com

W: 509-242-3845
C: 509-385-9495
Sweet Frostings Blissful Bakeshop

From:	Jon Erickson
To:	Mayor; City Council Members and Staff; City Council Testimony; info@downtownspokane.org
Subject:	DSP and BID Support
Date:	Wednesday, November 11, 2026 12:22:46 PM
Attachments:	image001.png

[CAUTION - EXTERNAL EMAIL - Verify Sender]

Dear Mayor Brown and Members of the Spokane City Council,

I am writing to express my strong support for the renewal of the Downtown Spokane Partnership's contract and the continuation of the BID funding.

As the hospitality and sales leader representing Davenport Hotels, I have the opportunity to promote Spokane to meeting planners, corporate decisionmakers, convention organizers, and visitors from across the country. Every day, our team works to convince these customers that Spokane is the right destination for their next meeting, event, or visit.

While our hotels and meeting facilities are certainly important to that decision, we are not simply selling hotel rooms or convention space. We are selling Spokane.
The experience our guests have beyond the walls of our hotels plays a significant role in their decision to choose our city, return for future events, and recommend Spokane to others. A clean, safe, attractive, and vibrant downtown is not simply a community amenity; it is an essential component of our ability to compete for business against other destinations.

The Downtown Spokane Partnership is an important partner in that effort.

Through its commitment to downtown beautification, cleanliness, business vitality, programming, and the overall visitor experience, DSP helps create an environment that strengthens our sales efforts. When we bring prospective clients to Spokane for site visits, the condition and energy of our downtown contribute directly to the impression they take home. That impression can ultimately influence whether Spokane wins or loses a piece of business.

And when Spokane wins that business, the economic benefits extend well beyond our hotels. Convention attendees and visitors spend money in our restaurants, retail establishments, entertainment venues, and other local businesses. These expenditures support jobs, generate tax revenue, and contribute to the overall economic health of our community.

Investing in DSP is investing in Spokane's ability to attract business and generate economic activity.

I respectfully encourage the Mayor and City Council to renew DSP's contract and maintain the BID funding at LEAST at current levels, ensuring the organization has the resources necessary to continue this important work.

A strong downtown creates a stronger Spokane. And a stronger Spokane is a destination we can more successfully sell to the world.

Thank you for your leadership, consideration, and continued commitment to the economic future of our city.

Let’s Go Spo!

DAVENPORT HOTELS

JON ERICKSON
Area Director of Sales & Marketing I Davenport Hotels
111 S. Post Street, Spokane, WA 99201
D: 509.789.6810 C: 954.557.5800
www.davenporthotelcollection.com



Agenda Sheet for City Council: **Committee:** Urban Experience **Date:** 10/15/2026 **Committee Agenda type:** Discussion		**Date Rec'd**	10/7/2026
		Clerk's File #	ORD C36976
		Cross Ref #	
Council Meeting Date: 12/02/2026		**Project #**	
Submitting Dept	PLANNING SERVICES	**Bid #**	
Contact Name/Phone	AMANDA BECK X6414	**Requisition #**	
Contact E-Mail	ABECK@SPOKANECITY.ORG		
Agenda Item Type	Hearings		
Council Sponsor(s)	ZZAPPONE PDILLON		
Sponsoring at Administrators Request	NO		
Lease? NO	**Grant Related?** NO	**Public Works?** NO	
Agenda Item Name	ORDINANCE CONFIRMING AND APPROVING THE EAST SPRAGUE PBIA 2027		

Agenda Wording

An Ordinance approving and confirming the 2027 Assessments and Assessment Roll for the East Sprague Parking and Business Improvement Area.

Summary (Background)

The East Sprague Parking and Business Improvement Area, also known as the East Sprague Business Improvement District (ESBID), collects an annual special assessment from property owners within the district to provide funding for programs and services, as outlined in Chapter 04.31C SMC. The East Sprague Business Association (ESBA) administers and operates these programs through a contract with the City of Spokane, on behalf of the East Sprague Ratepayer Advisory Board. An annual management plan and budget outline the proposed programs, services, and expenditures recommended in administration of the BID as modeled on the projected 2027 Assessment. Acting as a board of equalization for the purpose of considering objections or comments made concerning the assessment roll, City Council may correct, revise, raise, lower, change or modify the assessment, assessment roll, management plan, and or the proposed budget. Per the annual assessment process set forth in Chapter 04.31C SMC: • City Council set the assessment roll hearing date by resolution; • The draft Assessment Roll will be made available for public viewing through the City Clerk's Office on November 2, 2026; • A mailed notice to property owners identified on the assessment roll will be mailed fifteen days prior to the public hearing to vote on the assessment roll; • City Council will hold a public hearing on December 2, 2026, and then vote on the 2027 assessment and assessment roll; • At the public hearing City Council will also vote on the proposed 2026 management plan and budget for the services to be provided by ESBA on behalf of the ratepayers; and • Assessments are due January 31, 2027 (if paid in half the remainer is due July 31, 2027).

What impacts would the proposal have on historically excluded communities?

Administration and management of the East Sprague PBIA is conducted by the BID Manager, the East Spokane Business Association (ESBA). ESBA is tasked with assisting existing and potential businesses that want to be located with the PBIA, and this can include women and minority owned businesses that benefit from an entity that can manage district-wide marketing and events to attract customers that support local Spokane businesses.

How will data be collected, analyzed, and reported concerning the effect of the program/policy by racial, ethnic, gender identity, national origin, income level, disability, sexual orientation, or other existing disparities?

The BID Manager completes an annual management plan as part of the annual special assessment process, which includes information on how the BID serves ratepayers. No specific information is broken down by racial, gender identity, or other metrics at this time. Feedback from ratepayers to the East Sprague Ratepayer Advisory Board is one avenue through which both the City and ESBA know if ratepayers believe they are receiving services commensurate with the collected special assessment.

How will data be collected regarding the effectiveness of this program, policy, or product to ensure it is the right solution?

Effectiveness of the proposed changes would be collected annually during the special assessment process, and as analyzed in the annual management plan ESBA completes as the BID manager. The ability to maintain, or expand, services as funded through the special assessments would be a positive indicator that the BID is self-sufficient. The BID also works with StartUp Spokane to collect Placer.ai data on foot traffic for events and promotion of the district.

Describe how this proposal aligns with current City Policies, including the Comprehensive Plan, Sustainability Action Plan, Capital Improvement Program, Neighborhood Master Plans, Council Resolutions, and others?

The creation and continuation of the East Sprague PBIA achieves a large goal from the 2014 East Sprague Targeted Investment Pilot (TIP) Advisory Board's Implementation Plan, in alignment with the recommendations from the Smart Growth America technical assistance grant report on how to achieve an economically vibrant neighborhood through targeted public and private investments. This resolution of intent to expand the PBIA boundaries is in response to community input to expand the existing boundary westward. Adding more assessment generating properties without, with minimal increases to service demands, supports economic development focused specifically on the East Sprague area. This is in alignment with the vision and

Council Subcommittee Review

Fiscal Impact

Approved in Current Year Budget?	N/A
Total Cost	$
Current Year Cost	$
Subsequent Year(s) Cost	$

Narrative

The East Sprague PBIA is meant to be self-funding through the collection of the special assessments. This expansion should not materially add to city staffing needs.

Amount		Budget Account
Select	$	#
Select	$	#
Select	$	#
Select	$	#
Select	$	#
Select	$	#

Funding Source	Recurring
Funding Source Type	Program Revenue

Is this funding source sustainable for future years, months, etc?

A PBIA is set up to fund specific services for its geographic area above and beyond the baseline services provided by the City.

Expense Occurrence	N/A

Other budget impacts (revenue generating, match requirements, etc.)

Approvals		Additional Approvals	
Dept Head	GARDNER, SPENCER		
Division Director	MACDONALD, STEVEN		
Accounting Manager	ZOLLINGER, NICHOLAS		
Legal	DUGGAN, ANDI		
For the Mayor	PICCOLO, MIKE		

Distribution List

LaVerne Biel; laverne.esba@gmail.com	Chris Venne; ctvenne@comcast.net
amcdaniel@spokanecity.org	sgardner@spokanecity.org
smacdonald@spokanecity.org	eking@spokanecity.org

ORDINANCE NO. C36976

An Ordinance approving and confirming the 2027 Assessments and Assessment Roll for the East Sprague Parking and Business Improvement Area, prepared under Ordinance C35377 as codified and amended in Chapter 04.31C SMC, and setting an effective date.

WHEREAS, on November 11, 2026, the Spokane City Council passed Resolution 2026–00## which provided notice and set a date for hearing on the assessments to be levied under the above identified ordinance; and

WHEREAS, pursuant to Resolution 2026–00##, a public hearing was held on December 2, 2026 to take public testimony regarding the assessments and assessment roll, and the management plan and budget for the East Sprague Parking and Business Improvement Area (PBIA); and

WHEREAS, the assessment roles have been on file in the Office of the City Clerk for public review and inspection; and

WHEREAS, the City Council, through this ordinance, intends to levy assessments in the East Sprague PBIA to provide programs and services that will specifically benefit the properties and businesses in the PBIA.

NOW, THEREFORE, the Spokane City Council does ordain:

Section 1. Assessment Formula. The method of assessment is based upon the Assessment Formula outlined in SMC 04.31C.040, including benefit zones and assessment classifications, and is calculated for the 2027 Assessment in Appendix A.

Section 2. Specially Benefitted Properties. Each of the businesses, multifamily residential, and mixed-use buildings, as described in RCW 35.87A.020, shown upon said Roll are hereby declared to be specially benefited by the programs authorized in Ordinance C35377, in at least the amount levied against the same.

Section 3. 2027 Assessments and Assessment Roll. The 2027 Assessments and Assessment Roll of the East Sprague Parking and Business Improvement Area are hereby approved and confirmed, as included in Appendix A.

Section 4. Certification and Transmittal of Assessment Roll. The City Clerk is hereby directed to certify and transmit the assessment roll to the City Treasurer for collection pursuant to Spokane Municipal Code and state law.

Section 5. Payment of 2027 Assessments. The assessments for businesses, multifamily residential, and mixed-use buildings shown in the Assessment Roll are due on January 31, 2027. The ratepayer may elect to make payments in two installments with the first half of the assessment due and payable on January 31, 2027, and the second half of the assessment due and payable on July 31, 2027. Prior to the due date, the ratepayers shall be sent a bill stating the amount of the assessment due and payable.

Section 6. Disputes of Assessment. Within sixty (60) days of the approval of the 2027 Assessment, assessment roll, and the management plan and budget, any ratepayer aggrieved by the amount of an assessment shall request a meeting and/or hearing before the East Sprague PBIA Ratepayer Advisory Board. If not satisfied with the decision of the Ratepayer Advisory Board, the ratepayer must appeal the decision within ten (10) days from the date of the decision to the City's Hearing Examiner, in the manner provided for in the City's Municipal Code. Failure to request a hearing shall result in a waiver of the right to challenge the assessment.

Section 7. This ordinance, being one to implement the East Sprague Parking and Business Improvement Area and confirming assessments therefor, shall take effect and be in full force from and after the date of its passage pursuant to Section 19.A of the Spokane City Charter.

PASSED by the City Council on _____, 2026.

_____
Council President

Attest:

_____
City Clerk

Approved as to form:

_____
Assistant City Attorney

_____
Mayor

_____
Date

_____
Effective Date

APPENDIX A – 2027 East Sprague PBIA

EAST SPRAGUE PARKING AND BUSINESS IMPROVEMENT AREA
2027 Assessment Formula

	Land Square Footage (LSF) Assessment Rate			**Taxable Assessed Value (TAV) Assessment Rate**
	75%			**25%**
Benefit Zone	Per LSF	Minimum	Maximum	Per $1,000 TAV
Zone 1 Center and Corridor	3.4 cents	$365.68	$1,755.28	60 cents
Zone 2 General Commercial	1.7 cents	$182.84	$877.64	30 cents
Zone 3 Industrial	0.8 cents	$95.07	$438.76	15 cents

2027 represents the twelfth assessment year for the East Sprague BID since 2016. Per Section 04.31C.040(C)(3) of the Spokane Municipal Code, for subsequent years the assessment will continue on a three-year cycle and follow the inflationary change provided in SMC 04.31C.040(C)(2). The twelfth year represents the third year of a three-year cycle.

Per SMC 04.31C.040(C)(2)(c), to account for inflation and maintain the equivalent buying power, the assessment rate on LSF will be increased by an Inflationary Factor. For 2027, the assessments will equal the “sixth year” multiplied by a CPI factor that is the lesser of six (6) percent or the percentage change in CPI for All Urban Consumers (CPI-U) West Region between June 2024 and June 2026. The TAV rate will remain the same.

In 2022, City Council approved Ordinance C36255 to ensure that the annual assessment stays apace with inflation, which amended the assessment formula such that the minimum and maximum LSF amounts are adjusted annually in the same percentage and manner as determined by the Inflationary Factor.

The CPI for All Urban Consumers (CPI-U): West Region between June 2024 and June 2026 was 5.9 percent. Therefore, 2027 assessments were increased by 5.9 percent for the 2027 assessment year. The minimum and maximum LSF amounts were increased by the 5.9 percent inflationary factor as well.

Agenda Sheet for City Council: **Committee:** Public Safety **Date:** 11/05/2026 **Committee Agenda type:** Discussion		**Date Rec'd**	10/29/2026
		Clerk's File #	OPR 2025-0392
		Cross Ref #	
Council Meeting Date: 11/18/2026		**Project #**	
Submitting Dept	MAYOR	**Bid #**	
Contact Name/Phone	MAGGIE YATES 6779	**Requisition #**	
Contact E-Mail	MYATES@SPOKANECITY.ORG		
Agenda Item Type	Contract Item		
Council Sponsor(s)	KTELIS		
Sponsoring at Administrators Request	YES		
Lease? NO	**Grant Related?** NO	**Public Works?** NO	
Agenda Item Name	INTERLOCAL AGREEMENT AMENDMENT WITH SPOKANE COUNTY FOR STARS		

Agenda Wording

Interlocal Agreement amendment to OPR 2025-0392 (Spokane County No. 25ASO2968) extending the agreement for an additional one-year term.

Summary (Background)

The purpose of this amendment is to extend the interlocal agreement approved through OPR 2025-0392 for the coordination and administration of Opioid funds from City to the County for the expansion of treatment services for an additional one-year term. This extended Agreement shall automatically be renewed for one-year terms for each succeeding year unless terminated consistent with Section 5 of the Agreement or upon exhaustion of all City funds provided to County

What impacts would the proposal have on historically excluded communities?

See information provided in original OPR 2025-0392.

How will data be collected, analyzed, and reported concerning the effect of the program/policy by racial, ethnic, gender identity, national origin, income level, disability, sexual orientation, or other existing disparities?

See information provided in original OPR 2025-0392

How will data be collected regarding the effectiveness of this program, policy, or product to ensure it is the right solution?

See information provided in original OPR 2025-0392

Describe how this proposal aligns with current City Policies, including the Comprehensive Plan, Sustainability Action Plan, Capital Improvement Program, Neighborhood Master Plans, Council Resolutions, and others?

OPR 2025-0392

Council Subcommittee Review

Fiscal Impact	
Approved in Current Year Budget?	N/A
Total Cost	**$**
Current Year Cost	**$**
Subsequent Year(s) Cost	**$**

Narrative

Amount		**Budget Account**
Select	**$**	**#**
Select	**$**	**#**
Select	**$**	**#**
Select	**$**	**#**
Select	**$**	**#**
Select	**$**	**#**

Funding Source	N/A
Funding Source Type	Select

Is this funding source sustainable for future years, months, etc?

Expense Occurrence	N/A

Other budget impacts (revenue generating, match requirements, etc.)

Approvals		**Additional Approvals**	
Dept Head	MCDANIEL, ADAM		
Division Director			
Accounting Manager	DANIELS, DERREK		
Legal	FAIRBORN, KATHERINE		
For the Mayor	PICCOLO, MIKE		

Distribution List	

OPR 2025-0392

AMENDMENT NO. 1 TO INTERLOCAL AGREEMENT NO. 25ASO2968

This Amendment No. 1 Interlocal Agreement No. 25ASO2968 constitutes the written agreement of Spokane County (County) and the City of Spokane (City) entered between the Parties as authorized in Agreement No. 25ASO2968 Sections 4B.

Consistent with the terms of Agreement No. 25ASO2968 Section 4B, County has not spent all Opioid funds from City upon expiration of the Agreement. Instead of returning funds, the Parties agree, in writing, to extend the Agreement so that County may retain and distribute funds received from City consistent with the terms and intent in the original Agreement. To that end, this Agreement shall be extended by mutual agreement of the Parties as of June 30, 2026 for additional one year term. This extended Agreement shall automatically be renewed for one-year terms for each succeeding year unless terminated consistent with Section 5 of the Agreement or upon exhaustion of all City funds provided to County. No additional funds will be provided by the City under this Agreement.

This Amendment shall be effective once signed by both parties

SPOKANE COUNTY	**CITY OF SPOKANE**
By_____	By_____
Signature Date	Signature Date
Jeff McMorris, Acting CEO_____	_____
Type or Print Name	Type or Print Name
Acting CEO_____	_____
Title	Title
Attest:	Approved as to form:
_____	_____
City Clerk	Assistant City Attorney

Docusign Envelope ID: 30FC8988-8F6B-4C50-80A4-86460AE4D591

Agenda Sheet for City Council:

Committee: Urban Experience **Date:** 05/12/2025

Committee Agenda type: Discussion

Council Meeting Date: 06/02/2025

Date Rec'd	5/8/2025		
Clerk's File #	OPR 2025-0392		
Cross Ref #			
Project #			
Submitting Dept	MAYOR	**Bid #**	
Contact Name/Phone	MAGGIE YATES 6753	**Requisition #**	
Contact E-Mail	MYATES@SPOKANECITY.ORG		
Agenda Item Type	Contract Item		
Council Sponsor(s)	ZZAPPONE		
Sponsoring at Administrators Request	NO		
Lease? NO	**Grant Related?** NO	**Public Works?** NO	
Agenda Item Name	SPOKANE CITY-COUNTY INTERLOCAL AGREEMENT FOR STARS/STAT		

Agenda Wording

The purpose of this Agreement is to provide an instrument for the coordination and administration of Opioid funds from City to the County for the expansion of treatment services.

Summary (Background)

An interlocal agreement between the City of Spokane and Spokane County as joint members of the Spokane County Opioid Abatement Council for investment in existing and ongoing programs within the community with the goal of expanding access to more immediate treatment services for individuals impacted by Opioid crisis within Spokane County. Services include expansion of Sobering, Triage & Transition (STaT) services through Spokane Treatment and Recovery Services (STARS), which includes additional capacity of up to twelve (12) STaT slots. The County agrees to use the funds from the City to expand, enhance, and improve these services.

Approved by Spokane City Council
on: 6/2/2025

City Clerk

Docusign Envelope ID: 30FC8988-8F6B-4C50-80A4-86460AE4D591

What impacts would the proposal have on historically excluded communities?

N/A

How will data be collected, analyzed, and reported concerning the effect of the program/policy by racial, ethnic, gender identity, national origin, income level, disability, sexual orientation, or other existing disparities?

N/A

How will data be collected regarding the effectiveness of this program, policy, or product to ensure it is the right solution?

N/A

Describe how this proposal aligns with current City Policies, including the Comprehensive Plan, Sustainability Action Plan, Capital Improvement Program, Neighborhood Master Plans, Council Resolutions, and others?

N/A

Council Subcommittee Review

Docusign Envelope ID: 30FC8988-8F6B-4C50-80A4-86460AE4D591

Fiscal Impact	
Approved in Current Year Budget?	N/A
Total Cost	**$**
Current Year Cost	**$**
Subsequent Year(s) Cost	**$**

Narrative

Amount		**Budget Account**
Select	**$**	**#**
Select	**$**	**#**
Select	**$**	**#**
Select	**$**	**#**
Select	**$**	**#**
Select	**$**	**#**

Funding Source	N/A
Funding Source Type	Select

Is this funding source sustainable for future years, months, etc?

Expense Occurrence	N/A

Other budget impacts (revenue generating, match requirements, etc.)

Approvals		**Additional Approvals**	
Dept Head	SCOTT, ALEXANDER		
Division Director	GBYRD		
Accounting Manager	GBYRD		
Legal	GBYRD		
For the Mayor	GBYRD		

Distribution List	
	myates@spokanecity.org

NO. 25-0283

BEFORE THE BOARD OF COUNTY COMMISSIONERS
OF SPOKANE COUNTY, WASHINGTON

IN THE MATTER OF EXECUTING AN INTERLOCAL AGREEMENT, 25ASO2968, WITH THE CITY OF SPOKANE FOR EXPANDED SERVICES AT SPOKANE TREATMENT AND RECOVERY SERVICES (STARS) FOR SOBERING, TRIAGE, AND TRANSITION (STaT) SERVICES

RESOLUTION

WHEREAS, pursuant to the Constitution and laws of the State of Washington, Spokane County, Washington is a class A county duly organized and existing; and

WHEREAS, pursuant to the provisions of Revised Code of Washington (RCW) 36.01.030, the powers of Spokane County ("County") can only be exercised by the Board of County Commissioners of Spokane County, Washington ("Board"); and

WHEREAS, as part of a nationwide agreement, the Washington State Attorney General's Office settled litigation against opioid distributors and the Spokane Regional Service Area is receiving a portion of those opioid settlement funds as part of the collective agreement under the One Washington Memorandum of Understanding (MOU). As part of the One Washington MOU, the opioid settlement funds must be utilized for specifically approved purposes such as improving treatment of opioid use disorders, providing supports and resources for those struggling with opioid use disorder, addressing the needs of pregnant or parenting women (PPW) & their families, prevention of overprescribing, education support for first responders, etc.; and

WHEREAS, in response to the award of the Opioid Settlement funds, the Spokane Board of County Commissioners (BoCC) directed the Spokane County Community Services Department (CSD) to provide guidance, assist in obtaining and collecting community feedback, oversee service delivery, and to implement opioid priority investments in alignment with priorities specific to the Spokane region as identified by the BoCC; and

WHEREAS, Spokane County has been diligently implementing a comprehensive array of opioid abatement, mitigation, and treatment services as part of the opioid settlement priority investments directed by the BoCC, which includes supported housing for Pregnant and Parenting woman and families of babies with Neonatal Abstinence Syndrome (NAS),twenty-three (23) hour Crisis Relief and Sobering Service expansion, expansion of crisis relief, sobering, and treatment Services, and ongoing evaluation of system needs & gap areas;

WHEREAS, during the January 27, 2025 BoCC Strategic Planning Meeting, along with April 29, 2025 BoCC Briefing, the Board approved the collaboration, negotiation and eventual creation of an inter-local agreement (ILA) with the City of Spokane to support the expansion of Spokane County's existing Sobering, Triage, and Transition (STaT) program with Spokane Treatment and Recovery Services (STARS) through the investment of the City of Spokane's opioid settlement funds; and

WHEREAS, the expansion of STaT services at STARS will leverage existing resources while utilizing both City and County Opioid funding toward a regional goal of addressing the substance use and Opioid crisis impacting the community, and increase capacity of the STaT program up to a total of twenty-four (24) treatment slots. The City of Spokane has agreed to pay Spokane County a one-time sum of $400,000.00 to support this program, via the ILA, 25ASO2968.

NOW, THEREFORE BE IT RESOLVED by the Spokane Board of the County Commissioners approves the ILA, 25ASO2968, with the City of Spokane, in relation to terms as described herein.

BE IT FURTHER RESOLVED that the Chair of the Board, a majority of the Board, or the Chief Executive Officer or his designee, may execute, at other than an open meeting, the contract attached hereto and any and all documents to implement the contract, as well as any subsequent amendments after review by the Grants Administrator or designee.

PASSED AND ADOPTED this 3rd day of June, 2025.

BOARD OF COUNTY COMMISSIONERS
OF SPOKANE COUNTY, WASHINGTON

Mary L. Kuney, Chair

Josh Kerns, Vice-Chair

Al French, Commissioner

Amber Waldref, Commissioner

Chris Jordan, Commissioner

ATTEST:

Ginna Vasquez
Clerk of the Board

BOARD OF COMMISSIONERS SPOKANE COUNTY SEAL SPOKANE COUNTY, WA

Docusign Envelope ID: 30FC8988-8F6B-4C50-80A4-86460AE4D591

25ASO2968

INTERLOCAL AGREEMENT

THIS INTERLOCAL COOPERATION AGREEMENT (the "Agreement") is made and entered into this 3rd day of June, 2025, by and between **SPOKANE COUNTY**, a political subdivision of the State of Washington (the "County"), , whose address is 1116 W. Broadway Avenue, Spokane, WA 99260, hereinafter referred to as "**COUNTY**", and the **CITY OF SPOKANE** (the "City"), a municipal corporation of the State of Washington, whose address is 808 West Spokane Falls Blvd., collectively referred to as "the **PARTIES**."

RECITALS

A. This Agreement is entered into by the PARTIES pursuant to Chapter 39.34 RCW (Interlocal Cooperation Act) in order to jointly and cooperatively exercise their respective powers and duties, which includes, but is not limited to, joint financing of projects meant to provide greater benefit and impact for the citizens the PARTIES represent.

B. PARTIES are recipients of funds as part of the nationwide settlements against various opioid medication distributors, referred to as Opioid Settlement Funds, and are joint members of the Spokane County Opioid Abatement Council.

C. PARTIES share the common mission of seeking to improve the welfare and health of all citizens within their communities, including providing short-term emergency services and long-term treatment services for those directly affected by the ongoing opioid crisis.

D. The City agrees to invest in existing and ongoing programs within the community with the goal of expanding access to more immediate treatment services for individuals impacted by Opioid crisis within Spokane County. Services include expansion of Sobering, Triage & Transition (STaT) services through Spokane Treatment and Recovery Services (STARS), which includes additional capacity of up to twelve (12) STaT slots. The County agrees to use the funds from the City to expand, enhance, and improve these services.

AGREEMENT

NOW, THEREFORE, in consideration of the mutual agreement among the PARTIES set forth below, and for valuable consideration, the PARTIES agree as follows:

1. Purpose of Agreement

The purpose of this Agreement is to provide an instrument for the coordination and administration of Opioid funds from City to the County for the expansion of treatment services.

2. Effective Date and Duration

This Agreement will commence on July 1, 2025 and terminate on June 30, 2026 unless terminated consistent with Section 5. This Agreement may be renewed for additional one year period based on funding. Renewal shall be effective upon written approval of the PARTIES.

3. Administrators

Each PARTY to this Agreement shall designate an individual (an "Administrator") to oversee and administer such PARTY's participation in this Agreement. The initial Administrators of the PARTIES shall be the following individuals:

For: **SPOKANE COUNTY**
Community Services Director & Integrated Behavioral Health Care Manager
1116 W. Broadway
Spokane, WA 99260

For: **CITY OF SPOKANE**
Deputy City Administrator
808 W. Spokane Falls Boulevard
Spokane, WA 99201

Any PARTY may change its Administrator at any time by delivering written notice of such PARTY's new Administrator to all other PARTIES.

4. Costs and Payment

A. City agrees to pay the County a lump sum of four Hundred Thousand Dollars ($400,000.00) of the City's Opioid funding. It shall be paid within thirty (30) days mutual ratification of this agreement, unless agreed otherwise by the PARTIES or in case of extraordinary circumstances as defined by RCW 39.76.020(5). If this Agreement is extended for subsequent years, payment shall be made within thirty (30) calendar days that all PARTIES affirm the renewal in writing, unless otherwise agreed in writing by the PARTIES or in case of extraordinary circumstances as defined by RCW 39.76.020(5).

B. If not all Opioid funds from the City are expended for the identified services prior to expiration of the Agreement, County shall advise the City regarding the value of unspent funds. Should the Parties renew the Agreement for an additional term, County shall prorate the City's payment for the following year to account for unspent funds. If the PARTIES do not renew the Agreement, unspent funds shall be returned from the County to City unless PARTIES reach an alternative resolution in writing.

C. The County shall exercise its discretion through its authorized agencies to allocate funds from City towards the provision and administration of services contemplated in the recitals of this Agreement. Should the City wish to modify how the County allocates funds or direct payments, such modifications must be agreed by the Parties in writing. Should Parties fail to reach a suitable agreement on expenditures, either party may exercise the right to terminate without cause for the following year as outlined in Section 5.

5. Termination

Notwithstanding any other provision of the Agreement to the contrary, either party may terminate this Agreement without cause prior to expiration of the contractual term by providing the other Party at least ninety (90) days' prior written notice of its election to terminate. Any funds not expended by County, excluding funds already encumbered in contract or designated for services already incurred up to the effective date of termination, for the contractual duration shall be returned to City.

6. Independent Contractors

County shall disburse funds from City to contracted agencies for the purposes of providing treatment services. Each PARTY shall be solely responsible for control, supervision, direction, and discipline of its own personnel.

7. Hold Harmless and Indemnification

A. Except in those situations where the PARTIES have statutory or common law immunity for their actions and/or inactions and to the extent permitted by state law, and for the limited purposes set forth in this Agreement, each Party shall protect, defend, hold harmless and indemnify the other Party, its officers, elected officials, agents and employees, while acting within the scope of their employment as such, from and against any and all claims (including demands, suits, penalties, liabilities, damages, costs, expenses, or losses of any kind or nature whatsoever including attorney's fees) arising out of or in any way resulting from such Party's own negligent acts, errors, or omissions or willful misconduct related to such Party's participation and obligations under this Agreement. Each Party agrees that its obligations under this subsection extend to any claim, demand, and/or cause of action brought by or on behalf of any of its employees or agents. For this purpose, each Party, by mutual negotiation, hereby waives, with respect to the other Party only, any immunity that would otherwise be available against such claims under the industrial insurance act provisions of Title 51 RCW. For the purposes of this provision, Provider shall be deemed covered equivalent to each other PARTY.

B. Each PARTY is responsible and assume liability for its own wrongful and/or negligent acts or omissions or those of their officials, officers, agents, or employees to the fullest extent required by law, and further agree to save, indemnify, defend, and hold harmless from any such liability. It is further provided that no liability shall attach to either party by reason of entering into this Agreement except as expressly provided herein.

C. In the case of negligence by all PARTIES, any damages allowed will be levied in proportion to the percentage of negligence attributable to each PARTY and each PARTY will have the right to seek contribution from the other responsible PARTY in proportion to the percentage of negligence attributable to the other PARTY.

D. These indemnification provisions shall survive any termination of this Agreement.

8. Liability Related to City Ordinances, Policies, Rules and Regulations

In executing this Agreement, the County does not assume liability or responsibility for or in any way release the City from any liability or responsibility which arises in whole or in part from the existence or effect of City of Spokane ordinances, policies, rules or regulations. If any cause, claim, suit, action or administrative proceeding is commenced in which the enforceability and/or validity of any such City ordinance, policy, rule or regulation is at issue, the City shall defend the same at its sole expense and, if judgment is entered or damages are awarded against the City, the County, or both, the City shall satisfy the same, including all chargeable costs and reasonable attorney's fees.

9. Compliance with Laws

In the performing its obligations under this Agreement, each Party shall comply with all applicable federal, state, and local laws, rules, and regulations.

10. Dispute Resolution

A. If a conflict arises between any of the PARTIES regarding or relating to the terms of or performance under this Agreement, then the PARTIES shall use their best efforts to resolve such conflict promptly and informally. Any dispute or controversy arising out of or relating to this Agreement, or breach thereof, shall be settled by the following procedure:

B. Level 1: Before entering into Level 2 or Level 3 of this Dispute Resolution Procedure (DRP), designated representatives of each Party shall enter into a series of meetings for the purpose of resolving the dispute or controversy. The Level 1 period shall begin when one Party gives written notice to the other by certified mail, personal, or electronic service. Such notice shall identify the dispute or controversy with particularity and state that the Party is commencing this Level 1 procedure to resolve the dispute. After receiving such notice, the PARTIES shall meet either in person or through electronic means. Should the dispute not be resolved within thirty (30) calendar days of the commencement of the Level 1 period, the dispute shall be advanced to Level 2.

C. Level 2: Only after the PARTIES have completed Level 1 of the DRP without resolving the dispute or controversy and before entering into Level 3 of the DRP, the PARTIES shall enter into a mediation process. Each Party shall bear its own

costs in preparing for and conducting mediation, except that the joint costs, if any, of the actual mediation proceeding shall be shared equally by the PARTIES. The PARTIES shall select a mutually agreeable mediator in Spokane County, Washington to aid the PARTIES in resolving the dispute or controversy. The mediator shall be a licensed attorney in the State of Washington and not be an employee or former employee of either Party. The mediation shall be held at a mutually agreeable date, time, and location. The PARTIES shall act in good faith to resolve disputes through mediation.

D. Level 3: Only after the completion of both Levels 1 and 2 above without a satisfactory resolution of the dispute or controversy, either party may bring a suit in the courts of competent jurisdiction within Spokane County, Washington.

11. Time of the Essence

Time is of the essence for each term of this Agreement, as well as any attachments, exhibits, or other materials incorporated herein.

12. Entire Agreement

This Agreement, and any attachments, exhibits, or other materials incorporated herein, constitutes the complete and exclusive understanding between the PARTIES regarding the subject matter hereto. There are no other promises, terms, or understandings regarding this Agreement.

13. Amendment

This Agreement may not be modified or amended in any manner except by a written document executed with the same formalities as required for this Agreement and signed by the PARTIES.

14. Governing Law and Venue

This Agreement shall be governed by and enforced in accordance with the substantive and procedural laws of the State of Washington. The venue of any action arising from or relating to this Agreement will be a court of competent jurisdiction in Spokane County, Washington.

15. No Waiver

If at any time a Party fails to require performance by another Party under this Agreement or fails to claim a breach of this Agreement by another Party, then such failure will not be construed as affecting any subsequent breach of this Agreement or the right to require performance or affect the ability to claim a breach of this Agreement.

16. No Assignment; No Third-Party Beneficiaries

This Agreement may not be assigned, either in whole or in part, by any Party in any manner distinct from what is specified in this agreement. Any attempt by any Party to assign any part of this Agreement to a third party will be null and void. No other person will be deemed to have any rights or privileges with respect to this Agreement.

17. No Separate Entity Necessary

This Agreement does not create nor seek to create a separate legal entity pursuant to RCW 39.34.030(3)(b).

18. Warranty of Authority

Each of the signatories hereto warrants and represents that he or she is competent and authorized to enter into this Agreement on behalf of the Party for whom he or she purports to sign this Agreement.

19. Execution in Counterparts

This Agreement may be executed in two or more counterparts, each of which shall constitute an original and all of which shall constitute one and the same Agreement.

20. SEVERABILITY. Any provision of the Agreement, which is declared invalid, void or illegal shall in no way affect, impair, or invalidate any other provision hereof; and such other provision shall remain in full force and effect.

[signature page follows]

IN WITNESS WHEREOF, the PARTIES have executed this Agreement as of the date first above written.

PASSED AND ADOPTED this 3rd day of June, 2025.

BOARD OF COUNTY COMMISSIONERS
OF SPOKANE COUNTY, WASHINGTON

Mary L. Kuney, Chair

Josh Kerns, Vice-Chair

Al French, Commissioner

Amber Waldref, Commissioner

Chris Jordan, Commissioner

ATTEST:

Ginna Vasquez
Clerk of the Board

BOARD OF COMMISSIONERS SPOKANE COUNTY SEAL SPOKANE COUNTY, WA

CITY OF SPOKANE

By Maggie Yates
Assistant City Administrator

Maggie Yates
Type or Pring Name and Title

ATTEST:

City Clerk

Approved as to form:

Michael J. Piccolo
Assistant City Attorney

CITY OF SPOKANE WASHINGTON

Submit to Clerk of the Board with available supporting materials (Resolutions, Agreements, Presentations, etc.)

AGENDA SHEET

SUBMITTING DEPARTMENT: Community Services

CONTACT PERSON: Justin Johnson, Jamie Gadd

PHONE NUMBER: 477-4510, 477-4512

CHECK TYPE OF MEETING BELOW:

☒ Regular Legislative Session Agenda

BELOW FOR CLERK'S USE ONLY:

Clerk's Resolution No.	25-0283
Approved:	Majority/Unanimous
Denied:	Majority/Unanimous
Renews/Amends No.	
Public Works No.	
Purchasing Dept. No.	

***AGENDA TITLE** (please provide a reasonably descriptive agenda title for this item:* In the matter of executing an interlocal agreement, 25ASO2968, with the City of Spokane, for expanded services at Spokane Treatment and Recovery Services (STARS) for sobering, triage, and transition (STaT) services.

***DESCRIPTIVE SUMMARY** (please provide anticipated fiscal and budgetary information & reason for request):* In response to the award of the Opioid Settlement funds, the Spokane Board of County Commissioners (BoCC) directed the Spokane County Community Services Department (CSD) to provide guidance, assist in obtaining and collecting community feedback, oversee service delivery, and to implement opioid priority investments in alignment with priorities specific to the Spokane region as identified by the BoCC.

One of the identified priorities was the expansion of crisis relief & sobering services and other direct services. The BoCC approved the collaboration, negotiation, and eventual creation of an inter-local agreement (ILA) with the City of Spokane to support the expansion of Spokane County's Sobering, Triage, and Transition (STaT) program with Spokane Treatment and Recovery Services (STARS) through investment of the City of Spokane's opioid settlement funds. The City of Spokane has agreed to pay Spokane County a one-time sum of $400,000.00 to support this program via the ILA, 25ASO2968.

***FISCAL IMPACT** (please provide anticipated fiscal and budgetary impact, with amount and source of funds, if applicable):* Acceptance of $400,000.00 from the City of Spokane

***REQUESTED BOARD ACTION** (if any):* Approve

Other County Departments Impacted - List any other departments that were notified in advance of this agenda item: Legal and Grants Management reviewed during the CivicClerk approval process

This Item will need to be codified in the Spokane County Code: No

docusign

Certificate Of Completion

Envelope Id: 30FC8988-8F6B-4C50-80A4-86460AE4D591
Subject: OPR 2025-0392 - CONTRACT - SPOKANE COUNTY INTERLOCAL AGREEMENT
Source Envelope:
Document Pages: 11
Certificate Pages: 5
AutoNav: Enabled
EnvelopeId Stamping: Enabled
Time Zone: (UTC-08:00) Pacific Time (US & Canada)

Signatures: 4
Initials: 0
Stamps: 1

Status: Completed

Envelope Originator:
Daniel Rose
808 W. Spokane Falls Blvd.
Spokane, WA 99201
drose@spokanecity.org
IP Address: 198.1.39.252

Record Tracking

Status: Original
6/3/2025 12:00:42 PM

Holder: Daniel Rose
drose@spokanecity.org

Location: DocuSign

Signer Events	Signature	Timestamp
Terri L. Pfister tpfister@spokanecity.org City Clerk City of Spokane Security Level: Email, Account Authentication (None)	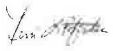 Signature Adoption: Uploaded Signature Image Using IP Address: 198.1.39.252	Sent: 6/3/2025 12:05:00 PM Viewed: 6/3/2025 1:16:36 PM Signed: 6/3/2025 1:16:52 PM
Electronic Record and Signature Disclosure: Not Offered via Docusign		
Michael J. Piccolo mpiccolo@spokanecity.org City Attorney Security Level: Email, Account Authentication (None)	Michael J. Piccolo Signature Adoption: Pre-selected Style Using IP Address: 155.190.3.5	Sent: 6/3/2025 1:16:53 PM Viewed: 6/3/2025 1:17:42 PM Signed: 6/3/2025 1:18:03 PM
Electronic Record and Signature Disclosure: Not Offered via Docusign		
Maggie Yates myates@spokanecity.org Assistant City Administrator Security Level: Email, Account Authentication (None)	Maggie Yates Signature Adoption: Pre-selected Style Using IP Address: 155.190.3.6	Sent: 6/3/2025 1:18:05 PM Viewed: 6/3/2025 1:20:07 PM Signed: 6/3/2025 1:20:59 PM
Electronic Record and Signature Disclosure: Accepted: 6/3/2025 1:20:07 PM ID: 2795bd79-7ea4-48c5-8006-0bdf59056e74		
Terri L. Pfister tpfister@spokanecity.org City Clerk City of Spokane Security Level: Email, Account Authentication (None)	  Signature Adoption: Uploaded Signature Image Using IP Address: 155.190.3.6	Sent: 6/3/2025 1:21:00 PM Resent: 6/3/2025 1:27:45 PM Viewed: 6/3/2025 1:44:51 PM Signed: 6/3/2025 1:52:52 PM
Electronic Record and Signature Disclosure: Not Offered via Docusign		

In Person Signer Events	Signature	Timestamp
Editor Delivery Events	**Status**	**Timestamp**
Agent Delivery Events	**Status**	**Timestamp**
Intermediary Delivery Events	**Status**	**Timestamp**
Certified Delivery Events	**Status**	**Timestamp**
Carbon Copy Events	**Status**	**Timestamp**
Witness Events	**Signature**	**Timestamp**
Notary Events	**Signature**	**Timestamp**

Envelope Summary Events	Status	Timestamps
Envelope Sent	Hashed/Encrypted	6/3/2025 12:05:00 PM
Envelope Updated	Security Checked	6/3/2025 1:21:53 PM
Envelope Updated	Security Checked	6/3/2025 1:46:23 PM
Certified Delivered	Security Checked	6/3/2025 1:44:51 PM
Signing Complete	Security Checked	6/3/2025 1:52:52 PM
Completed	Security Checked	6/3/2025 1:52:52 PM

Payment Events	Status	Timestamps

Electronic Record and Signature Disclosure

CONSUMER DISCLOSURE

From time to time, SHI International Corp OBO City of Spokane (we, us or Company) may be required by law to provide to you certain written notices or disclosures. Described below are the terms and conditions for providing to you such notices and disclosures electronically through the DocuSign, Inc. (DocuSign) electronic signing system. Please read the information below carefully and thoroughly, and if you can access this information electronically to your satisfaction and agree to these terms and conditions, please confirm your agreement by clicking the 'I agree' button at the bottom of this document.

Getting paper copies

At any time, you may request from us a paper copy of any record provided or made available electronically to you by us. You will have the ability to download and print documents we send to you through the DocuSign system during and immediately after signing session and, if you elect to create a DocuSign signer account, you may access them for a limited period of time (usually 30 days) after such documents are first sent to you. After such time, if you wish for us to send you paper copies of any such documents from our office to you, you will be charged a $0.00 per-page fee. You may request delivery of such paper copies from us by following the procedure described below.

Withdrawing your consent

If you decide to receive notices and disclosures from us electronically, you may at any time change your mind and tell us that thereafter you want to receive required notices and disclosures only in paper format. How you must inform us of your decision to receive future notices and disclosure in paper format and withdraw your consent to receive notices and disclosures electronically is described below.

Consequences of changing your mind

If you elect to receive required notices and disclosures only in paper format, it will slow the speed at which we can complete certain steps in transactions with you and delivering services to you because we will need first to send the required notices or disclosures to you in paper format, and then wait until we receive back from you your acknowledgment of your receipt of such paper notices or disclosures. To indicate to us that you are changing your mind, you must withdraw your consent using the DocuSign 'Withdraw Consent' form on the signing page of a DocuSign envelope instead of signing it. This will indicate to us that you have withdrawn your consent to receive required notices and disclosures electronically from us and you will no longer be able to use the DocuSign system to receive required notices and consents electronically from us or to sign electronically documents from us.

All notices and disclosures will be sent to you electronically

Unless you tell us otherwise in accordance with the procedures described herein, we will provide electronically to you through the DocuSign system all required notices, disclosures, authorizations, acknowledgements, and other documents that are required to be provided or made available to you during the course of our relationship with you. To reduce the chance of you inadvertently not receiving any notice or disclosure, we prefer to provide all of the required notices and disclosures to you by the same method and to the same address that you have given us. Thus, you can receive all the disclosures and notices electronically or in paper format through the paper mail delivery system. If you do not agree with this process, please let us know as described below. Please also see the paragraph immediately above that describes the consequences of your electing not to receive delivery of the notices and disclosures

electronically from us.

How to contact SHI International Corp OBO City of Spokane:

You may contact us to let us know of your changes as to how we may contact you electronically, to request paper copies of certain information from us, and to withdraw your prior consent to receive notices and disclosures electronically as follows:

To contact us by email send messages to: klund@spokanecity.org

To advise SHI International Corp OBO City of Spokane of your new e-mail address

To let us know of a change in your e-mail address where we should send notices and disclosures electronically to you, you must send an email message to us at klund@spokanecity.org and in the body of such request you must state: your previous e-mail address, your new e-mail address. We do not require any other information from you to change your email address..

In addition, you must notify DocuSign, Inc. to arrange for your new email address to be reflected in your DocuSign account by following the process for changing e-mail in the DocuSign system.

To request paper copies from SHI International Corp OBO City of Spokane

To request delivery from us of paper copies of the notices and disclosures previously provided by us to you electronically, you must send us an e-mail to klund@spokanecity.org and in the body of such request you must state your e-mail address, full name, US Postal address, and telephone number. We will bill you for any fees at that time, if any.

To withdraw your consent with SHI International Corp OBO City of Spokane

To inform us that you no longer want to receive future notices and disclosures in electronic format you may:

i. decline to sign a document from within your DocuSign session, and on the subsequent page, select the check-box indicating you wish to withdraw your consent, or you may;

ii. send us an e-mail to klund@spokanecity.org and in the body of such request you must state your e-mail, full name, US Postal Address, and telephone number. We do not need any other information from you to withdraw consent.. The consequences of your withdrawing consent for online documents will be that transactions may take a longer time to process..

Required hardware and software

Operating Systems:	Windows® 2000, Windows® XP, Windows Vista®; Mac OS® X
Browsers:	Final release versions of Internet Explorer® 6.0 or above (Windows only); Mozilla Firefox 2.0 or above (Windows and Mac); Safari™ 3.0 or above (Mac only)
PDF Reader:	Acrobat® or similar software may be required to view and print PDF files
Screen Resolution:	800 x 600 minimum
Enabled Security Settings:	Allow per session cookies

** These minimum requirements are subject to change. If these requirements change, you will be asked to re-accept the disclosure. Pre-release (e.g. beta) versions of operating systems and browsers are not supported.

Acknowledging your access and consent to receive materials electronically

To confirm to us that you can access this information electronically, which will be similar to other electronic notices and disclosures that we will provide to you, please verify that you were able to read this electronic disclosure and that you also were able to print on paper or electronically save this page for your future reference and access or that you were able to e-mail this disclosure and consent to an address where you will be able to print on paper or save it for your future reference and access. Further, if you consent to receiving notices and disclosures exclusively in electronic format on the terms and conditions described above, please let us know by clicking the 'I agree' button below.
By checking the 'I agree' box, I confirm that:

- I can access and read this Electronic CONSENT TO ELECTRONIC RECEIPT OF ELECTRONIC CONSUMER DISCLOSURES document; and

- I can print on paper the disclosure or save or send the disclosure to a place where I can print it, for future reference and access; and

- Until or unless I notify SHI International Corp OBO City of Spokane as described above, I consent to receive from exclusively through electronic means all notices, disclosures, authorizations, acknowledgements, and other documents that are required to be provided or made available to me by SHI International Corp OBO City of Spokane during the course of my relationship with you.

Agenda Sheet for City Council:

Committee: Public Safety **Date:** 11/05/2026

Committee Agenda type: Reports, Contracts & Claims

Council Meeting Date: 11/18/2026

Date Rec'd	10/23/2026		
Clerk's File #	OPR 2026-0907		
Cross Ref #			
Project #			
Submitting Dept	FLEET SERVICES	**Bid #**	
Contact Name/Phone	RICK GIDDINGS 5096257706	**Requisition #**	RE21037-000
Contact E-Mail	RGIDDINGS@SPOKANECITY.ORG		
Agenda Item Type	Purchase w/o Contract		
Council Sponsor(s)	KTELIS MCATHCART		
Sponsoring at Administrators Request	NO		
Lease? NO	**Grant Related?** NO	**Public Works?** NO	
Agenda Item Name	FLEET SERVICES - PRE APPROVAL TO PURCHASE 1 NEW OR USED VEHICLE FOR		

Agenda Wording

Pre-purchase approval for one new or used Ford Maverick or equivalent for SPD Traffic Unit from best price dealer. Price not to exceed $50,000 including sales tax and commissioning.

Summary (Background)

SPD would like to replace a traffic unit that has exceeded its economic lifecycle with a new or used Ford Maverick or equivalent from a yet to be determined dealership based on price and availability. Hybrid drivetrain will be prioritized if available. Total cost including sales tax is not to exceed $35,000 for the vehicle and $15,000 for commissioning costs.

What impacts would the proposal have on historically excluded communities?

None identified.

How will data be collected, analyzed, and reported concerning the effect of the program/policy by racial, ethnic, gender identity, national origin, income level, disability, sexual orientation, or other existing disparities?

Data will not be collected.

How will data be collected regarding the effectiveness of this program, policy, or product to ensure it is the right solution?

Fleet service collects lifecycle data for future analysis.

Describe how this proposal aligns with current City Policies, including the Comprehensive Plan, Sustainability Action Plan, Capital Improvement Program, Neighborhood Master Plans, Council Resolutions, and others?

Aligns with City Centralized Fleet Management Policy

Council Subcommittee Review

No subcommittee for this topic.

Fiscal Impact

Approved in Current Year Budget?	YES
Total Cost	$ 50,000
Current Year Cost	$ 50,000
Subsequent Year(s) Cost	$ 0

Narrative

Purchase will be made based on availability utilizing market analysis and blue book comparison tools.

Amount		Budget Account
Expense	$ 35,000	# 0680-11120-94210-56404-99999
Expense	$ 15,000	# 0680-11120-94210-56416-99999
Select	$	#
Select	$	#
Select	$	#
Select	$	#

Funding Source	One-Time
Funding Source Type	Reserves

Is this funding source sustainable for future years, months, etc?

Yes

Expense Occurrence	One-Time

Other budget impacts (revenue generating, match requirements, etc.)

Approvals		Additional Approvals	
Dept Head	CLARK, STEVEN S.	PURCHASING	NECHANICKY, JASON
Division Director	BOSTON, MATTHEW		
Accounting Manager	ZOLLINGER, NICHOLAS		
Legal	FAIRBORN, KATHERINE		
For the Mayor	PICCOLO, MIKE		

Distribution List

RGIDDINGS@SPOKANECITY.ORG	Tprince@spokanecity.org
ssclark@spokanecity.org	dhayes@spokanecity.org
fleetservicesaccounting@spokanecity.org	kahaack@spokanecity.org

Agenda Sheet for City Council:

Committee: PIES **Date:** 11/10/2026

Committee Agenda type: Discussion

Council Meeting Date: 11/18/2026

Date Rec'd	11/6/2026		
Clerk's File #	OPR 2026-0908		
Cross Ref #			
Project #			
Submitting Dept	HUMAN RESOURCES	**Bid #**	
Contact Name/Phone	DEBBIE 625-6373	**Requisition #**	
Contact E-Mail	DDECORDE@SPOKANECITY.ORG		
Agenda Item Type	Contract Item		
Council Sponsor(s)	BWILKERSON KKLITZKE		
Sponsoring at Administrators Request	NO		
Lease? NO	**Grant Related?** NO	**Public Works?** NO	
Agenda Item Name	APPROVAL OF SUPPLEMENTAL AGREEMENT (LOCAL 270)		

Agenda Wording

Approval of Supplemental Agreement between the City of Spokane and Local 270 (AFSCME) Regarding medical Premium Rates

Summary (Background)

Premiums for medical coverage for City employees have risen sharply, by 27.10% for 2027. Collective bargaining agreements with unions representing City employees set the City's minimum obligation for absorbing a share of the premium costs, but administration remains committed to easing the impact of increased premium costs by absorbing more of the employees' share increased cost of the premiums. The attached agreement adds plan options for employees and modifies the existing premium split between the City and the employees of Local 270, as follows: For the following plans, the 27.1% premium increase will be shared with the City absorbing 13.55% and employees 13.55%: a. Premera City Plan V b. Premera City Plan VI c. Premera City Plan VII d. Kaiser Permanente Plan III e. Kaiser Permanente Plan IV f. Kaiser Permanente Plan V For the newly created plans, the following premium share will be established for 2027: a. Premera City Plan VIII i. Premium share for all tiers will be paid 80% by the City and 20% by employees b. Kaiser Permanente Plan VI i. Premium share for all tiers will be paid 80% by the City and 20% by employees A tentative agreement was reached with Local 270 on 10/21/26, pending a ratification vote of Local 270/Local 270-PD's membership. The deadline for the Union to ratify this 2027 medical premium share agreement is 11/11/26.

What impacts would the proposal have on historically excluded communities?

Not applicable / internal to City employees

How will data be collected, analyzed, and reported concerning the effect of the program/policy by racial, ethnic, gender identity, national origin, income level, disability, sexual orientation, or other existing disparities?

Not applicable / internal to City employees

How will data be collected regarding the effectiveness of this program, policy, or product to ensure it is the right solution?

Not applicable / internal to City employees

Describe how this proposal aligns with current City Policies, including the Comprehensive Plan, Sustainability Action Plan, Capital Improvement Program, Neighborhood Master Plans, Council Resolutions, and others?

Not applicable / internal to City employees

Council Subcommittee Review

Not applicable.

Fiscal Impact	
Approved in Current Year Budget?	YES
Total Cost	**$**
Current Year Cost	**$**
Subsequent Year(s) Cost	**$**

Narrative

Amount		**Budget Account**
Select	**$**	**#**
Select	**$**	**#**
Select	**$**	**#**
Select	**$**	**#**
Select	**$**	**#**
Select	**$**	**#**

Funding Source

Funding Source Type Select

Is this funding source sustainable for future years, months, etc?

Expense Occurrence

Other budget impacts (revenue generating, match requirements, etc.)

Approvals		**Additional Approvals**	
Dept Head	WRIGHT, CHRISTOPHER		
Division Director	CWRIGHT		
Accounting Manager	CWRIGHT		
Legal	CWRIGHT		
For the Mayor	CWRIGHT		

Distribution List

OPR 2026-0908

SUPPLEMENTAL AGREEMENT

Between
The City of Spokane
and
Local 270, AFSCME

RE: 2027 Medical Benefit Premium Rates

Background:

Pursuant to this Supplemental Agreement, the City of Spokane and Local 270 and 270-PD agree for the purpose of establishing medical insurance premium rates for the 2027 calendar year coverage.

Agreement:

The Parties agree to amend Article IX – Health and Well-being, Section A – Medical, Life and Dental Insurance of Local 270's 2021 – 2025 Collective Bargaining Agreement regarding the split of premium increases to the 2027 medical plans. The total premium increase of 27.1% is being shared as 13.55% for the employee and 13.55% for the City for the 2027 calendar year coverage. The table below depicts the Benefit rates the Parties agree to accordingly.

TERMS OF AGREEMENT: This Agreement shall become effective on the first pay period of December 2026 and shall continue in full force and effect through the last pay period of November 2027 unless plan design changes, new plans and/or premium share rates are negotiated and implemented in 2027.

Per Article VIII – Health and Well Being, Section A – Medical, Life, and Dental Insurance:

Effective January 1, 2027, Local 270 and Local 270-PD employees may elect from eight (8) different medical plans. The plan options will be: Premera City Plan V, Premera City Plan VI, Premera City Plan VII and new Premera City Plan VIII -or- Kaiser Permanente

As amended 11-17-26

Plan III, Kaiser Permanente Plan IV, Kaiser Permanente Plan V and new Kaiser Permanente Plan VI.

Effective January 1, 2027 employees will have coverage under the Delta Dental Plan with $1,250 annual maximum and dental premiums will be paid 100% by the City if and until a successor Collective Bargaining Agreement changes that coverage. Employees are eligible to add legally registered domestic partners to their medical and dental plans.

Effective for plan year 2027, total medical plan premiums are increasing 27.10%. The resulting premium increases for these aforementioned eight (8) different medical plans will be shared as follows:

- For existing City plans added as plan options for Local 270, the following will apply:
    a. Premera City Plan VII
        i. Tier Employee/City share will mimic Premera Plan V
    b. Kaiser Permanente Plan V
        i. Tier Employee/City share will mimic Kaiser Permanente Plan III
- For the following plans, the 27.1% premium increase will be shared with the City absorbing 13.6% and employees 13.5%
    a. Premera City Plan V
    b. Premera City Plan VI
    c. Premera City Plan VII
    d. Kaiser Permanente Plan III
    e. Kaiser Permanente Plan IV
    f. Kaiser Permanente Plan V
- For the newly created plans, the following premium share will be established for 2027
    a. Premera City Plan VIII
        i. Premium share for all tiers will be paid 80% by the City and 20% by employees
    b. Kaiser Permanente Plan VI
        i. Premium share for all tiers will be paid 80% by the City and 20% by employees

In light of the sharp escalation in medical premiums, the City wants to investigate all options, from maintaining our self-insured system to switching to a pool like AWC or PEBB. To give additional time to investigate all possibilities, the City is providing a six-month investment in employee medical premiums. From January through June 2027, the City will cover 80% of the increased premium costs, with the employee share of the increase being 20%.

During those six months, the City is proposing the following schedule for the evaluation:

- Investigate options to replace our current self-insured plan, with expected completion of this investigation by Feb. 1, 2027.
- Present information and possible options to bargaining units in February 2027.
- Work with bargaining units to determine whether to retain the City's current medical approach or switch to a different one. A final determination should be achieved no later than May 1, 2027.
- Implement any changes as soon as possible, ideally either at midyear or end of 2027.

If a better alternative cannot be identified, the cost share will revert to the 13.6%/13.5% split on July 1, 2027.

FOR THE CITY:

_____
Allison Adam Date
Director, Human Resources

_____
Debbie DeCorde Date
Deputy Director, Human Resources

_____
Alexander Scott Date
City Administrator

Attest:

_____
Giacobbe Byrd Date
City Clerk

Approved as to form:

_____
Michael Piccolo Date
City Attorney

FOR THE UNION:

_____
Joe Cavanaugh Date
President, Local 270

_____
Natalie Hilderbrand Date
Staff Representative, AFSCME Council 2

Agenda Sheet for City Council:

Committee: PIES **Date:** 11/10/2026

Committee Agenda type: Reports, Contracts & Claims

Council Meeting Date: 11/18/2026

Date Rec'd	11/6/2026
Clerk's File #	OPR 2026-0909
Cross Ref #	
Project #	
Bid #	
Requisition #	

Submitting Dept	HUMAN RESOURCES
Contact Name/Phone	DEBBIE 625-6373
Contact E-Mail	DDECORDE@SPOKANECITY.ORG
Agenda Item Type	Contract Item
Council Sponsor(s)	BWILKERSON KKLITZKE
Sponsoring at Administrators Request	YES
Lease? NO	**Grant Related?** NO **Public Works?** NO
Agenda Item Name	APPROVAL OF SUPPLEMENTAL AGREEMENT (M & P / EXEMPT A,B)

Agenda Wording

Approval of Supplemental Agreement between the City of Spokane and Managerial and Professional Association regarding Medical Premium Rates

Summary (Background)

Premiums for medical coverage for City employees have risen sharply, by 27.10% for 2027. Collective bargaining agreements with unions representing City employees set the City's minimum obligation for absorbing a share of the premium costs, but administration remains committed to easing the impact of increased premium costs by absorbing more of the employees' share increased cost of the premiums. The anticipated agreement adds plan options for employees and modifies the existing premium split between the City and the employees of M & P Exempt A & B employees, as follows: For the following plans, the 27.1% premium increase will be shared with the City absorbing 13.55% and employees 13.55%: a. Premera City Plan V b. Premera City Plan VI c. Premera City Plan VII d. Kaiser Permanente Plan III e. Kaiser Permanente Plan IV f. Kaiser Permanente Plan V For the newly created plans, the following premium share will be established for 2027: a. Premera City Plan VIII i. Premium share for all tiers will be paid 80% by the City and 20% by employees b. Kaiser Permanente Plan VI i. Premium share for all tiers will be paid 80% by the City and 20% by employees A tentative agreement is expected soon with the bargaining unit, and is subject to ratification by union membership. This legislative item will be updated as soon as a draft agreement is available.

What impacts would the proposal have on historically excluded communities?

Not applicable / internal to City employees

How will data be collected, analyzed, and reported concerning the effect of the program/policy by racial, ethnic, gender identity, national origin, income level, disability, sexual orientation, or other existing disparities?

Not applicable / internal to City employees

How will data be collected regarding the effectiveness of this program, policy, or product to ensure it is the right solution?

Not applicable / internal to City employees

Describe how this proposal aligns with current City Policies, including the Comprehensive Plan, Sustainability Action Plan, Capital Improvement Program, Neighborhood Master Plans, Council Resolutions, and others?

Not applicable / internal to City employees

Council Subcommittee Review

Not applicable

Fiscal Impact	
Approved in Current Year Budget?	YES
Total Cost	**$**
Current Year Cost	**$**
Subsequent Year(s) Cost	**$**

Narrative

Amount		**Budget Account**
Select	**$**	**#**
Select	**$**	**#**
Select	**$**	**#**
Select	**$**	**#**
Select	**$**	**#**
Select	**$**	**#**

Funding Source	N/A
Funding Source Type	Select

Is this funding source sustainable for future years, months, etc?

Expense Occurrence	

Other budget impacts (revenue generating, match requirements, etc.)

Approvals		**Additional Approvals**	
Dept Head	WRIGHT, CHRISTOPHER		
Division Director	CWRIGHT		
Accounting Manager	CWRIGHT		
Legal	CWRIGHT		
For the Mayor	CWRIGHT		

Distribution List	
aadam@spokanecity.org	ddecorde@spokanecity.org
mboston@spokanecity.org	ascott@spokanecity.org

Agenda Sheet for City Council:

Committee: Date: N/A

Committee Agenda type:

Council Meeting Date: 11/18/2026

Date Rec'd	8/10/2026
Clerk's File #	CPR 2026-0002
Cross Ref #	
Project #	
Bid #	
Requisition #	

Submitting Dept	ACCOUNTING
Contact Name/Phone	JUAN D 625-6005
Contact E-Mail	JDRENGIFO@SPOKANECITY.ORG
Agenda Item Type	Claim Item
Council Sponsor(s)	
Sponsoring at Administrators Request	NO
Lease? NO	**Grant Related?** NO / **Public Works?** NO
Agenda Item Name	5600-CLAIMS-2026

Agenda Wording

Report of the Mayor of pending claims & payments of previously approved obligations through: 11/06/2026. Total $4,901,833.53 with Parks & Library Claims being approved by their respective boards. Claims excluding Parks & Library Total $4,425,699.01.

Summary (Background)

Pages 1-25 Check numbers: 00623351-00623521 Credit Card numbers: 003767-003787 ACH payment numbers: 158397-158609 On file for review in City Clerks Office: 25 Page listing of Claims

What impacts would the proposal have on historically excluded communities?

How will data be collected, analyzed, and reported concerning the effect of the program/policy by racial, ethnic, gender identity, national origin, income level, disability, sexual orientation, or other existing disparities?

How will data be collected regarding the effectiveness of this program, policy, or product to ensure it is the right solution?

Describe how this proposal aligns with current City Policies, including the Comprehensive Plan, Sustainability Action Plan, Capital Improvement Program, Neighborhood Master Plans, Council Resolutions, and others?

Council Subcommittee Review

Fiscal Impact	
Approved in Current Year Budget?	
Total Cost	**$**
Current Year Cost	**$**
Subsequent Year(s) Cost	**$**

Narrative

Amount		**Budget Account**
Expense	**$** 4,425,699.01	**#** Various
Select	**$**	**#**
Select	**$**	**#**
Select	**$**	**#**
Select	**$**	**#**
Select	**$**	**#**

Funding Source

Funding Source Type Select

Is this funding source sustainable for future years, months, etc?

Expense Occurrence

Other budget impacts (revenue generating, match requirements, etc.)

Approvals		**Additional Approvals**	
Dept Head	BAIRD, CHRISTI		
Division Director	STRATTON, JESSICA		
Accounting Manager			
Legal			
For the Mayor			

Distribution List

ACCOUNTSPAYABLE@SPOKANECITY.ORG	

REPORT: PG3620 DATE: 11/09/26
SYSTEM: FMSAP APPROVAL FUND SUMMARY TIME: 07:54
USER: MANAGER PAGE: 1
RUN NO: 49

FUND	FUND NAME	AMOUNT
0100	GENERAL FUND	259,466.31
1100	STREET FUND	24,214.06
1200	CODE ENFORCEMENT FUND	3,782.50
1360	GENERAL FUND GRANTS	0.00
1380	SPOKANE SAFE STREETS FOR ALL	132,011.90
1400	PARKS AND RECREATION FUND	1,467.58
1425	AMERICAN RESCUE PLAN	71,340.00
1440	FIRE GRANTS MISCELLANEOUS	897.38
1460	PARKING METER REVENUE FUND	64,895.61
1500	PATHS AND TRAILS RESERVE FUND	1,565.59
1510	SPOKANE UNITED 911 NETWORK	32,736.05
1620	PUBLIC SAFETY & JUDICIAL GRANT	30,485.49
1640	COMMUNICATIONS BLDG M&O FUND	16,079.81
1940	CHANNEL FIVE EQUIPMENT RESERVE	69,826.86
1970	SPOKANE FIRE DEPARTMENT	72,983.51
3200	ARTERIAL STREET FUND	718,374.95
4100	WATER & HYDROELECTRIC SERVICES	139,399.17
4250	INTEGRATED CAPITAL MANAGEMENT	311,843.76
4300	WASTEWATER MANAGEMENT FUND	128,975.71
4480	SOLID WASTE FUND	433,629.93
4700	DEVELOPMENT SERVICES	38,003.18
5100	FLEET SERVICES FUND	141,553.42
5200	PUBLIC WORKS AND UTILITIES	997.16
5300	IT FUND	23,781.08
5310	IT CAPITAL REPLACEMENT FUND	15,721.62
5500	PURCHASING AND CONTRACTS	67.19
5600	ACCOUNTING SERVICES	42.55
5750	OFFICE OF PERFORMANCE MGMT	192.40
5800	RISK MANAGEMENT FUND	23,924.58
5810	WORKERS' COMPENSATION FUND	4,790.02
5830	EMPLOYEES BENEFITS FUND	643,044.89
5900	FACILITIES MANAGEMENT FUND OPS	845.41
5901	ASSET MANAGEMENT FUND CAPITAL	585,743.14
5903	PROPERTY ACQUISITION FIRE	2,111.09
6070	FIREFIGHTERS' PENSION FUND	55,573.72
6080	POLICE PENSION FUND	36,253.71
6255	LAW ENFORCEMENT RECORDS MGMT	266.50
	TOTAL:	4,086,887.83

REPORT: PG3630
SYSTEM: FMSAP
USER: MANAGER
RUN NO: 49

DATE: 11/09/26
TIME:
PAGE: 1

PROCESSING OF VOUCHERS RESULTS IN CLAIMS AS FOLLOWS:

0020 - NONDEPARTMENTAL

DESIMONE CONSULTING LLC	CONTRACTUAL SERVICES ACH PMT NO. - 80158405	6,666.00
SPOKANE COUNTY FIRE DIST 10	CONTRACTUAL SERVICES ACH PMT NO. - 80158503	56,680.17
SPOKANE COUNTY FIRE DIST 9	OPERATING RENTALS/LEASES ACH PMT NO. - 80158460	3,319.02
SPOKANE COUNTY LIBRARY DISTRICT	CONTRACTUAL SERVICES CHECK NO. - 00623388	55,387.73
TOTAL FOR 0020 - NONDEPARTMENTAL		122,052.92

0030 - OFFICE OF POLICE OMBUDS

GEORGE PEREZVELEZ	OTHER TRANSPORTATION EXPENSES ACH PMT NO. - 80158514	424.08
GEORGE PEREZVELEZ	PER DIEM ACH PMT NO. - 80158514	138.00
RIVER PARK SQUARE LLC	PARKING/TOLLS (LOCAL) ACH PMT NO. - 80158457	200.00
TOTAL FOR 0030 - OFFICE OF POLICE OMBUDS		762.08

0100 - GENERAL FUND

KODIAK GENERAL CONTRACTING PO BOX 11742	PERMIT REFUNDS PAYABLE CHECK NO. - 00623484	150.00
MOORE IACOFANO GOLTSMAN INC DBA MIG INC	GRANT CASH PASS THRU ACCOUNT ACH PMT NO. - 80158547	2,721.10
RICHARD WALLIS	GRANT CASH PASS THRU ACCOUNT ACH PMT NO. - 80158608	184.00
SARAH THOMPSON	GRANT CASH PASS THRU ACCOUNT CHECK NO. - 00623517	184.00
SHANNON DAVIS	GRANT CASH PASS THRU ACCOUNT CHECK NO. - 00623482	184.00

SHARON OLIVER	GRANT CASH PASS THRU ACCOUNT CHECK NO. - 00623510	184.00
SPOKANE COUNTY PROSECUTING ATTORNEY	COUNTY CRIME VICTIM & WITNESS CHECK NO. - 00623403	1,000.11
STEPHEN SZAMBELAN	GRANT CASH PASS THRU ACCOUNT ACH PMT NO. - 80158607	184.00

PROCESSING OF VOUCHERS RESULTS IN CLAIMS AS FOLLOWS:

TOTAL FOR 0100 - GENERAL FUND	4,791.21

0230 - CIVIL SERVICE

ANDREW CHIAVARAS 3301 CAROTHERS RD	PROFESSIONAL SERVICES CHECK NO. - 00623361	405.96
DENNIS SCHAFER 110 INVERNESS RD	PROFESSIONAL SERVICES CHECK NO. - 00623363	295.00
JUSTIN HENSLEY 7835 W 269TH	PROFESSIONAL SERVICES CHECK NO. - 00623365	467.00
SAMUEL DOUGAN 16131 S REDLAND RD	PROFESSIONAL SERVICES CHECK NO. - 00623364	526.90
STEVEN AUSTIN 5427 ORIOLE LANE	PROFESSIONAL SERVICES CHECK NO. - 00623362	506.28
TOTAL FOR 0230 - CIVIL SERVICE		2,201.14

0260 - OFFICE OF THE CITY CLERK

PS2 GROUP LLC	PRINTING/BINDING/REPRO ACH PMT NO. - 80158456	147.69
TOTAL FOR 0260 - OFFICE OF THE CITY CLERK		147.69

0300 - HUMAN SERVICES

ACRANET CBS BRANCH/DIV OF CBS REPORTING INC	BACKGROUND CHECKS ACH PMT NO. - 80158440	54.55
TOTAL FOR 0300 - HUMAN SERVICES		54.55

0320 - COUNCIL

RIVER PARK SQUARE LLC	PARKING/TOLLS (LOCAL) ACH PMT NO. - 80158424	1,400.00
TOTAL FOR 0320 - COUNCIL		1,400.00

0370 - ENGINEERING SERVICES

AT&T MOBILITY	CELL PHONE CHECK NO. - 00623367	1,234.51
COPIERS NORTHWEST INC	OPERATING RENTALS/LEASES ACH PMT NO. - 80158532	304.96

PROCESSING OF VOUCHERS RESULTS IN CLAIMS AS FOLLOWS:

PS2 GROUP LLC	OFFICE SUPPLIES ACH PMT NO. - 80158456	147.69
RIVER PARK SQUARE LLC	PARKING/TOLLS (LOCAL) ACH PMT NO. - 80158498	200.00
VERIZON WIRELESS	CELL PHONE ACH PMT NO. - 80158462	225.08
VERIZON WIRELESS	IT/DATA SERVICES ACH PMT NO. - 80158462	475.12
VESTIS GROUP INC DBA VESTIS SERVICES INC	LAUNDRY/JANITORIAL SERVICES ACH PMT NO. - 80158601	39.00
TOTAL FOR 0370 - ENGINEERING SERVICES		2,626.36

0410 - FINANCE AND ADMINISTRATION

AT&T MOBILITY	CELL PHONE CHECK NO. - 00623397	115.44
TOTAL FOR 0410 - FINANCE AND ADMINISTRATION		115.44

0500 - OFFICE OF THE CITY ATTORNEY

AVISTA UTILITIES	UTILITY LIGHT/POWER SERVICE ACH PMT NO. - 80158474	810.56
AVISTA UTILITIES	UTILITY NATURAL GAS ACH PMT NO. - 80158474	192.51
PS2 GROUP LLC	OFFICE SUPPLIES	

	ACH PMT NO. - 80158456	73.19

TOTAL FOR 0500 - OFFICE OF THE CITY ATTORNEY		1,076.26

0520 - OFFICE OF THE MAYOR

COPIERS NORTHWEST INC	OPERATING RENTALS/LEASES	
	ACH PMT NO. - 80158478	372.69
RIVER PARK SQUARE LLC	PARKING/TOLLS (LOCAL)	
	ACH PMT NO. - 80158424	400.00
SPOKANE ENVELOPE LLC	PRINTING/BINDING/REPRO	
DBA ALLIED ENVELOPE	ACH PMT NO. - 80158515	144.56
W W GRAINGER INC	OFFICE SUPPLIES	
DBA GRAINGER	ACH PMT NO. - 80158486	216.86

TOTAL FOR 0520 - OFFICE OF THE MAYOR		1,134.11

PROCESSING OF VOUCHERS RESULTS IN CLAIMS AS FOLLOWS:

0550 - NEIGHBORHOOD SERVICES

CHIEF GARRY PARK NEIGHBORHOOD	CONTRACTUAL SERVICES	
COUNCIL	ACH PMT NO. - 80158525	552.87
POLLYANNE F BIRGE	LOCAL MILEAGE	
	CHECK NO. - 00623479	121.08

TOTAL FOR 0550 - NEIGHBORHOOD SERVICES		673.95

0560 - MUNICIPAL COURT

AT&T MOBILITY	CELL PHONE	
	CHECK NO. - 00623367	500.24
COMCAST	IT/DATA SERVICES	
	CHECK NO. - 00623398	89.95
MANAGEMENT ASSOCIATION	REGISTRATION/SCHOOLING	
YAKIMA COUNTY DISTRICT COURT	CHECK NO. - 00623399	500.00
RIVER PARK SQUARE LLC	PARKING/TOLLS (LOCAL)	
	ACH PMT NO. - 80158498	580.00
SAFEGUARD BUSINESS SYSTEMS INC	OPERATING SUPPLIES	
	CHECK NO. - 00623402	332.43
SPOKANE COUNTY TREASURER	SPOKANE COUNTY	
	ACH PMT NO. - 80158427	629.04

TOTAL FOR 0560 - MUNICIPAL COURT		2,631.66

0620 - HUMAN RESOURCES

AT&T MOBILITY	CELL PHONE CHECK NO. - 00623397	321.15
DEVRIES INFORMATION MANAGEMENT	CONTRACTUAL SERVICES ACH PMT NO. - 80158480	51.12
TOTAL FOR 0620 - HUMAN RESOURCES		372.27

0680 - POLICE

COMCAST	IT/DATA SERVICES CHECK NO. - 00623471	607.06
COPIERS NORTHWEST INC	EQUIPMENT REPAIRS/MAINTENANCE ACH PMT NO. - 80158532	183.27
COPIERS NORTHWEST INC	OPERATING RENTALS/LEASES ACH PMT NO. - 80158532	6,656.96

PROCESSING OF VOUCHERS RESULTS IN CLAIMS AS FOLLOWS:

DAVID W RICHARDS	PER DIEM ACH PMT NO. - 80158437	117.00
DAVID W SINGLEY	PER DIEM ACH PMT NO. - 80158438	117.00
DEVRIES INFORMATION MANAGEMENT	MISC SERVICES/CHARGES ACH PMT NO. - 80158563	576.00
EVERGREEN STATE TOWING LLC DBA SPOKANE VALLEY TOWING	TOWING EXPENSE ACH PMT NO. - 80158540	25,596.19
GALLS LLC	CLOTHING CREDIT CARD PMT NO. - 70003782	6,482.22
GALLS LLC	OPERATING SUPPLIES CREDIT CARD PMT NO. - 70003782	3,106.24
GALLS LLC	PROTECTIVE GEAR/CLOTHING CREDIT CARD PMT NO. - 70003782	31,325.22
JORDAN RUPLEY	PER DIEM CHECK NO. - 00623387	363.00
KATHLEEN J ARMSTRONG	PER DIEM	

	ACH PMT NO. - 80158605	117.00
LEPS-PSS PLLC DBA	MEDICAL SERVICES	
PUBLIC SAFETY PSYCHOLOGICAL	ACH PMT NO. - 80158549	1,560.00
LIFE ASSIST INC	OPERATING SUPPLIES	
	ACH PMT NO. - 80158580	4,289.27
NICHOLAS ENGLISH	PER DIEM	
	ACH PMT NO. - 80158464	231.00
PET EMERGENCY CLINIC	VETERINARY SERVICES	
	CHECK NO. - 00623511	508.28
PS2 GROUP LLC	PRINTING/BINDING/REPRO	
	ACH PMT NO. - 80158456	371.21
ROBERT S LESSER	PER DIEM	
	ACH PMT NO. - 80158436	231.00
SAN DIEGO POLICE EQUIPMENT	AMMUNITION	
COMPANY INC	ACH PMT NO. - 80158592	7,475.97
SPENCER CLOUSE	PER DIEM	
	CHECK NO. - 00623370	363.00
SPOKANE COUNTY TREASURER	SPOKANE COUNTY	
	ACH PMT NO. - 80158595	1,016.90
SPOKANE POLICE DEPARTMENT	NON-TRAVEL MEALS/LGHT RFRSHMT	
IMPREST FUND	CHECK NO. - 00623515	98.54
STERICYCLE INC	HAZARDOUS WASTE DISPOSAL	
DBA SHRED-IT	ACH PMT NO. - 80158597	1,420.50

PROCESSING OF VOUCHERS RESULTS IN CLAIMS AS FOLLOWS:

STEVEN J WOHL	OTHER TRANSPORTATION EXPENSES	
	ACH PMT NO. - 80158609	100.92
US BANK	NON-TRAVEL MEALS/LGHT RFRSHMT	
POLICE ADVANCE TRAVEL	ACH PMT NO. - 80158552	5,027.00
US BANK	PER DIEM	
POLICE ADVANCE TRAVEL	ACH PMT NO. - 80158552	15,588.00
VESTIS GROUP INC	LAUNDRY/JANITORIAL SERVICES	
DBA VESTIS SERVICES INC	ACH PMT NO. - 80158601	10.09
W W GRAINGER INC	OPERATING SUPPLIES	
DBA GRAINGER	ACH PMT NO. - 80158449	1,692.06
WASHINGTON LEOFF	PENSION LEOFF II 3.5%	
DEPT OF RETIREMENT SYSTEMS	CHECK NO. - 00623392	1,781.84
YWCA	OPERATING RENTALS/LEASES	

	ACH PMT NO. - 80158555	1,222.41
TOTAL FOR 0680 - POLICE		118,235.15

0690 - COMMUNITY JUSTICE SERVICES

DEVRIES INFORMATION MANAGEMENT	MISC SERVICES/CHARGES	
	ACH PMT NO. - 80158480	32.00
TOTAL FOR 0690 - COMMUNITY JUSTICE SERVICES		32.00

0700 - PUBLIC DEFENDER

AVISTA UTILITIES	UTILITY LIGHT/POWER SERVICE	
	ACH PMT NO. - 80158474	810.55
AVISTA UTILITIES	UTILITY NATURAL GAS	
	ACH PMT NO. - 80158474	192.51
JO L JACKSON	LEGAL SERVICES	
	CHECK NO. - 00623374	136.00
VESTIS GROUP INC	LAUNDRY/JANITORIAL SERVICES	
DBA VESTIS SERVICES INC	ACH PMT NO. - 80158463	20.46
TOTAL FOR 0700 - PUBLIC DEFENDER		1,159.52

1100 - STREET FUND

COPIERS NORTHWEST INC	OPERATING RENTALS/LEASES	
	ACH PMT NO. - 80158478	589.15
FASTENAL CO	OPERATING SUPPLIES	
	ACH PMT NO. - 80158484	213.88

PROCESSING OF VOUCHERS RESULTS IN CLAIMS AS FOLLOWS:

KRUEGER SHEET METAL COMPANY	OTHER IMPROVEMENTS	
	ACH PMT NO. - 80158489	3,798.29
SHAMROCK MANUFACTURING INC	REPAIR & MAINTENANCE SUPPLIES	
	ACH PMT NO. - 80158500	19,444.88
WALTER E NELSON CO	OPERATING SUPPLIES	
	CHECK NO. - 00623405	167.86
TOTAL FOR 1100 - STREET FUND		24,214.06

1200 - CODE ENFORCEMENT FUND

FOSTER GARVEY PC	LEGAL SERVICES CREDIT CARD PMT NO. - 70003778	247.75
NORTH COUNTRY SERVICES LLC	CONTRACTUAL SERVICES ACH PMT NO. - 80158585	3,319.04
PS2 GROUP LLC	PRINTING/BINDING/REPRO ACH PMT NO. - 80158456	147.69
SHERWIN WILLIAMS CO	OPERATING SUPPLIES ACH PMT NO. - 80158594	68.02
TOTAL FOR 1200 - CODE ENFORCEMENT FUND		3,782.50

1360 - GENERAL FUND GRANTS

MOORE IACOFANO GOLTSMAN INC DBA MIG INC	CONTRACTUAL SERVICES ACH PMT NO. - 80158547	2,721.10
MOORE IACOFANO GOLTSMAN INC DBA MIG INC	GRANT CASH PASS THRU ACCOUNT ACH PMT NO. - 80158547	2,721.10-
RICHARD WALLIS	GRANT CASH PASS THRU ACCOUNT ACH PMT NO. - 80158608	184.00-
RICHARD WALLIS	OPERATIONAL TRAVEL ACH PMT NO. - 80158608	184.00
SARAH THOMPSON	GRANT CASH PASS THRU ACCOUNT CHECK NO. - 00623517	184.00-
SARAH THOMPSON	OPERATIONAL TRAVEL CHECK NO. - 00623517	184.00
SHANNON DAVIS	GRANT CASH PASS THRU ACCOUNT CHECK NO. - 00623482	184.00-
SHANNON DAVIS	OPERATIONAL TRAVEL CHECK NO. - 00623482	184.00
SHARON OLIVER	GRANT CASH PASS THRU ACCOUNT CHECK NO. - 00623510	184.00-

PROCESSING OF VOUCHERS RESULTS IN CLAIMS AS FOLLOWS:

SHARON OLIVER	OPERATIONAL TRAVEL CHECK NO. - 00623510	184.00
STEPHEN SZAMBELAN	GRANT CASH PASS THRU ACCOUNT ACH PMT NO. - 80158607	184.00-
STEPHEN SZAMBELAN	OPERATIONAL TRAVEL	

	ACH PMT NO. - 80158607	184.00
TOTAL FOR 1360 - GENERAL FUND GRANTS		0.00

1380 - SPOKANE SAFE STREETS FOR ALL

AMERICAN TRAFFIC SOLUTIONS INC	CONTRACTUAL SERVICES ACH PMT NO. - 80158518	131,581.23
AVISTA UTILITIES	UTILITY LIGHT/POWER SERVICE ACH PMT NO. - 80158521	251.92
POLLYANNE F BIRGE	LOCAL MILEAGE CHECK NO. - 00623479	178.75
TOTAL FOR 1380 - SPOKANE SAFE STREETS FOR ALL		132,011.90

1400 - PARKS AND RECREATION FUND

ACRANET CBS BRANCH/DIV OF CBS REPORTING INC	BACKGROUND CHECKS ACH PMT NO. - 80158440	488.76
UNITED RENTALS NW INC	OPERATING SUPPLIES CHECK NO. - 00623391	978.82
TOTAL FOR 1400 - PARKS AND RECREATION FUND		1,467.58

1425 - AMERICAN RESCUE PLAN

KITTELSON & ASSOCIATES INC	CONTRACTUAL SERVICES ACH PMT NO. - 80158545	71,340.00
TOTAL FOR 1425 - AMERICAN RESCUE PLAN		71,340.00

1440 - FIRE GRANTS MISCELLANEOUS

WASHINGTON LEOFF DEPT OF RETIREMENT SYSTEMS	PENSION LEOFF II 3.5% CHECK NO. - 00623392	897.38
TOTAL FOR 1440 - FIRE GRANTS MISCELLANEOUS		897.38

1460 - PARKING METER REVENUE FUND

PROCESSING OF VOUCHERS RESULTS IN CLAIMS AS FOLLOWS:

CAREER PATH SERVICES	CONTRACTUAL SERVICES	

EMPLOYMENT AND TRAINING	CHECK NO. - 00623467	34,053.75
ELECTRONIC DATA COLLECTION CORPORATION	BANK FEES ACH PMT NO. - 80158537	1,593.40
ELECTRONIC DATA COLLECTION CORPORATION	LEGAL SERVICES ACH PMT NO. - 80158537	2,231.25
ELECTRONIC DATA COLLECTION CORPORATION	POSTAGE ACH PMT NO. - 80158537	984.62
ELECTRONIC DATA COLLECTION CORPORATION	PRINTING/BINDING/REPRO ACH PMT NO. - 80158537	834.00
ELECTRONIC DATA COLLECTION CORPORATION	SUBSCRIPTION BASED IT ARNGMTS ACH PMT NO. - 80158537	19,253.69
LAZ KARP ASSOCIATES LLC DBA LAZ PARKING NORTHWEST LLC	CONTRACTUAL SERVICES ACH PMT NO. - 80158415	4,364.00
SPECIALIZED PAVEMENT MARKING LLC	CONTRACTUAL SERVICES ACH PMT NO. - 80158426	1,580.90
TOTAL FOR 1460 - PARKING METER REVENUE FUND		64,895.61

1500 - PATHS AND TRAILS RESERVE FUND

ECO COUNTER INC	OPERATING SUPPLIES ACH PMT NO. - 80158565	1,565.59
TOTAL FOR 1500 - PATHS AND TRAILS RESERVE FUND		1,565.59

1510 - SPOKANE UNITED 911 NETWORK

ACRANET CBS BRANCH/DIV OF CBS REPORTING INC	BACKGROUND CHECKS ACH PMT NO. - 80158440	823.71
CAMTEK INC	CONSTRUCTION OF FIXED ASSETS ACH PMT NO. - 80158524	8,255.65
COLUMBIA ENGINEERING GROUP INC	CONTRACTUAL SERVICES ACH PMT NO. - 80158444	23,656.69
TOTAL FOR 1510 - SPOKANE UNITED 911 NETWORK		32,736.05

1620 - PUBLIC SAFETY & JUDICIAL GRANT

CONCEPT DEVELOPMENT CORP	MINOR EQUIPMENT CHECK NO. - 00623371	11,584.60
FRONTIER BEHAVIORAL HEALTH	CONTRACTUAL SERVICES ACH PMT NO. - 80158448	18,887.97

PROCESSING OF VOUCHERS RESULTS IN CLAIMS AS FOLLOWS:

WASHINGTON LEOFF	PENSION LEOFF II 3.5%	
DEPT OF RETIREMENT SYSTEMS	CHECK NO. - 00623392	12.92

TOTAL FOR 1620 - PUBLIC SAFETY & JUDICIAL GRANT		30,485.49

1640 - COMMUNICATIONS BLDG M&O FUND

AVISTA UTILITIES	UTILITY LIGHT/POWER SERVICE	
	ACH PMT NO. - 80158521	11,367.42
AVISTA UTILITIES	UTILITY NATURAL GAS	
	ACH PMT NO. - 80158521	1,216.68
CENTURYLINK	TELEPHONE	
	CHECK NO. - 00623468	274.96
ENVIRONMENT CONTROL OF SPOKANE	LAUNDRY/JANITORIAL SERVICES	
	ACH PMT NO. - 80158539	3,008.00
POINTE PEST CONTROL	BUILDING REPAIRS/MAINTENANCE	
	CHECK NO. - 00623512	212.75

TOTAL FOR 1640 - COMMUNICATIONS BLDG M&O FUND		16,079.81

1940 - CHANNEL FIVE EQUIPMENT RESERVE

AVIDEX INDUSTRIES LLC	COMMUNICATIONS EQUIPMENT	
	ACH PMT NO. - 80158556	69,826.86

TOTAL FOR 1940 - CHANNEL FIVE EQUIPMENT RESERVE		69,826.86

1970 - SPOKANE FIRE DEPARTMENT

AVISTA UTILITIES	UTILITY LIGHT/POWER SERVICE	
	ACH PMT NO. - 80158521	17,742.06
AVISTA UTILITIES	UTILITY NATURAL GAS	
	ACH PMT NO. - 80158521	6,089.18
COLEMAN OIL COMPANY LLC	MOTOR FUEL-OUTSIDE VENDOR	
	ACH PMT NO. - 80158527	12,915.33
ENVIRONMENT CONTROL OF SPOKANE	LAUNDRY/JANITORIAL SERVICES	
	ACH PMT NO. - 80158539	4,352.00
FASTENAL CO	MINOR EQUIPMENT	
	ACH PMT NO. - 80158568	44.69
FASTENAL CO	OPERATING SUPPLIES	

	ACH PMT NO. - 80158568	372.16
FASTENAL CO	REPAIR & MAINTENANCE SUPPLIES	
	ACH PMT NO. - 80158568	474.79

PROCESSING OF VOUCHERS RESULTS IN CLAIMS AS FOLLOWS:

FASTENAL CO	VEHICLE REPAIR & MAINT SUPPLY	
	ACH PMT NO. - 80158568	309.30
GALLS LLC	CLOTHING	
	CREDIT CARD PMT NO. - 70003782	2,766.85
HEALTHCALL LLC	CONTRACTUAL SERVICES	
ATTN: ACCOUNTING	ACH PMT NO. - 80158577	1,309.20
HUGHES FIRE EQUIPMENT INC	VEHICLE REPAIR & MAINT SUPPLY	
	CREDIT CARD PMT NO. - 70003784	8,581.13
KENWORTH SALES COMPANY	VEHICLE REPAIR & MAINT SUPPLY	
	ACH PMT NO. - 80158579	1,147.80
L N CURTIS & SONS	EQUIPMENT REPAIRS/MAINTENANCE	
	ACH PMT NO. - 80158561	336.03
L N CURTIS & SONS	VEHICLE REPAIR & MAINT SUPPLY	
	ACH PMT NO. - 80158561	2,007.75
LOREN DALE WAY	LODGING	
11705 VALLEY CREST DRIVE	CHECK NO. - 00623400	203.46
LOREN DALE WAY	OTHER TRANSPORTATION EXPENSES	
11705 VALLEY CREST DRIVE	CHECK NO. - 00623400	346.33
LOREN DALE WAY	PER DIEM	
11705 VALLEY CREST DRIVE	CHECK NO. - 00623400	215.00
NAPA AUTO PARTS	MINOR EQUIPMENT	
GENUINE PARTS CO	ACH PMT NO. - 80158583	9.69
NAPA AUTO PARTS	REPAIR & MAINTENANCE SUPPLIES	
GENUINE PARTS CO	ACH PMT NO. - 80158583	39.67
NAPA AUTO PARTS	VEHICLE REPAIR & MAINT SUPPLY	
GENUINE PARTS CO	ACH PMT NO. - 80158583	1,778.86
NORCO INC	OPERATING SUPPLIES	
	CREDIT CARD PMT NO. - 70003785	98.60
NORCO INC	SAFETY SUPPLIES	
	CREDIT CARD PMT NO. - 70003785	277.02
POMP'S TIRE SERVICE INC	VEHICLE REPAIR & MAINT SUPPLY	
	ACH PMT NO. - 80158589	57.28
POMP'S TIRE SERVICE INC	VEHICLE REPAIRS/MAINT	

	ACH PMT NO. - 80158589	608.23
PS2 GROUP LLC	PRINTING/BINDING/REPRO	
	ACH PMT NO. - 80158590	168.17
ROMAINE ELECTRIC CORPORATION	VEHICLE REPAIR & MAINT SUPPLY	
	CHECK NO. - 00623514	1,008.80
SPOKANE FIRE STATION MUSEUM	MISC SERVICES/CHARGES	
	ACH PMT NO. - 80158596	2,400.00

PROCESSING OF VOUCHERS RESULTS IN CLAIMS AS FOLLOWS:

UKG KRONOS SYSTEMS LLC	SOFTWARE MAINTENANCE	
	ACH PMT NO. - 80158461	738.88
WASHINGTON LEOFF	PENSION LEOFF II 3.5%	
DEPT OF RETIREMENT SYSTEMS	CHECK NO. - 00623392	6,585.25
	TOTAL FOR 1970 - SPOKANE FIRE DEPARTMENT	72,983.51

3200 - ARTERIAL STREET FUND

ACTIVE CONSTRUCTION INC	CONSTRUCTION OF FIXED ASSETS	
	CHECK NO. - 00623396	84,400.77
CORRIDOR CONTRACTORS LLC	CONSTRUCTION OF FIXED ASSETS	
	ACH PMT NO. - 80158401	572,346.43
DOWL LLC	CONSTRUCTION OF FIXED ASSETS	
	ACH PMT NO. - 80158481	367.19
KITTELSON & ASSOCIATES INC	CONTRACTUAL SERVICES	
	ACH PMT NO. - 80158545	51,534.84
THOMAS DEAN & HOSKINS INC	CONSTRUCTION OF FIXED ASSETS	
	CREDIT CARD PMT NO. - 70003777	9,725.72
	TOTAL FOR 3200 - ARTERIAL STREET FUND	718,374.95

4100 - WATER & HYDROELECTRIC SERVICES

1ST CHOICE ENVIRONMENTAL	PERMITS/OTHER FEES	
	ACH PMT NO. - 80158439	872.00
ABC SUPPLY CO INC	REFUNDS	
1 ABC PKWY #201	CHECK NO. - 00623375	203.05
ACTION MATERIALS	REPAIR & MAINTENANCE SUPPLIES	
	ACH PMT NO. - 80158441	4,059.09
AVISTA UTILITIES	PUBLIC UTILITY SERVICE	

	ACH PMT NO. - 80158443	96.10
CHARLES TABOR	BUILDING REPAIRS/MAINTENANCE	
DBA ALLIED LOCK SERVICE LLC	ACH PMT NO. - 80158473	4,790.85
CHRISTIE WEINSTEIN	REFUNDS	
5505 E 14TH AVE	CHECK NO. - 00623354	182.58
COLETTE BROWN	REFUNDS	
11327 AVISTA LN	CHECK NO. - 00623376	419.52
COLUMBIA ELECTRIC SUPPLY/DIV	REGISTRATION/SCHOOLING	
CONSOLIDATED ELECTRICAL	ACH PMT NO. - 80158528	2,000.00
CONSOLIDATED SUPPLY CO	INVENTORY PURCHASES FOR WATER	
	CREDIT CARD PMT NO. - 70003769	12,654.51

PROCESSING OF VOUCHERS RESULTS IN CLAIMS AS FOLLOWS:

CORE & MAIN LP	INVENTORY PURCHASES FOR WATER	
	ACH PMT NO. - 80158533	11,180.67
DP NICOLI INC	OPERATING RENTALS/LEASES	
	ACH PMT NO. - 80158564	654.42
ENGINEERING ECONOMICS INC	CONSTRUCTION OF FIXED ASSETS	
	ACH PMT NO. - 80158538	1,075.50
ESTATE OF WILLIAM BLAKE STROHM	REFUNDS	
688 S HIGHWAY 21	CHECK NO. - 00623355	119.74
FASTENAL CO	REPAIR & MAINTENANCE SUPPLIES	
	ACH PMT NO. - 80158447	1,697.09
H D FOWLER COMPANY	INVENTORY PURCHASES FOR WATER	
	ACH PMT NO. - 80158575	18,341.89
HYDRAULIC INSTITUTE, INC.	OTH DUES/SUBSCRIPTNS/MEMBERSHP	
	ACH PMT NO. - 80158450	2,440.00
JEANETTE HARDWICK	REFUNDS	
312 W HASTINGS RD APT 145	CHECK NO. - 00623377	174.91
JUDITH E THOMAS	REFUNDS	
6917 N HOWARD ST	CHECK NO. - 00623356	172.44
KRISTI HUNZIKER	REFUNDS	
3204 SUMMITVIEW AVE	CHECK NO. - 00623378	34.88
KXLY	CONTRACTUAL SERVICES	
SPOKANE TELEVISION INC	ACH PMT NO. - 80158546	3,498.50
LENNAR NORTHWEST LLC	REFUNDS	
33820 WEYERHAEUSER WAY S	CHECK NO. - 00623506	1,277.44
LINDE GAS & EQUIPMENT INC	REPAIR & MAINTENANCE SUPPLIES	

	CHECK NO. - 00623386	599.88
NEPTUNE TECHNOLOGY GROUP INC	MACHINERY/EQUIPMENT	
	ACH PMT NO. - 80158584	31,890.48
NORCO INC	OTHER MISC CHARGES	
	CREDIT CARD PMT NO. - 70003772	225.00
NORFOLK IRON & METAL CO	REPAIR & MAINTENANCE SUPPLIES	
DBA CDA METALS	CHECK NO. - 00623480	3,177.37
PATRICIA GILLOGLY	REFUNDS	
1302 W DAIRY FARM LN	CHECK NO. - 00623357	1,380.56
RENEE MAIN	REFUNDS	
417 W 1ST AVE UNIT 1D	CHECK NO. - 00623380	134.80
ROBERT MAERZ	REFUNDS	
331 PALMETTO ST	CHECK NO. - 00623359	150.98
R.C. SCHWARTZ & ASSOCIATES INC	REFUNDS	
159 S COWLEY ST	CHECK NO. - 00623379	1,276.16

PROCESSING OF VOUCHERS RESULTS IN CLAIMS AS FOLLOWS:

SPOKANE REGIONAL CLEAN AIR	PERMITS/OTHER FEES	
AGENCY	CHECK NO. - 00623389	5,262.00
TANNER REISENAUER	REFUNDS	
19855 MOLLY LN	CHECK NO. - 00623381	170.52
THOMAS CAFERRO	REFUNDS	
342 ASHLAND ST	CHECK NO. - 00623360	190.31
TITAN TRUCK EQUIPMENT	REPAIR & MAINTENANCE SUPPLIES	
	CREDIT CARD PMT NO. - 70003787	644.68
TYLER AND FELICITY COOPMAN	REFUNDS	
4007 N UPRIVER BEND LN	CHECK NO. - 00623382	369.35
UNITED RENTALS NW INC	CONSTRUCTION OF FIXED ASSETS	
	CHECK NO. - 00623518	657.87
UNITED RENTALS NW INC	OPERATING RENTALS/LEASES	
	CHECK NO. - 00623391	978.82
VAN NESS FELDMAN LLP	CONTRACTUAL SERVICES	
	ACH PMT NO. - 80158553	8,382.00
W W GRAINGER INC	CONSTRUCTION OF FIXED ASSETS	
DBA GRAINGER	ACH PMT NO. - 80158572	567.71
W W GRAINGER INC	MINOR EQUIPMENT	
DBA GRAINGER	ACH PMT NO. - 80158449	202.46
W W GRAINGER INC	OPERATING SUPPLIES	

DBA GRAINGER	ACH PMT NO. - 80158413	363.68
W W GRAINGER INC	REPAIR & MAINTENANCE SUPPLIES	
DBA GRAINGER	ACH PMT NO. - 80158572	178.15
WA STATE DEPT OF ECOLOGY	PERMITS/OTHER FEES	
	ACH PMT NO. - 80158602	13,330.35
WATER DEPARTMENT	PERMITS/OTHER FEES	
IMPREST FUND	CHECK NO. - 00623393	327.00
WILLIAM COPELAND	REFUNDS	
3505 N C ST	CHECK NO. - 00623384	2,728.23
WINDERMERE LEASE SOURCE	REFUNDS	
102 E BALDWIN AVE	CHECK NO. - 00623385	265.63
	TOTAL FOR 4100 - WATER & HYDROELECTRIC SERVICES	139,399.17

4250 - INTEGRATED CAPITAL MANAGEMENT

GENERAL INDUSTRIES INC	CONSTRUCTION OF FIXED ASSETS	
	ACH PMT NO. - 80158541	90,372.43
HABITAT FOR HUMANITY SPOKANE	CONTRACTUAL SERVICES	
	ACH PMT NO. - 80158542	221,471.33

PROCESSING OF VOUCHERS RESULTS IN CLAIMS AS FOLLOWS:

	TOTAL FOR 4250 - INTEGRATED CAPITAL MANAGEMENT	311,843.76

4310 - SEWER MAINTENANCE DIVISION

PS2 GROUP LLC	PRINTING/BINDING/REPRO	
	ACH PMT NO. - 80158456	73.18
SPOKANE ENVELOPE LLC	PRINTING/BINDING/REPRO	
DBA ALLIED ENVELOPE	ACH PMT NO. - 80158472	175.21
	TOTAL FOR 4310 - SEWER MAINTENANCE DIVISION	248.39

4320 - RIVERSIDE PARK RECLAMATION FAC

ALS LABORATORY GROUP	TESTING SERVICES	
	ACH PMT NO. - 80158516	130.00
BECKWITH & KUFFEL INC DBA	REPAIR & MAINTENANCE SUPPLIES	
GRANICH ENGINEERED PRODUCTS	ACH PMT NO. - 80158573	1,460.90
COLEMAN OIL COMPANY LLC	MOTOR FUEL-OUTSIDE VENDOR	

	ACH PMT NO. - 80158527	6,839.64
COMCAST	IT/DATA SERVICES	
	CHECK NO. - 00623472	234.34
COPIERS NORTHWEST INC	OPERATING RENTALS/LEASES	
	ACH PMT NO. - 80158478	1,621.89
CRANETECH INC	EQUIPMENT REPAIRS/MAINTENANCE	
	ACH PMT NO. - 80158559	15,054.62
ENDRESS+HAUSER INC	REPAIR & MAINTENANCE SUPPLIES	
C/O FIELD INSTRUMENTS & CONTRO	CREDIT CARD PMT NO. - 70003781	17,350.85
EUROFINS ENVIRONMENT TESTING	TESTING SERVICES	
NORTHWEST LLC	ACH PMT NO. - 80158566	497.50
EVOQUA WATER TECHNOLOGIES LLC	EQUIPMENT REPAIRS/MAINTENANCE	
	ACH PMT NO. - 80158482	710.13
FISHER SCIENTIFIC	OPERATING SUPPLIES	
	ACH PMT NO. - 80158570	1,703.99
H D FOWLER COMPANY	REPAIR & MAINTENANCE SUPPLIES	
	ACH PMT NO. - 80158575	678.72
HARRINGTON INDUSTRIAL PLASTICS	REPAIR & MAINTENANCE SUPPLIES	
LLC	CREDIT CARD PMT NO. - 70003783	948.35
HASA INC	CHEMICAL/LAB SUPPLIES	
	ACH PMT NO. - 80158576	30,847.51
OXARC LLC	CHEMICAL/LAB SUPPLIES	
	ACH PMT NO. - 80158586	3,310.50

PROCESSING OF VOUCHERS RESULTS IN CLAIMS AS FOLLOWS:

SPOKANE TRAFFIC CONTROL INC	MISC SERVICES/CHARGES	
	CHECK NO. - 00623516	975.00
W W GRAINGER INC	OPERATING SUPPLIES	
DBA GRAINGER	ACH PMT NO. - 80158572	651.23
WASTE MANAGEMENT OF WA DBA	UTIL GARBAGE/WASTE REMOVAL	
GRAHAM ROAD LANDFILL	CHECK NO. - 00623519	1,115.85
WHITNEY EQUIPMENT COMPANY LLC	REPAIR & MAINTENANCE SUPPLIES	
	ACH PMT NO. - 80158604	36,713.82

TOTAL FOR 4320 - RIVERSIDE PARK RECLAMATION FAC		120,844.84

4330 - STORMWATER

PROPAGANDA CREATIVE LLC	CONTRACTUAL SERVICES	

	ACH PMT NO. - 80158455	7,882.48
TOTAL FOR 4330 - STORMWATER		7,882.48

4490 - SOLID WASTE DISPOSAL

ACRANET CBS BRANCH/DIV OF CBS REPORTING INC	BACKGROUND CHECKS ACH PMT NO. - 80158440	54.55
AIRGAS SPECIALTY PRODUCTS INC	CHEMICAL/LAB SUPPLIES CHECK NO. - 00623351	51,023.58
AMERICAN ALLOY LLC	REPAIR & MAINTENANCE SUPPLIES CHECK NO. - 00623465	849.46
ANDRITZ INC DBA DIAMOND POWER	REPAIR & MAINTENANCE SUPPLIES ACH PMT NO. - 80158406	204.41
APPLIED INDUSTRIAL TECHNOLOGIES	REPAIR & MAINTENANCE SUPPLIES ACH PMT NO. - 80158519	975.52
AT&T MOBILITY	CELL PHONE CHECK NO. - 00623466	552.49
BANNER FURNACE & FUEL	OPERATING SUPPLIES ACH PMT NO. - 80158522	337.77
BEARING DISTRIBUTORS INC dba BROWN BEARING	REPAIR & MAINTENANCE SUPPLIES ACH PMT NO. - 80158523	516.21
CONTROL FACTORS - SEATTLE INC	REPAIR & MAINTENANCE SUPPLIES ACH PMT NO. - 80158400	1,363.75
COPIERS NORTHWEST INC	OPERATING RENTALS/LEASES ACH PMT NO. - 80158532	379.69
DYKMAN ELECTRIC INC	REPAIR & MAINTENANCE SUPPLIES ACH PMT NO. - 80158407	19,058.65

PROCESSING OF VOUCHERS RESULTS IN CLAIMS AS FOLLOWS:

ECOCHEM ANALYTICS INC	CONTRACTUAL SERVICES ACH PMT NO. - 80158408	359.30
ELJAY OIL CO INC	LUBRICANTS CREDIT CARD PMT NO. - 70003767	1,317.13
ELJAY OIL CO INC	MOTOR FUEL-OUTSIDE VENDOR CREDIT CARD PMT NO. - 70003780	8,664.24
FASTENAL CO	OPERATING SUPPLIES ACH PMT NO. - 80158568	1,973.76
FASTENAL CO	PERSONAL PROTECTIVE EQUIPMENT	

	ACH PMT NO. - 80158568	3,076.80
FASTENAL CO	REPAIR & MAINTENANCE SUPPLIES	
	ACH PMT NO. - 80158568	765.35
FINLEY BUTTES LIMITED PARTNERSHIP DBA FINLEY BUTTES	CONTRACTUAL SERVICES ACH PMT NO. - 80158410	172,583.99
FIRE SYSTEMS WEST INC	EQUIPMENT REPAIRS/MAINTENANCE	
	ACH PMT NO. - 80158411	338.21
FLUID CONTROLS & COMPONENTS INC DBA DUPILL GROUP	REPAIR & MAINTENANCE SUPPLIES ACH PMT NO. - 80158571	3,113.24
FOLSOM INDUSTRIES INC dba FOLSOM MFG INC	REPAIR & MAINTENANCE SUPPLIES ACH PMT NO. - 80158412	4,200.35
GORLEY LOGISTICS LLC dba FIKES NORTHWEST	OPERATING SUPPLIES ACH PMT NO. - 80158569	8.75
GRAYMAR ENVIRONMENTAL SERVICES INC	HAZARDOUS WASTE DISPOSAL ACH PMT NO. - 80158574	412.40
GREGORY LAFRENZ	NON-TRAVEL MEALS/LGHT RFRSHMT	
	ACH PMT NO. - 80158606	64.80
INDUSTRIAL SERVICE SOLUTIONS LLC	REPAIR & MAINTENANCE SUPPLIES ACH PMT NO. - 80158414	7,587.91
LSB CONSULTING ENGINEERS PLLC	PROFESSIONAL SERVICES	
	ACH PMT NO. - 80158416	3,140.50
MBI CONSTRUCTION SERVICES INC	REPAIR & MAINTENANCE SUPPLIES	
	ACH PMT NO. - 80158582	5,776.85
NALCO CO	CHEMICAL/LAB SUPPLIES	
	ACH PMT NO. - 80158417	4,217.26
NORCO INC	CHEMICAL/LAB SUPPLIES	
	CREDIT CARD PMT NO. - 70003785	194.97
NORCO INC	OPERATING RENTALS/LEASES	
	CREDIT CARD PMT NO. - 70003785	430.93
NORCO INC	REPAIR & MAINTENANCE SUPPLIES	
	CREDIT CARD PMT NO. - 70003768	1,703.71

PROCESSING OF VOUCHERS RESULTS IN CLAIMS AS FOLLOWS:

NORFOLK IRON & METAL CO DBA CDA METALS	REPAIR & MAINTENANCE SUPPLIES CHECK NO. - 00623352	1,299.36
NORLIFT INC	REGISTRATION/SCHOOLING	
	ACH PMT NO. - 80158418	1,063.73
NORTHSTAR CHEMICAL INC	CHEMICAL/LAB SUPPLIES	

	ACH PMT NO. - 80158419	4,528.78
OAK HARBOR FREIGHT LINES INC	POSTAGE	
	CHECK NO. - 00623509	180.88
OLYMPIC FOUNDRY INC	REPAIR & MAINTENANCE SUPPLIES	
	ACH PMT NO. - 80158420	2,727.50
ONLINE CLEANING SERVICES	EQUIPMENT REPAIRS/MAINTENANCE	
	ACH PMT NO. - 80158421	11,324.58
ORKIN	PROFESSIONAL SERVICES	
	CHECK NO. - 00623513	247.38
OXARC LLC	CHEMICAL/LAB SUPPLIES	
	ACH PMT NO. - 80158586	4,595.18
PETE LIEN & SONS INC	CHEMICAL/LAB SUPPLIES	
	ACH PMT NO. - 80158587	48,950.92
PETE LIEN & SONS INC	OPERATING RENTALS/LEASES	
	ACH PMT NO. - 80158587	1,418.30
POCLINK TECH LLC	MINOR EQUIPMENT	
	ACH PMT NO. - 80158454	9,171.67
SAFETY KLEEN CORPORATION	OPERATING SUPPLIES	
	ACH PMT NO. - 80158591	759.34
SPOKANE HOUSE OF HOSE INC	REPAIR & MAINTENANCE SUPPLIES	
	CREDIT CARD PMT NO. - 70003786	381.76
SPOKANE INT'L AIRPORT	OPERATING RENTALS/LEASES	
	ACH PMT NO. - 80158428	435.60
SPRING ENVIRONMENTAL INC	REGISTRATION/SCHOOLING	
	ACH PMT NO. - 80158430	250.93
VALMET INC	REPAIR & MAINTENANCE SUPPLIES	
C/O BANK OF AMERICA	CHECK NO. - 00623366	16,946.51
VERIZON WIRELESS	CELL PHONE	
	ACH PMT NO. - 80158600	514.69
W W GRAINGER INC	MINOR EQUIPMENT	
DBA GRAINGER	ACH PMT NO. - 80158572	1,054.48
W W GRAINGER INC	OPERATING SUPPLIES	
DBA GRAINGER	ACH PMT NO. - 80158572	1,012.64
W W GRAINGER INC	PERSONAL PROTECTIVE EQUIPMENT	
DBA GRAINGER	ACH PMT NO. - 80158572	651.39

PROCESSING OF VOUCHERS RESULTS IN CLAIMS AS FOLLOWS:

W W GRAINGER INC	REPAIR & MAINTENANCE SUPPLIES	

DBA GRAINGER	ACH PMT NO. - 80158572	1,737.84
WASHINGTON EQUIPMENT MANUFACTURING CO INC	EQUIPMENT REPAIRS/MAINTENANCE ACH PMT NO. - 80158433	24,828.02
WASHINGTON EQUIPMENT MANUFACTURING CO INC	REPAIR & MAINTENANCE SUPPLIES ACH PMT NO. - 80158433	131.90
WATERCO OF THE PACIFIC NORTH WEST, INC	OPERATING SUPPLIES CHECK NO. - 00623481	93.78
TOTAL FOR 4490 - SOLID WASTE DISPOSAL		429,553.69

4500 - SOLID WASTE COLLECTION

NATIONAL COLOR GRAPHICS INC	PRINTING/BINDING/REPRO CREDIT CARD PMT NO. - 70003771	2,547.49
SENSKE PEST CONTROL SENSKE LAWN & TREE CARE	LANDSCAPE/GROUNDS MAINT ACH PMT NO. - 80158425	634.98
SPOKANE PRO CARE INC	CONTRACTUAL SERVICES ACH PMT NO. - 80158429	463.68
TOTAL FOR 4500 - SOLID WASTE COLLECTION		3,646.15

4530 - SOLID WASTE LANDFILLS

NORCO INC	OPERATING RENTALS/LEASES CREDIT CARD PMT NO. - 70003785	350.05
VERIZON WIRELESS	CELL PHONE ACH PMT NO. - 80158600	80.04
TOTAL FOR 4530 - SOLID WASTE LANDFILLS		430.09

4700 - DEVELOPMENT SERVICES

BARTLETT ROOFING 12409 MIRABEAU PKWY STE 300	PERMIT REFUNDS PAYABLE CHECK NO. - 00623474	576.05
CLARION ASSOCIATES LLC	CONTRACTUAL SERVICES ACH PMT NO. - 80158526	31,838.13
HOME EXCELLENCE 3508 E 23RD AVE	PERMIT REFUNDS PAYABLE CHECK NO. - 00623483	1,300.00
KODIAK GENERAL CONTRACTING PO BOX 11742	PERMIT REFUNDS PAYABLE CHECK NO. - 00623485	289.32
LENNAR NW LLC 33820 WEYERHAEUSER WAY S	PERMIT REFUNDS PAYABLE CHECK NO. - 00623507	3,900.00

PROCESSING OF VOUCHERS RESULTS IN CLAIMS AS FOLLOWS:

MELINDA STOOPS 1429 S ADAMS ST	PERMIT REFUNDS PAYABLE CHECK NO. - 00623508	26.50
PS2 GROUP LLC	PRINTING/BINDING/REPRO ACH PMT NO. - 80158456	73.18
TOTAL FOR 4700 - DEVELOPMENT SERVICES		38,003.18

5100 - FLEET SERVICES FUND

COLEMAN OIL COMPANY LLC	MOTOR FUEL-OUTSIDE VENDOR ACH PMT NO. - 80158477	110,730.07
FLEET PAINTING INC	EQUIPMENT REPAIRS/MAINTENANCE ACH PMT NO. - 80158485	1,636.50
JEFF L ROGERS DBA JEFFS CUSTOM AUTO DETAIL	EQUIPMENT REPAIRS/MAINTENANCE ACH PMT NO. - 80158488	294.51
POMP'S TIRE SERVICE INC	EQUIPMENT REPAIRS/MAINTENANCE ACH PMT NO. - 80158496	8,121.19
POMP'S TIRE SERVICE INC	VEHICLE REPAIR & MAINT SUPPLY ACH PMT NO. - 80158423	19,043.58
PRORATE AND FUEL TAX DEPT OF LICENSING	MOTOR FUEL-OUTSIDE VENDOR CHECK NO. - 00623404	361.13
VERIZON WIRELESS	CELL PHONE ACH PMT NO. - 80158509	42.88
WATERCO OF THE PACIFIC NORTH WEST, INC	OPERATING SUPPLIES CHECK NO. - 00623353	29.84
WESTSIDE MOTORSPORTS	EQUIPMENT REPAIRS/MAINTENANCE ACH PMT NO. - 80158512	1,293.72
TOTAL FOR 5100 - FLEET SERVICES FUND		141,553.42

5200 - PUBLIC WORKS AND UTILITIES

CRITTER CONTROL OF GREATER SPOKANE	CONTRACTUAL SERVICES ACH PMT NO. - 80158534	997.16
TOTAL FOR 5200 - PUBLIC WORKS AND UTILITIES		997.16

5300 - IT FUND

AT&T MOBILITY	CELL PHONE	

	CHECK NO. - 00623397	794.85
CAMTEK INC	ALARM/SECURITY SERVICES	
	ACH PMT NO. - 80158398	6,676.92

PROCESSING OF VOUCHERS RESULTS IN CLAIMS AS FOLLOWS:

COMPUNET INC	HARDWARE MAINTENANCE	
LB 410802	ACH PMT NO. - 80158399	4,991.33
COPIERS NORTHWEST INC	OPERATING RENTALS/LEASES	
	ACH PMT NO. - 80158478	6,223.87
LEVEL 3 FINANCING INC	TELEPHONE	
DBA LEVEL 3 COMMUNICATIONS LLC	CHECK NO. - 00623401	4,054.10
RIVER PARK SQUARE LLC	PARKING/TOLLS (LOCAL)	
	ACH PMT NO. - 80158424	1,000.00
VERIZON WIRELESS	CELL PHONE	
	ACH PMT NO. - 80158509	40.01
	TOTAL FOR 5300 - IT FUND	23,781.08

5310 - IT CAPITAL REPLACEMENT FUND

COMPUNET INC	COMPUTER/MICRO EQUIPMENT	
LB 410802	ACH PMT NO. - 80158530	15,721.62
	TOTAL FOR 5310 - IT CAPITAL REPLACEMENT FUND	15,721.62

5500 - PURCHASING AND CONTRACTS

AT&T MOBILITY	CELL PHONE	
	CHECK NO. - 00623397	67.19
	TOTAL FOR 5500 - PURCHASING AND CONTRACTS	67.19

5600 - ACCOUNTING SERVICES

ACRANET CBS BRANCH/DIV OF	BACKGROUND CHECKS	
CBS REPORTING INC	ACH PMT NO. - 80158440	42.55
	TOTAL FOR 5600 - ACCOUNTING SERVICES	42.55

5750 - OFFICE OF PERFORMANCE MGMT

AT&T MOBILITY	CELL PHONE	

	CHECK NO. - 00623466	192.40
TOTAL FOR 5750 - OFFICE OF PERFORMANCE MGMT		192.40

5800 - RISK MANAGEMENT FUND

AT&T MOBILITY	CELL PHONE	
	CHECK NO. - 00623397	38.48

PROCESSING OF VOUCHERS RESULTS IN CLAIMS AS FOLLOWS:

DAVIES CLAIMS SOLUTIONS LLC	INSURANCE ADMINISTRATION	
	ACH PMT NO. - 80158403	23,886.10
TOTAL FOR 5800 - RISK MANAGEMENT FUND		23,924.58

5810 - WORKERS' COMPENSATION FUND

DATA DIMENSIONS LLC	INSURANCE ADMINISTRATION	
	ACH PMT NO. - 80158402	309.00
DEVRIES INFORMATION MANAGEMENT	CONTRACTUAL SERVICES	
	ACH PMT NO. - 80158480	51.12
OCCUPATIONAL HEALTH SOLUTIONS INC	PROFESSIONAL SERVICES	
	ACH PMT NO. - 80158493	2,902.50
VICTOR J GIAMPIETRI II DBA WA STATE FIRST AID	CONTRACTUAL SERVICES	
	ACH PMT NO. - 80158432	1,527.40
TOTAL FOR 5810 - WORKERS' COMPENSATION FUND		4,790.02

5830 - EMPLOYEES BENEFITS FUND

DEER OAKS EAP SERVICES LLC DBA ALLONE HEALTH	PROFESSIONAL SERVICES	
	ACH PMT NO. - 80158404	4,972.00
DELTA DENTAL OF WASHINGTON	INSURANCE CLAIMS	
	ACH PMT NO. - 80158562	64,361.57
KAISER FOUNDATION HEALTH PLAN OF WASHINGTON	INSURANCE CLAIMS	
	ACH PMT NO. - 80158578	100,963.03
LIFEWISE ASSURANCE CO	INSURANCE PREMIUMS	
	ACH PMT NO. - 80158451	36,697.88
PREMERA BLUE CROSS OR SPOKANE CITY TREASURER	INSURANCE CLAIMS	
	ACH PMT NO. - 80158497	971,343.52
PREMERA BLUE CROSS OR	OTHER GENERAL MISC REVENUE	

SPOKANE CITY TREASURER	ACH PMT NO. - 80158497	535,293.11-
	TOTAL FOR 5830 - EMPLOYEES BENEFITS FUND	643,044.89

5900 - FACILITIES MANAGEMENT FUND OPS

AVISTA CORPORATION	UTILITY NATURAL GAS ACH PMT NO. - 80158442	75.20
CAMTEK INC	BUILDING REPAIRS/MAINTENANCE ACH PMT NO. - 80158476	703.71
NIKKI HANSHAW	LOCAL MILEAGE ACH PMT NO. - 80158465	66.50

PROCESSING OF VOUCHERS RESULTS IN CLAIMS AS FOLLOWS:

	TOTAL FOR 5900 - FACILITIES MANAGEMENT FUND OPS	845.41

5901 - ASSET MANAGEMENT FUND CAPITAL

HONEYWELL INTL FIRE/VIDEO/ ACCESS	COMMUNICATIONS EQUIPMENT CHECK NO. - 00623373	17,159.34
RUSS BASSETT CORP	COMMUNICATIONS EQUIPMENT ACH PMT NO. - 80158458	568,583.80
	TOTAL FOR 5901 - ASSET MANAGEMENT FUND CAPITAL	585,743.14

5903 - PROPERTY ACQUISITION FIRE

MAINTENANCE GLOBAL SERVICES LLC	DATA PROCESS EQUIP ACH PMT NO. - 80158581	2,111.09
	TOTAL FOR 5903 - PROPERTY ACQUISITION FIRE	2,111.09

6200 - FIREFIGHTERS' PENSION FUND

ANDREW PILLE	SERVICE REIMBURSEMENT ACH PMT NO. - 80158468	8,411.74
BROOKDALE SENIOR LIVING COMMUNITIES INC	SERVICE REIMBURSEMENT CHECK NO. - 00623369	24,061.00
DELTA DENTAL OF WASHINGTON	SERVICE REIMBURSEMENT ACH PMT NO. - 80158562	1,647.00
GALEN PETERSON	SERVICE REIMBURSMENT	

	ACH PMT NO. - 80158467	349.00
LIFEWISE ASSURANCE CO	INSURANCE ADMINISTRATION	
	ACH PMT NO. - 80158451	3,534.64
PREMERA BLUE CROSS OR	OTHER GENERAL MISC REVENUE	
SPOKANE CITY TREASURER	ACH PMT NO. - 80158497	56,225.39-
PREMERA BLUE CROSS OR	SERVICE REIMBURSEMENT	
SPOKANE CITY TREASURER	ACH PMT NO. - 80158497	73,170.45
RHONALD HOLM	SERVICE REIMBURSMENT	
	ACH PMT NO. - 80158466	126.28
TED L RAIL	SERVICE REIMBURSMENT	
	ACH PMT NO. - 80158469	499.00
TOTAL FOR 6200 - FIREFIGHTERS' PENSION FUND		55,573.72

6255 - LAW ENFORCEMENT RECORDS MGMT

PROCESSING OF VOUCHERS RESULTS IN CLAIMS AS FOLLOWS:

SPOKANE COUNTY TREASURER	DEPOSIT-COUNTY	
	ACH PMT NO. - 80158595	266.50
TOTAL FOR 6255 - LAW ENFORCEMENT RECORDS MGMT		266.50

6300 - POLICE PENSION

DELTA DENTAL OF WASHINGTON	SERVICE REIMBURSEMENT	
	ACH PMT NO. - 80158562	2,158.60
EVERGREEN FOUNTAINS LLC	SERVICE REIMBURSEMENT	
	CHECK NO. - 00623372	6,717.00
FAIRFIELD CARE	OTHER TRANSPORTATION EXPENSES	
DBA PALOUSE COUNTRY ASSISTED	ACH PMT NO. - 80158446	180.00
FAIRFIELD CARE	SERVICE REIMBURSEMENT	
DBA PALOUSE COUNTRY ASSISTED	ACH PMT NO. - 80158446	7,293.00
JACK TEIGEN	SERVICE REIMBURSEMENT	
	ACH PMT NO. - 80158471	6,499.00
LIFEWISE ASSURANCE CO	INSURANCE ADMINISTRATION	
	ACH PMT NO. - 80158451	2,780.93
TERRY CARE GROUP LLC	SERVICE REIMBURSEMENT	
dba MURANO SENIOR LIVING	CHECK NO. - 00623390	10,216.00
WILLIAM SCHERES	SERVICE REIMBURSMENT	

ACH PMT NO. - 80158470	409.18
TOTAL FOR 6300 - POLICE PENSION	36,253.71
TOTAL CLAIMS	4,086,887.83

CHECK #	VENDOR	CITY	LIBRARY	PARKS
	USE TAX AMOUNTS		32.91	17.40
00623351	AIRGAS SPECIALTY PRODUCTS IN	51,023.58		
00623352	NORFOLK IRON & METAL CO	1,299.36		
00623353	WATERCO OF THE PACIFIC NORTH	29.84		
00623354	CHRISTIE WEINSTEIN	182.58		
00623355	ESTATE OF WILLIAM BLAKE STRO	119.74		
00623356	JUDITH E THOMAS	172.44		
00623357	PATRICIA GILLOGLY	1,380.56		
00623358	R.C. SCHWARTZ & ASSOCIATES I	710.66		
00623359	ROBERT MAERZ	150.98		
00623360	THOMAS CAFERRO	190.31		
00623361	ANDREW CHIAVARAS	405.96		
00623362	STEVEN AUSTIN	506.28		
00623363	DENNIS SCHAFER	295.00		
00623364	SAMUEL DOUGAN	526.90		
00623365	JUSTIN HENSLEY	467.00		
00623366	VALMET INC	16,946.51		
00623367	AT&T MOBILITY	1,734.75		
00623368	BROOKDALE SENIOR LIVING	13,317.00		
00623369	BROOKDALE SENIOR LIVING	10,744.00		
00623370	SPENCER CLOUSE	363.00		
00623371	CONCEPT DEVELOPMENT CORP	11,584.60		
00623372	EVERGREEN FOUNTAINS LLC	6,717.00		
00623373	HONEYWELL INTL FIRE/VIDEO/	17,159.34		
00623374	JO L JACKSON	136.00		
00623375	ABC SUPPLY CO INC	203.05		
00623376	COLETTE BROWN	419.52		
00623377	JEANETTE HARDWICK	174.91		
00623378	KRISTI HUNZIKER	34.88		
00623379	R.C. SCHWARTZ & ASSOCIATES I	565.50		
00623380	RENEE MAIN	134.80		
00623381	TANNER REISENAUER	170.52		
00623382	TYLER AND FELICITY COOPMAN	369.35		
00623383	WILLIAM COPELAND	1,433.52		
00623384	WILLIAM COPELAND	1,294.71		
00623385	WINDERMERE LEASE SOURCE	265.63		
00623386	LINDE GAS & EQUIPMENT INC	599.88		
00623387	JORDAN RUPLEY	363.00		
00623388	SPOKANE COUNTY LIBRARY	55,387.73		
00623389	SPOKANE REGIONAL CLEAN AIR	5,262.00		
00623390	TERRY CARE GROUP LLC	10,216.00		
00623391	UNITED RENTALS NW INC	1,957.64		
00623392	WASHINGTON LEOFF	9,277.39		
00623393	WATER DEPARTMENT	327.00		
00623394	W M SMITH & ASSOCIATES INC			5,572.47
00623395	WA STATE DEPT OF LABOR &			79.50
00623396	ACTIVE CONSTRUCTION INC	84,400.77		
00623397	AT&T MOBILITY	1,337.11		
00623398	COMCAST	89.95		
00623399	MANAGEMENT ASSOCIATION	500.00		
00623400	LOREN DALE WAY	764.79		
00623401	LEVEL 3 FINANCING INC	4,054.10		
00623402	SAFEGUARD BUSINESS SYSTEMS I	332.43		

CHECK #	VENDOR	CITY	LIBRARY	PARKS
00623403	SPOKANE COUNTY PROSECUTING	1,000.11		
00623404	PRORATE AND FUEL TAX	361.13		
00623405	WALTER E NELSON CO	167.86		
00623406	ARTS & CRAFTS BOOK MFG		327.30	
00623407	BLACKSTONE AUDIO INC		361.63	
00623408	CENTURYLINK		459.09	
00623409	LPM SUPPLY INC		163.65	
00623410	THOMAS BROWN		450.00	
00623411	LIBERTY CIDER		100.00	
00623412	ADRIANA JANOVICH		100.00	
00623413	SPOKANE CITY TREASURER		2,730.22	
00623414	SPOKANE CITY TREASURER		1,313.05	
00623415	SPOKANE CITY TREASURER		922.63	
00623416	SPOKANE CITY TREASURER		1,300.25	
00623417	SPOKANE CITY TREASURER		1,112.57	
00623418	SPOKANE CITY TREASURER		1,206.07	
00623419	SPOKANE CITY TREASURER		928.09	
00623420	OUTDOOR HOME SERVICES HOLDIN		1,107.69	
00623421	T-MOBILE		57.60	
00623422	A TO Z RENTALS			229.11
00623423	CENTURYLINK			155.72
00623424	WATERCO OF THE PACIFIC NORTH			52.99
00623425	TOWN MILLS CRAFT CENTRE INC			1,443.95
00623426	INLAND EMPIRE FIRE PROTECTIO			254.21
00623427	CSWW INC			109.96
00623428	NW SEED & PET INC			272.70
00623429	PARK DEPT IMPREST FUND			54.90
00623430	JEFFREY H PERRY			216.00
00623431	FIRST RESPONDER OUTFITTER IN			771.66
00623432	TJH ENTERPRISES INC			1,573.69
00623433	AT&T MOBILITY	230.88		
00623465	AMERICAN ALLOY LLC	849.46		
00623466	AT&T MOBILITY	744.89		
00623467	CAREER PATH SERVICES	34,053.75		
00623468	CENTURYLINK	274.96		
00623469	COMCAST	206.70		
00623470	COMCAST	207.68		
00623471	COMCAST	192.68		
00623472	COMCAST	234.34		
00623474	BARTLETT ROOFING	576.05		
00623475	LEVY PREMIUM FOODSERVICE LP			1,309.67
00623476	SARA SAUNDERS LASU			672.00
00623477	W M SMITH & ASSOCIATES INC			1,983.90
00623478	SOUTH PERRY TOGETHER	10,000.00		
00623479	POLLYANNE F BIRGE	299.83		
00623480	NORFOLK IRON & METAL CO	3,177.37		
00623481	WATERCO OF THE PACIFIC NORTH	93.78		

00623482	SHANNON DAVIS	184.00
00623483	HOME EXCELLENCE	1,300.00
00623484	KODIAK GENERAL CONTRACTING	150.00
00623485	KODIAK GENERAL CONTRACTING	289.32
00623486	LENNAR NORTHWEST LLC	47.90
00623487	LENNAR NORTHWEST LLC	33.69

CHECK #	VENDOR	CITY	LIBRARY	PARKS
00623488	LENNAR NORTHWEST LLC	43.49		
00623489	LENNAR NORTHWEST LLC	33.38		
00623490	LENNAR NORTHWEST LLC	30.72		
00623491	LENNAR NORTHWEST LLC	92.16		
00623492	LENNAR NORTHWEST LLC	94.31		
00623493	LENNAR NORTHWEST LLC	92.15		
00623494	LENNAR NORTHWEST LLC	89.70		
00623495	LENNAR NORTHWEST LLC	55.11		
00623496	LENNAR NORTHWEST LLC	35.94		
00623497	LENNAR NORTHWEST LLC	32.14		
00623498	LENNAR NORTHWEST LLC	32.22		
00623499	LENNAR NORTHWEST LLC	32.13		
00623500	LENNAR NORTHWEST LLC	99.85		
00623501	LENNAR NORTHWEST LLC	32.54		
00623502	LENNAR NORTHWEST LLC	150.48		
00623503	LENNAR NORTHWEST LLC	93.35		
00623504	LENNAR NORTHWEST LLC	47.48		
00623505	LENNAR NORTHWEST LLC	76.60		
00623506	LENNAR NORTHWEST LLC	32.10		
00623507	LENNAR NW LLC	3,900.00		
00623508	MELINDA STOOPS	26.50		
00623509	OAK HARBOR FREIGHT LINES INC	180.88		
00623510	SHARON OLIVER	184.00		
00623511	PET EMERGENCY CLINIC	508.28		
00623512	POINTE PEST CONTROL	212.75		
00623513	ORKIN	247.38		
00623514	ROMAINE ELECTRIC CORPORATION	1,008.80		
00623515	SPOKANE POLICE DEPARTMENT	98.54		
00623516	SPOKANE TRAFFIC CONTROL INC	975.00		
00623517	SARAH THOMPSON	184.00		
00623518	UNITED RENTALS NW INC	657.87		
00623519	WASTE MANAGEMENT OF WA DBA	1,115.85		
00623520	CUSTOM SHRINK WRAP EXPRESS			3,170.20
00623521	KING COUNTY DIRECTORS ASSN			346,953.45
70003767	ELJAY OIL CO INC	4,384.89		
70003768	NORCO INC	1,703.71		
70003769	CONSOLIDATED SUPPLY CO	12,654.51		
70003770	GALLS LLC	1,966.53		
70003771	NATIONAL COLOR GRAPHICS INC	2,547.49		
70003772	NORCO INC	225.00		
70003773	CDW GOVERNMENT LLC			1,683.09

70003774	CINTAS CORPORATION		38.52		
70003775	HORIZON DISTRIBUTORS			422.94	
70003776	SPOKANE POWER TOOL & HDWE		162.56		
70003777	THOMAS DEAN & HOSKINS INC	9,725.72			
70003778	FOSTER GARVEY PC	247.75			
70003779	GALLS LLC	2,699.50			
70003780	ELJAY OIL CO INC	5,596.48			
70003781	ENDRESS+HAUSER INC	17,350.85			
70003782	GALLS LLC	39,014.50			
70003783	HARRINGTON INDUSTRIAL PLASTI	948.35			
70003784	HUGHES FIRE EQUIPMENT INC	8,581.13			
70003785	NORCO INC	1,351.57			

CHECK #	VENDOR	CITY	LIBRARY	PARKS
70003786	SPOKANE HOUSE OF HOSE INC	381.76		
70003787	TITAN TRUCK EQUIPMENT	644.68		
80158397	BANNER FURNACE & FUEL	193.76		
80158398	CAMTEK INC	6,676.92		
80158399	COMPUNET INC	4,991.33		
80158400	CONTROL FACTORS - SEATTLE IN	1,363.75		
80158401	CORRIDOR CONTRACTORS LLC	572,346.43		
80158402	DATA DIMENSIONS LLC	309.00		
80158403	DAVIES CLAIMS SOLUTIONS LLC	23,886.10		
80158404	DEER OAKS EAP SERVICES LLC	4,972.00		
80158405	DESIMONE CONSULTING LLC	6,666.00		
80158406	ANDRITZ INC	204.41		
80158407	DYKMAN ELECTRIC INC	19,058.65		
80158408	ECOCHEM ANALYTICS INC	359.30		
80158409	FASTENAL CO	1,796.20		
80158410	FINLEY BUTTES LIMITED	172,583.99		
80158411	FIRE SYSTEMS WEST INC	338.21		
80158412	FOLSOM INDUSTRIES INC	4,200.35		
80158413	W W GRAINGER INC	2,084.32		
80158414	INDUSTRIAL SERVICE SOLUTIONS	7,587.91		
80158415	LAZ KARP ASSOCIATES LLC	4,364.00		
80158416	LSB CONSULTING ENGINEERS PLL	3,140.50		
80158417	NALCO CO	4,217.26		
80158418	NORLIFT INC	1,063.73		
80158419	NORTHSTAR CHEMICAL INC	4,528.78		
80158420	OLYMPIC FOUNDRY INC	2,727.50		
80158421	ONLINE CLEANING SERVICES	11,324.58		
80158422	PETE LIEN & SONS INC	35,856.71		
80158423	POMP'S TIRE SERVICE INC	23,964.10		
80158424	RIVER PARK SQUARE LLC	2,800.00		
80158425	SENSKE PEST CONTROL	634.98		
80158426	SPECIALIZED PAVEMENT MARKING	1,580.90		
80158427	SPOKANE COUNTY TREASURER	629.04		
80158428	SPOKANE INT'L AIRPORT	435.60		
80158429	SPOKANE PRO CARE INC	463.68		

80158430	SPRING ENVIRONMENTAL INC	250.93
80158431	VESTIS GROUP INC	19.50
80158432	VICTOR J GIAMPIETRI II	1,527.40
80158433	WASHINGTON EQUIPMENT	24,959.92
80158434	WESTSIDE MOTORSPORTS	646.86
80158435	NICHOLAS ENGLISH	129.00
80158436	ROBERT S LESSER	231.00
80158437	DAVID W RICHARDS	117.00
80158438	DAVID W SINGLEY	117.00
80158439	1ST CHOICE ENVIRONMENTAL	872.00
80158440	ACRANET CBS BRANCH/DIV OF	1,464.12
80158441	ACTION MATERIALS	4,059.09
80158442	AVISTA CORPORATION	75.20
80158443	AVISTA UTILITIES	96.10
80158444	COLUMBIA ENGINEERING GROUP I	23,656.69
80158445	EVERGREEN STATE TOWING LLC	18,237.61
80158446	FAIRFIELD CARE	7,473.00
80158447	FASTENAL CO	1,697.09

CHECK #	VENDOR	CITY	LIBRARY	PARKS
80158448	FRONTIER BEHAVIORAL HEALTH	18,887.97		
80158449	W W GRAINGER INC	1,894.52		
80158450	HYDRAULIC INSTITUTE, INC.	2,440.00		
80158451	LIFEWISE ASSURANCE CO	43,013.45		
80158452	MIA - MUJERES IN ACTION	4,166.00		
80158453	NEPTUNE TECHNOLOGY GROUP INC	15,460.02		
80158454	POCLINK TECH LLC	9,171.67		
80158455	PROPAGANDA CREATIVE LLC	7,882.48		
80158456	PS2 GROUP LLC	1,033.83		
80158457	RIVER PARK SQUARE LLC	200.00		
80158458	RUSS BASSETT CORP	568,583.80		
80158459	SAFETY KLEEN CORPORATION			303.71
80158460	SPOKANE COUNTY FIRE DIST 9	3,319.02		
80158461	UKG KRONOS SYSTEMS LLC	738.88		
80158462	VERIZON WIRELESS	700.20		
80158463	VESTIS GROUP INC	20.46		
80158464	NICHOLAS ENGLISH	102.00		
80158465	NIKKI HANSHAW	66.50		
80158466	RHONALD HOLM	126.28		
80158467	GALEN PETERSON	349.00		
80158468	ANDREW PILLE	8,411.74		
80158469	TED L RAIL	499.00		
80158470	WILLIAM SCHERES	409.18		
80158471	JACK TEIGEN	6,499.00		
80158472	SPOKANE ENVELOPE LLC	175.21		
80158473	CHARLES TABOR	4,790.85		
80158474	AVISTA UTILITIES	2,006.13	11,143.69	
80158475	AXON ENTERPRISE INC			397.21
80158476	CAMTEK INC	703.71		

80158477	COLEMAN OIL COMPANY LLC	110,730.07			
80158478	COPIERS NORTHWEST INC	8,807.60			
80158479	DELL MARKETING LP				362.74
80158480	DEVRIES INFORMATION MANAGEME	134.24			
80158481	DOWL LLC	367.19			
80158482	EVOQUA WATER TECHNOLOGIES LL	710.13			
80158483	BARBARA H POWERS	244.42			
80158484	FASTENAL CO	213.88			335.22
80158485	FLEET PAINTING INC	1,636.50			
80158486	W W GRAINGER INC	216.86			
80158487	INGRAM LIBRARY SERVICES LLC		11,414.54		
80158488	JEFF L ROGERS	294.51			
80158489	KRUEGER SHEET METAL COMPANY	3,798.29			
80158490	MIDWEST TAPE		658.70		
80158491	MOSS GREEN INC				175.98
80158492	NAPA AUTO PARTS				191.21
80158493	OCCUPATIONAL HEALTH SOLUTION	2,902.50			
80158494	OVERDRIVE INC		15,284.78		
80158495	REXEL INC				713.82
80158496	POMP'S TIRE SERVICE INC	3,200.67			
80158497	PREMERA BLUE CROSS OR	452,995.47			
80158498	RIVER PARK SQUARE LLC	780.00			
80158499	JANT GROUP II INC				37.29
80158500	SHAMROCK MANUFACTURING INC	19,444.88			

CHECK #	VENDOR	CITY	LIBRARY	PARKS
80158501	SITEONE LANDSCAPE SUPPLY LLC			1,311.84
80158502	HESTON HARDWARE			109.03
80158503	SPOKANE COUNTY FIRE DIST 10	56,680.17		
80158504	SPOKANE HARDWARE SUPPLY INC		92.81	
80158505	STONEWAY ELECTRIC SUPPLY			709.92
80158506	SUNBELT RENTALS INC			103.88
80158507	TECHNOLOGY UNLIMITED		818.25	
80158508	TK ELEVATOR CORPORATION		5,988.67	
80158509	VERIZON WIRELESS	82.89		
80158510	VERMEER MOUNTAIN WEST INC			823.39
80158511	WESTERN EQUIPMENT DISTRIBUTO			308.00
80158512	WESTSIDE MOTORSPORTS	646.86		
80158513	MIAOLING HUANG		25.84	
80158514	GEORGE PEREZVELEZ	562.08		
80158515	SPOKANE ENVELOPE LLC	144.56		
80158516	ALS LABORATORY GROUP	130.00		
80158517	ALSCO DIVISION OF ALSCO INC			85.62
80158518	AMERICAN TRAFFIC SOLUTIONS I	131,581.23		
80158519	APPLIED INDUSTRIAL	975.52		
80158520	AVIDEX INDUSTRIES LLC	54,850.01		
80158521	AVISTA UTILITIES	36,667.26		
80158522	BANNER FURNACE & FUEL	144.01		
80158523	BEARING DISTRIBUTORS INC	516.21		

80158524	CAMTEK INC	8,255.65		1,161.92
80158525	CHIEF GARRY PARK NEIGHBORHOO	552.87		
80158526	CLARION ASSOCIATES LLC	31,838.13		
80158527	COLEMAN OIL COMPANY LLC	19,754.97		
80158528	COLUMBIA ELECTRIC SUPPLY/DIV	2,000.00		
80158529	COMMUNITY HEALTH ASSOCIATION	84,403.27		
80158530	COMPUNET INC	15,721.62		
80158531	CONSISTENT CARE SUPPORT	20,186.40		
80158532	COPIERS NORTHWEST INC	7,524.88		
80158533	CORE & MAIN LP	11,180.67		
80158534	CRITTER CONTROL OF GREATER	997.16		
80158535	DELTA DENTAL OF WASHINGTON	35,962.83		
80158536	DEVRIES INFORMATION MANAGEME			18.50
80158537	ELECTRONIC DATA COLLECTION	24,896.96		
80158538	ENGINEERING ECONOMICS INC	1,075.50		
80158539	ENVIRONMENT CONTROL OF SPOKA	7,360.00		
80158540	EVERGREEN STATE TOWING LLC	7,358.58		
80158541	GENERAL INDUSTRIES INC	90,372.43		
80158542	HABITAT FOR HUMANITY SPOKANE	221,471.33		
80158543	INNOVIA FOUNDATION	176,026.96		
80158544	JEWELS HELPING HANDS	4,500.00		
80158545	KITTELSON & ASSOCIATES INC	122,874.84		
80158546	KXLY	3,498.50		
80158547	MOORE IACOFANO GOLTSMAN INC	2,721.10		
80158548	PACIFIC EDUCATION INSTITUTE			329.64
80158549	LEPS-PSS PLLC DBA	1,560.00		
80158550	SPOKANE NEIGHBORHOOD ACTION	39,053.25		
80158551	CHESTER JOHN CASKEY			1,071.00
80158552	US BANK	20,615.00		
80158553	VAN NESS FELDMAN LLP	8,382.00		

CHECK #	VENDOR	CITY	LIBRARY	PARKS
80158554	WEST CENTRAL COMMUNITY			6,056.25
80158555	YWCA	1,222.41		
80158556	AVIDEX INDUSTRIES LLC	14,976.85		
80158557	COLEMAN OIL COMPANY LLC			4,610.56
80158558	STEVE CONNER			4,301.04
80158559	CRANETECH INC	15,054.62		
80158560	CREEK AT QUALCHAN GOLF COURS			3,220.15
80158561	L N CURTIS & SONS	2,343.78		
80158562	DELTA DENTAL OF WASHINGTON	32,204.34		
80158563	DEVRIES INFORMATION MANAGEME	576.00		
80158564	DP NICOLI INC	654.42		
80158565	ECO COUNTER INC	1,565.59		
80158566	EUROFINS ENVIRONMENT TESTING	497.50		
80158567	FAHLO LLC			2,274.00
80158568	FASTENAL CO	5,220.65		
80158569	GORLEY LOGISTICS LLC	8.75		
80158570	FISHER SCIENTIFIC	1,703.99		

80158571	FLUID CONTROLS & COMPONENTS	3,113.24		
80158572	W W GRAINGER INC	4,132.80		437.44
80158573	BECKWITH & KUFFEL INC DBA	1,460.90		
80158574	GRAYMAR ENVIRONMENTAL SERVIC	412.40		
80158575	H D FOWLER COMPANY	19,020.61		
80158576	HASA INC	30,847.51		
80158577	HEALTHCALL LLC	1,309.20		
80158578	KAISER FOUNDATION HEALTH PLA	100,963.03		
80158579	KENWORTH SALES COMPANY	1,147.80		
80158580	LIFE ASSIST INC	4,289.27		
80158581	MAINTENANCE GLOBAL SERVICES	2,111.09		
80158582	MBI CONSTRUCTION SERVICES IN	5,776.85		
80158583	NAPA AUTO PARTS	1,828.22		180.84
80158584	NEPTUNE TECHNOLOGY GROUP INC	16,430.46		
80158585	NORTH COUNTRY SERVICES LLC	3,319.04		
80158586	OXARC LLC	7,905.68		
80158587	PETE LIEN & SONS INC	14,512.51		
80158588	REXEL INC			3,875.52
80158589	POMP'S TIRE SERVICE INC	665.51		
80158590	PS2 GROUP LLC	168.17		
80158591	SAFETY KLEEN CORPORATION	759.34		
80158592	SAN DIEGO POLICE EQUIPMENT	7,475.97		
80158593	SANDBAGGERS CLUB LLC			4,419.39
80158594	SHERWIN WILLIAMS CO	68.02		
80158595	SPOKANE COUNTY TREASURER	1,283.40		
80158596	SPOKANE FIRE STATION MUSEUM	2,400.00		
80158597	STERICYCLE INC	1,420.50		
80158598	SUNBELT RENTALS INC			2,709.81
80158599	T & T GOLF MANAGEMENT INC			8,579.10
80158600	VERIZON WIRELESS	594.73		
80158601	VESTIS GROUP INC	29.59		
80158602	WA STATE DEPT OF ECOLOGY	13,330.35		
80158603	WESTERN EQUIPMENT DISTRIBUTO			1,619.88
80158604	WHITNEY EQUIPMENT COMPANY LL	36,713.82		
80158605	KATHLEEN J ARMSTRONG	117.00		
80158606	GREGORY LAFRENZ	64.80		

CHECK #	VENDOR	CITY	LIBRARY	PARKS
80158607	STEPHEN SZAMBELAN	184.00		
80158608	RICHARD WALLIS	184.00		
80158609	STEVEN J WOHL	100.92		
		4,425,699.01	58,301.11	417,833.41

CITYWIDE TOTAL: 4,901,833.53

Agenda Sheet for City Council:

Committee: Date: N/A

Committee Agenda type:

Council Meeting Date: 11/18/2026

Date Rec'd	11/10/2026		
Clerk's File #	CPR 2026-0003		
Cross Ref #			
Project #			
Submitting Dept	ACCOUNTING	**Bid #**	
Contact Name/Phone	MATT BOSTON 6028	**Requisition #**	
Contact E-Mail	MBOSTON@SPOKANECITY.ORG		
Agenda Item Type	Claim Item		
Council Sponsor(s)			
Sponsoring at Administrators Request	NO		
Lease? NO	**Grant Related?** NO	**Public Works?** NO	
Agenda Item Name	ACCOUNTING-PAYROLL		

Agenda Wording

Report of the Mayor of pending payroll claims of previously approved obligations through: November 7, 2026. Payroll check #582136 through check #582211 $10,346,305.32

Summary (Background)

Payroll

What impacts would the proposal have on historically excluded communities?

How will data be collected, analyzed, and reported concerning the effect of the program/policy by racial, ethnic, gender identity, national origin, income level, disability, sexual orientation, or other existing disparities?

How will data be collected regarding the effectiveness of this program, policy, or product to ensure it is the right solution?

Describe how this proposal aligns with current City Policies, including the Comprehensive Plan, Sustainability Action Plan, Capital Improvement Program, Neighborhood Master Plans, Council Resolutions, and others?

Council Subcommittee Review

Fiscal Impact	
Approved in Current Year Budget?	
Total Cost	**$**
Current Year Cost	**$**
Subsequent Year(s) Cost	**$**

Narrative

Amount		**Budget Account**
Expense	**$** 10,346,305.32	**#** Various
Select	**$**	**#**
Select	**$**	**#**
Select	**$**	**#**
Select	**$**	**#**
Select	**$**	**#**

Funding Source

Funding Source Type Select

Is this funding source sustainable for future years, months, etc?

Expense Occurrence

Other budget impacts (revenue generating, match requirements, etc.)

Approvals		**Additional Approvals**	
Dept Head	LIPPS, JOSH		
Division Director	STRATTON, JESSICA		
Accounting Manager			
Legal			
For the Mayor			

Distribution List

PAYROLL RECAP BY FUND

PAY PERIOD ENDING NOVEMBER 7, 2026

FUND	FUND NAME	TOTAL
0100	GENERAL FUND	
0030	POLICE OMBUDSMAN	14,073.60
0230	CIVIL SERVICE	50,659.20
0260	CITY CLERK	25,792.03
0320	COUNCIL	49,566.40
0330	PUBLIC AFFAIRS / COMMUNICATIONS	42,753.60
0370	ENGINEERING SERVICES	208,054.74
0380	TRANSPORTATION & SUSTAINABILITY	6,631.20
0410	FINANCE	54,403.52
0450	CD/HS DIVISION	10,400.00
0470	HISTORIC PRESERVATION	12,277.60
0480	OFFICE OF CIVIL RIGHTS,EQUITY, & INCLUSION	14,322.40
0500	LEGAL	184,161.57
0520	MAYOR	44,360.04
0550	NEIGHBORHOOD SERVICES	16,594.40
05601	MUNICIPAL COURT	142,457.77
0570	OFFICE OF HEARING EXAMINER	6,916.80
0580	FAMILY & YOUTH SERVICES	4,081.60
0620	HUMAN RESOURCES	45,160.00
0650	PLANNING SERVICES	56,600.81
0680	POLICE	2,530,868.90
0690	PROBATION SERVICES	91,604.46
0700	PUBLIC DEFENDERS	93,931.99
0750	ECONOMIC DEVELOPMENT	16,495.20
0860	TREASURER	0.00
	TOTAL GENERAL FUND	3,722,167.83

FUND	FUND NAME	TOTAL
1100	STREET	294,228.35
1200	CODE ENFORCEMENT	89,788.77
1300	LIBRARY	310,823.92
1380	TRAFFIC CALMING MEASURES	0.00
1390	URBAN FORESTRY	3,353.60
1400	PARKS AND RECREATION	445,978.71
1430	GRANTS MANAGEMENT	32,820.40
1460	PARKING METER	41,089.80
1510	SPOKANE UNITED 911 NETWORK	212,927.83
1620	PUBLIC SAFETY & JUDICIAL GRANT	6,139.44
1680	CD/HS	54,757.30
1970	EMS FUND	1,948,043.10
4100	WATER	565,368.70
4250	INTEGRATED CAPITAL FUND	82,772.80
4300	SEWER	761,737.99
4480	REFUSE	744,222.07
4600	GOLF	67,459.17
4700	GENERAL SERVICES FUND	234,207.16
5100	FLEET SERVICE	128,865.34
5200	PUBLIC WORKS & UTILITY FUND	66,844.08
5300	MIS	218,186.83
5500	PURCHASING	34,276.01
5600	ACCOUNTING SERVICES	134,968.80
5700	MY SPOKANE	37,474.48
5750	PROJECT MANAGEMENT OFFICE	23,051.20
5800	RISK MANAGEMENT	3,361.60
5810	WORKER'S COMPENSATION	3,792.00
5830	SELF-FUNDED MEDICAL/DENTAL	9,995.24
5900	ASSET MANAGEMENT	52,638.75
6060	CITY RETIREMENT	14,964.05
	TOTAL	10,346,305.32

MINUTES OF SPOKANE CITY COUNCIL

Wednesday, September 2, 2026

LEGISLATIVE SESSION

The Legislative Session of the Spokane City Council held on the above date was called to order at 6:00 p.m. in the Council Chambers in the Lower Level of the Municipal Building, 808 West Spokane Falls Boulevard, Spokane, Washington. A recording of the meeting can be found at the following link: https://vimeo.com/spokanecitycouncil.

Land Acknowledgement
Council President Wilkerson started the meeting by reading the "Land Acknowledgement" (adopted by City Council on March 22, 2021, under Resolution 2021-0019) which appears on page 2 of the agenda packet.

Pledge of Allegiance
The Pledge of Allegiance was led by Council President Wilkerson.

There was no **Poetry at the Podium.**

There were no **Words of Inspiration** or **Special Introductions.**

Roll Call
On roll call, Council President Wilkerson and Council Members Cathcart, Dillon, Dixit, Klitzke (appearing virtually), Telis, and Zappone were present.

Legislative Assistant Jackson Deese; City Council Policy Advisor Chris Wright; and City Clerk Giacobbe Byrd were also present for the meeting.

There were no **Proclamations or Salutations.**

There were no **Reports from Community Organizations.**

EXPRESS TESTIMONY

The Council received public comment in the Express Testimony portion of the meeting.

FINAL HEARINGS

There were **no final hearings.**

PROPOSED LEGISLATIVE ITEMS

The Council received public comment in the Proposed Legislative Items portion of the meeting.

PENDING LEGISLATIVE ITEMS

The City Clerk read the following pending Ordinances and Resolutions by title and further action was deferred:

Emergency Ordinances

ORD C36928 An Ordinance of the City of Spokane to ensure tenant protections during the Spokane Complex Fire and similar emergencies, adopting new sections to Chapter 10.57 of the Spokane Municipal Code, and declaring an emergency. (Council Sponsors: Council Members Dillon, Dixit, and Klitzke)

Special Budget Ordinances

ORD C36929 Amending Ordinance No. C36794, entitled in part, "An Ordinance adopting a mid-biennial modification budget for the City of Spokane", and amending it to accept wildfire relief donations in the H.O.M.E. Starts Here account and provide financial assistance to individuals and families impacted by the Spokane Complex Fires, and declaring an emergency. (Council Sponsors: Council President Wilkerson and Council Member Dillon)

ORD C36930 Amending Ordinance No. C36794, entitled in part, "An Ordinance Adopting a Mid-Biennial Modification Budget for the City Of Spokane", and amending it to increase budget to account for increased claims experience for Risk Management, Workers' Compensation, and Employee Benefits, and declaring an emergency. (Council Sponsors: Council President Wilkerson and Council Member Dillon)

Resolutions

RES 2026-0064 setting forth the City Council's approval of investments from the Opioid Response Fund for culturally responsive treatment services; authorizing execution of related contracts without further City Council review and action. (Council Sponsors: Council Members Telis and Zappone)

ORDINANCES

ORD C36925 relating to micro housing and sewer utility rate; enacting a new section 13.03.1129 to chapter 13 of the Spokane Municipal Code (SMC) and setting an effective date. (Council Sponsors: Council Members Klitzke and Zappone.)

ORD C36926 relating to Utilities, Franchise Taxes; amending Municipal Code section 08.10.040 to chapter 08.10 of the Spokane Municipal Code; and setting an effective date. (Council Sponsors: Council Members Klitzke and Zappone.)

ORD C36927 establishing a Temporary Commercial Activation process to support economic development, expand small-business opportunities, and activate vacant and underutilized commercial spaces, and adopting a new section 17F.040.210 to chapter 17F.040 of the Spokane Municipal Code. (Council Sponsors: Council Members Dixit and Zappone)

FINAL LEGISLTATIVE ITEMS

BOARD AND COMMISSION APPOINTMENTS

There were no board and commission appointments in the final section of the agenda.

REPORTS, CONTRACTS, AND CLAIMS

Upon 7-0 Voice Vote, the City Council **approved** the following reports, contracts, claims, and minutes:

Public Safety and Community Health Committee (PSCHC) (Final)

Public Infrastructure, Environment and Sustainability Committee (PIES) (Final)

Urban Experience Committee (UE) (Final)

OPR 2026-0025 Contract amendment with Cameron Reilly, LLC (Spokane Valley, WA) for a change order for the Boulder Rock Installation and Mow Strip. From June 29, 2026, through August 1, 2026 – $13,555.42 (Plus applicable taxes). (Council Sponsor: Council Member Dillon)

OPR 2026-0722 Conditional Multifamily Tax Exemption contract with Frank Family Investment LLC, (Liberty Lake, WA) for the property located at 1175 W Summit Pkwy, to create 200 dwelling units. Following construction the project intends to finalize under the 8yr exemption. (Council Sponsors: Council Members Dixit and Zappone)

Finance and Administration Committee (F&A) (Final)

Report of the Mayor of Pending:

Pending claims & payments of previously approved obligations through: 08/21/2026. Total $15,877,543.79 with Parks & Library Claims being approved by their respective boards. Claims excluding Parks & Library Total $15,390,848.53. (CPR 2026-0002)

Pending payroll claims of previously approved obligations through: August 15, 2026. Payroll check #581482 through check #581641 - $10,969,741.64. (CPR 2026-0003)

Minutes:

- Legislative Meeting Minutes – August 19, 2026 (CPR 2026-0013)

EMERGENCY ORDINANCES
There were no final emergency ordinances.

SPECIAL BUDGET ORDINANCES
There were no final special budget ordinances.

RESOLUTIONS

RES 2026-0061 (Council Sponsors: Council President Wilkerson and Council Member Dillon)

> **Upon 7-0 Roll Call Vote,** the City Council **adopted RES 2026-0061** granting a non-exclusive access and utility easement across airport property to Inland Power and Light Co. on Spokane County Assessor Parcel No. 15341.9009, 15342.9004, 15345.9010, and 15355.9008. (Council Sponsors: Council Members Klitzke and Zappone)
>
> **Ayes:** Cathcart, Dillon, Dixit, Klitzke, Telis, Wilkerson, and Zappone
> **Nos:** None
> **Abstain:** None
> **Absent:** None

RES 2026-0062 (Council Sponsors: Council President Wilkerson and Council Member Dillon)

> **Upon 7-0 Roll Call Vote,** the City Council **adopted RES 2026-0062** authorizing the Airport Board to purchase property identified as Spokane County Assessor Parcel No. 35014.0111.
>
> **Ayes:** Cathcart, Dillon, Dixit, Klitzke, Telis, Wilkerson, and Zappone
> **Nos:** None
> **Abstain:** None
> **Absent:** None

ORDINANCES

Ordinance C36922 (Council Sponsors: Council President Wilkerson and Council Member Telis)

Upon 7-0 Roll Call Vote, the City Council **passed Ordinance C36922** expanding access to cooling, heating, and weatherization services; amending Sections 07.08.158 and 10.57.10 of the Spokane Municipal Code.

Ayes: Cathcart, Dillon, Dixit, Klitzke, Telis, Wilkerson, and Zappone
Nos: None
Abstain: None
Absent: None

Ordinance C36923 (Council Sponsors: Council President Wilkerson and Council Members Dillon and Dixit)

Upon 7-0 Roll Call Vote, the City Council **passed Ordinance C36923** repealing duplicative charitable solicitation license requirements; amending Section 08.01.080 and repealing Chapter 10.42 of the Spokane Municipal Code.

Ayes: Cathcart, Dillon, Dixit, Klitzke, Telis, Wilkerson, and Zappone
Nos: None
Abstain: None
Absent: None

Ordinance C36920 (Council Sponsors: Council Members Dillon and Klitzke)

Upon 7-0 Roll Call Vote, the City Council **passed Ordinance C36920** to extend the duration of interim zoning ordinance C36646 concerning height limits; setting a public hearing; and reiterating a work program.

Ayes: Cathcart, Dillon, Dixit, Klitzke, Telis, Wilkerson, and Zappone
Nos: None
Abstain: None
Absent: None

Pursuant to Council Rule 2.2 A, the City Clerk left the meeting at 6:41 p.m.

OPEN FORUM

The Council received public comment in the Open Forum portion of the meeting.

ADJOURNMENT
Motion by Council Member Telis, seconded by Council Member Dillon, **to adjourn**; **carried 7-0.**

There being no further business to come before the City Council, the meeting adjourned at 7:07 p.m.

Minutes prepared by City Clerk Giacobbe R. Byrd and submitted for publication in the November 11, 2026, issue of the *Official Gazette*.

Approved by Spokane City Council on November 18, 2026.

_____
Betsy Wilkerson
City Council President

Attest:

_____
Giacobbe R. Byrd
City Clerk

MINUTES OF SPOKANE CITY COUNCIL

Wednesday, September 9, 2026

LEGISLATIVE SESSION

The Legislative Session of the Spokane City Council held on the above date was called to order at 6:02 p.m. in the Council Chambers in the Lower Level of the Municipal Building, 808 West Spokane Falls Boulevard, Spokane, Washington. A recording of the meeting can be found at the following link: https://vimeo.com/spokanecitycouncil.

Land Acknowledgement
Council President Wilkerson started the meeting by reading the "Land Acknowledgement" (adopted by City Council on March 22, 2021, under Resolution 2021-0019) which appears on page 2 of the agenda packet.

Pledge of Allegiance
The Pledge of Allegiance was led by Council President Wilkerson.

There was no **Poetry at the Podium.**

There were no **Words of Inspiration** or **Special Introductions.**

Roll Call
On roll call, Council President Wilkerson and Council Members Cathcart, Dillon, Dixit, Klitzke, Telis, and Zappone were present.

Legislative Assistant Jackson Deese; City Council Policy Advisor Chris Wright; and City Clerk Giacobbe Byrd were also present for the meeting.

Proclamations or Salutations
- Community Care Connection Week – read by Council Member Telis and accepted by representatives from Community Minded Enterprises
- Sandy Williams Day of Service – read by Council President Wilkerson and accepted by representatives from The Black Lens and SCAR

There were no **Reports from Community Organizations.**

EXPRESS TESTIMONY

The Council received no public comment in the Express Testimony portion of the meeting.

FINAL HEARINGS

There were **no final hearings.**

PROPOSED LEGISLATIVE ITEMS

The Council received no public comment in the Proposed Legislative Items portion of the meeting.

PENDING LEGISLATIVE ITEMS

The City Clerk read the following pending Ordinances and Resolutions by title and further action was deferred:

Special Budget Ordinances

ORD C36931 Amending Ordinance No. C36794, entitled in part, "An Ordinance Adopting a Mid-Biennial Modification Budget for the City of Spokane", and amending it to accept and spend a mid-year Smith-Barbieri Progressive Fund grant award, and declaring an emergency. (Council Sponsors: Council Members Telis and Cathcart)

ORD C36932 Amending Ordinance No. C36794, entitled in part, "An Ordinance Adopting a Mid-Biennial Modification Budget for the City Of Spokane", and amending it to account for increased cost and revenue for Basic Law Enforcement Academies (BLEA) for 2026, and declaring an emergency. (Council Sponsors: Council Members Telis and Cathcart)

ORD C36933 Amending Ordinance No. C36794, entitled in part, "An Ordinance Adopting a Mid-Biennial Modification Budget for the City Of Spokane", and amending it to accept a grant award from the Department of Commerce for fiscal year 2027 Domestic Violence High Risk Team Grant Program, and declaring an emergency. (Council Sponsors: Council Members Telis and Cathcart)

ORD C36934 Amending Ordinance No. C36794, entitled in part, "An Ordinance Adopting a Mid-Biennial Modification Budget for the City of Spokane", and amending it to accept a grant award from the Department of Justice for the jointly applied fiscal year 2025 JAG Grant Program with Spokane County, and declaring an emergency. (Council Sponsors: Council Members Telis and Cathcart)

ORD C36935 Amending Ordinance No. C36794, entitled in part, "An Ordinance Adopting a Mid-Biennial Modification Budget for the City of Spokane", and amending it to accept a grant award from the Washington Traffic Safety Commission for outreach and training for Spokane Police Officers, and declaring an emergency. (Council Sponsors: Council Members Telis and Cathcart)

ORD C36936 Amending Ordinance No. C36794, Entitled in Part, "An Ordinance Adopting a Mid-Biennial Modification Budget for the City of Spokane", and amending it to transfer Police Dispatch positions to the Spokane United 911 Network, and declaring an emergency. (Council Sponsors: Council Members Dixit and Zappone)

Resolutions
There were no **pending Resolutions**

ORDINANCES

ORD C36921 Modernizing and streamlining City of Spokane financial funds; repealing Sections 04.31.060, 04.31C.060, and Chapter 07.08; adopting a new Chapter 07.08A; and amending Section 13.04.020 of the Spokane Municipal Code. (Council Sponsors: Council President Wilkerson and Council Member Dillon) (As amended on 09-01-26)

FINAL LEGISLTATIVE ITEMS

BOARD AND COMMISSION APPOINTMENTS

Plan Commission (CPR 1981-0295)
After an opportunity for public comment, with none provided, **upon 7-0 Voice Vote,** the City Council **approved** (and thereby confirmed) the appointment of Lauren Pangborn to the Plan Commission.

Human Rights Commission (CPR 1991-0068)
After an opportunity for public comment, with none provided, **upon 7-0 Voice Vote,** the City Council **approved** (and thereby confirmed) the appointment of Lydea Maynard (Youth Member) to the Human Rights Commission.

REPORTS, CONTRACTS, AND CLAIMS

After an opportunity for public comment, Council Member Cathcart requested that OPR 2021-0722 be taken separately.

Upon 6-1 Voice Vote (Council Member Cathcart voting "No") the City Council **approved** the following item (taken separately):

OPR 2021-0722 Contract Amendment with Summit Law Group, (Seattle, WA) re Bacon, et. al., v. City of Spokane, et. al. This amendment will increase the contract by $265,000 for a contract total of $1,150,000.00. (Council Sponsors: Council President Wilkerson and Council Member Dillon)

Upon 7-0 Voice Vote, the City Council **approved** the following reports, contracts, claims, and minutes:

Public Safety and Community Health Committee (PSCHC) (Final)

OPR 2026-0735 Agreement with the YWCA (Spokane) to assist in funding one full-time domestic violence advocate for $68,541.49 annually, from January 1, 2027, through December 31, 2028, for a total amount not to exceed $137,082.98. (Council Sponsors:

Council President Wilkerson and Council Member Dillon) (Note: This item appeared on the 08-25-26 Finance & Administration Committee agenda)

Public Infrastructure, Environment and Sustainability Committee (PIES) (Final)

OPR 2022-0617 Value Blanket renewal 4 of 4 of with Western Systems Inc. (Everett, WA) for the purchase of traffic signal control cabinets from 10/4/2026-10/3/2027 at a cost not to exceed $932,000. (ITB 5693-22) (Council Sponsors: Council President Wilkerson and Council Member Klitzke) (Note: This item appeared on the 06-22-26 Finance & Administration Committee agenda and was inadvertently removed as a duplicate item on the 07-22-26 City Council Legislative agenda. This item is being added back to the agenda for Council consideration)

OPR 2026-0652 Contract with Black and Veatch Corporation (Overland Park, KS) to provide on-call mechanical and structural engineering support at the Upriver Dam. From July 1, 2026, through June 30, 2028. Contract will be eligible for a 1-year extension upon mutual agreement - $300,000 (plus applicable taxes). (RFQ 6539-26) (Council Sponsors: Council President Wilkerson and Council Members Klitzke and Zappone) (Note: this item originally appeared on the 7-14-26 PIES committee agenda and was approved by Council on 7-29-26 without the contract attached. A version of the contract with the incorrect dollar amount was approved by City Council on 8-26-26. This agenda item includes the corrected version of the contract for Council consideration)

OPR 2026-0251 Contract Amendment with WM Winkler Company, (Newman Lake, WA) to increase funds for the North Hillyard Sidewalk project from March 31, 2026, through October 31, 2026 – Additional amount not to exceed $70,000 plus applicable tax. (ENG 2024065) (Council Sponsor: Council President Wilkerson) (Note: This item appeared on the 08-25-26 Finance & Administration Committee agenda)

Urban Experience Committee (UE) (Final)

Finance and Administration Committee (F&A) (Final)

OPR 2024-0277 Extension of the current Value Blanket with CompuNet (Grangeville, Idaho) through September 30, 2028, for Cisco network and other equipment replacement and continued operation support including license subscriptions to meet contractual obligations. Requesting $2,800,000 annually to cover current and anticipated purchases. All purchases will use WA DES Contract # 05819/NASPO # AR3227 (A Replacement WA DES contract is in process, and a new number will be provided when available) and/or Omnia Contract # R250302, which offer pricing advantages for government entities. (Council Sponsors: Council President Wilkerson and Council Member Dillon)

OPR 2025-0551 Contract with Systems & Software for Annual Support and Maintenance of enQuesta, City's Utility Billing Management System. Contract term is November 1, 2026, through October 31, 2027. Contract amount is $240,090.93 plus applicable sales

taxes. (RFP 4480-18) (Council Sponsors: Council President Wilkerson and Council Member Dillon)

OPR 2026-0736 Contract with Leone & Keeble, Inc (Spokane) for construction, supplies and organization of the Water Department Main Office Renovation Phase 2 from October 15, 2026, to December 15, 2027 - total not to exceed $4,370,546.00 plus tax. (Council Sponsors: Council President Wilkerson and Council Members Dillon and Zappone)

OPR 2026-0737 Purchase from Mercedes Benz of Spokane (Liberty Lake, WA) of 1 Mercedes Sprinter Van for the Water Department - $76,535.15 including sales tax. (Council Sponsors: Council President Wilkerson and Council Member Dillon)

OPR 2026-0738 Purchase from National Auto Fleet Group, (Watsonville, CA) of 1 2027 Ford F450 Chassis equipped with Fuel Truck Body for the Water Department - $124,399.30 including sales tax. (Council Sponsors: Council President Wilkerson and Council Member Dillon)

OPR 2026-0739 Purchase from National Auto Fleet Group (Watsonville, CA) of (2) 2027 Ford F750 chassis equipped with Knapheide Service Bodies for $413,694.26 not including sales tax for the Water Department. (Council Sponsors: Council President Wilkerson and Council Member Dillon)

OPR 2026-0740 Purchase from Solid Waste Systems Inc (SWS Equipment LLC), (Spokane) of one Sewer Equipment 900 Eco Catch Basin Truck for the Wastewater Maintenance Department. - $606,809.07 including sales tax. (City Council Sponsors: Council President Wilkerson and Council Member Dillon)

OPR 2025-0693 Contract amendment with Christopher Kerley, Evans, Craven & Lackie, (Spokane) re Kershawn Grigsby, et al., v. City of Spokane Police Department, et. al. This amendment will increase contract by $50,000 for a contract total of $100,000. (Council Sponsors: Council President Wilkerson and Council Member Dillon)

OPR 2023-1095 Contract Renewal 3 of 4 with Clean Energy Corp, (Newport Beach, CA) for the repair and maintenance of Solid Waste Collection CNG fueling site. From October 1, 2026, through September 30, 2027 – not to exceed $250,000 plus applicable tax. (Council Sponsors: Council President Wilkerson and Council Member Dillon)

Report of the Mayor of Pending:

Pending claims & payments of previously approved obligations through: 08/28/2026. Total $7,762,532.87 with Parks & Library Claims being approved by their respective boards. Claims excluding Parks & Library Total $6,817,781.34. (CPR 2026-0002)

Pending payroll claims of previously approved obligations through: August 29, 2026. Payroll check #581642 through check #581779 - $10,320,899.31. (CPR 2026-0003)

EMERGENCY ORDINANCES

Emergency Ordinance C36928 (Council Sponsors: Council Members Dillon, Dixit, and Klitzke)

The Council received public comment on the emergency ordinance. After Council commentary, there was a **motion** by Council Member Cathcart, seconded by Council President Wilkerson **to amend** with the Cathcart Amendment, filed at 4:16 p.m. on September 9, 2026. After Council commentary, the motion to amend **failed 2-5** (Council Members Klitzke, Zappone, Dillon, Telis, and Dixit voting no). There was a **motion** by Council Member Dillon, seconded by Council Member Klitzke **to amend** with the Dillon Amendment, filed at 7:35 p.m. on September 8, 2026. After Council commentary, the motion to amend **carried 7-0**.

> **Upon 5-2 Roll Call Vote,** the City Council **passed Emergency Ordinance C36928** ensuring tenant protections during the Spokane Complex Fire and similar emergencies, adopting new sections to Chapter 10.57 of the Spokane Municipal Code, and declaring an emergency.
>
> **Ayes:** Dillon, Dixit, Klitzke, Telis, and Zappone
> **Nos:** Cathcart and Wilkerson
> **Abstain:** None
> **Absent:** None

SPECIAL BUDGET ORDINANCES

Special Budget Ordinance C36929 (Council Sponsors: Council President Wilkerson and Council Member Dillon)

> **Upon 7-0 Roll Call Vote,** the City Council **passed Special Budget Ordinance C36929** Amending Ordinance No. C36794, entitled in part, "An Ordinance adopting a mid-biennial modification budget for the City of Spokane", and amending it to accept wildfire relief donations in the H.O.M.E. Starts Here account and provide financial assistance to individuals and families impacted by the Spokane Complex Fires, and declaring an emergency.
>
> **Ayes:** Cathcart, Dillon, Dixit, Klitzke, Telis, Wilkerson, and Zappone
> **Nos:** None
> **Abstain:** None
> **Absent:** None

Special Budget Ordinance C36930 (Council Sponsors: Council President Wilkerson and Council Member Dillon)

> **Upon 7-0 Roll Call Vote,** the City Council **passed Special Budget Ordinance C36930** Amending Ordinance No. C36794, entitled in part, "An

Ordinance Adopting a Mid-Biennial Modification Budget for the City Of Spokane", and amending it to increase budget to account for increased claims experience for Risk Management, Workers' Compensation, and Employee Benefits, and declaring an emergency.

Ayes: Cathcart, Dillon, Dixit, Klitzke, Telis, Wilkerson, and Zappone
Nos: None
Abstain: None
Absent: None

RESOLUTIONS

RES 2026-0064 (Council Sponsors: Council Members Telis and Zappone)

Upon 6-1 Roll Call Vote, the City Council **adopted RES 2026-0064** setting forth the City Council's approval of investments from the Opioid Response Fund for culturally responsive treatment services; authorizing execution of related contracts without further City Council review and action. (Council Sponsors: Council Members Klitzke and Zappone)

Ayes: Dillon, Dixit, Klitzke, Telis, Wilkerson, and Zappone
Nos: Cathcart
Abstain: None
Absent: None

ORDINANCES

Ordinance C36925 (Council Sponsors: Council Members Klitzke and Zappone)

Upon 7-0 Roll Call Vote, the City Council **passed Ordinance C36925** elating to micro housing and sewer utility rate; enacting a new section 13.03.1129 to chapter 13 of the Spokane Municipal Code (SMC) and setting an effective date.

Ayes: Cathcart, Dillon, Dixit, Klitzke, Telis, Wilkerson, and Zappone
Nos: None
Abstain: None
Absent: None

Ordinance C36926 (Council Sponsors: Council Members Klitzke and Zappone)

Upon 7-0 Roll Call Vote, the City Council **passed Ordinance C36926** relating to Utilities, Franchise Taxes; amending Municipal Code section

08.10.040 to chapter 08.10 of the Spokane Municipal Code; and setting an effective date.

Ayes: Cathcart, Dillon, Dixit, Klitzke, Telis, Wilkerson, and Zappone
Nos: None
Abstain: None
Absent: None

Ordinance C36927 (Council Sponsors: Council Members Dixit and Zappone)

Upon 7-0 Roll Call Vote, the City Council **passed Ordinance C36927** establishing a Temporary Commercial Activation process to support economic development, expand small-business opportunities, and activate vacant and underutilized commercial spaces, and adopting a new section 17F.040.210 to chapter 17F.040 of the Spokane Municipal Code.

Ayes: Cathcart, Dillon, Dixit, Klitzke, Telis, Wilkerson, and Zappone
Nos: None
Abstain: None
Absent: None

Pursuant to Council Rule 2.2 A, the City Clerk left the meeting at 7:19 p.m.

OPEN FORUM

The Council received public comment in the Open Forum portion of the meeting.

ADJOURNMENT
Motion by Council Member Klitzke, seconded by Council Member Zappone, **to adjourn**; **carried 7-0.**

There being no further business to come before the City Council, the meeting adjourned at 7:27 p.m.

Minutes prepared by City Clerk Giacobbe R. Byrd and submitted for publication in the November 18, 2026, issue of the *Official Gazette*.

Approved by Spokane City Council on November 18, 2026.

_____
Betsy Wilkerson
City Council President

Attest:

_____
Giacobbe R. Byrd
City Clerk

MINUTES OF SPOKANE CITY COUNCIL

Tuesday, September 15, 2026

AGENDA REVIEW SESSION

The Agenda Review Session of the Spokane City Council held on the above date was called to order at 11:02 a.m. in the Council Chambers in the Lower Level of the Municipal Building, 808 West Spokane Falls Boulevard, Spokane, Washington. A recording of the meeting can be found at the following link: https://vimeo.com/spokanecitycouncil.

Roll Call

On roll call, Council President Wilkerson and Council Members Cathcart, Dillon, Dixit, Klitzke (appearing virtually), Telis (appearing virtually), and Zappone, were present.

City Administrator Alex Scott; Legislative Assistant Jackson Deese; City Council Policy Advisor Chris Wright; and City Clerk Giacobbe Byrd were also present for the meeting.

Interviews of Nominees to Boards and Commissions.

- None

BRIEFING ON AGENDA ITEMS

New Legislative Item

- OPR 2025-0781 (Custom Energy Contract) – **Matt Boston**

Hearing items

- None

Proposed Items

- None

Pending Items

The City Council received a briefing on the following agenda item(s), and Council inquiry and comment was held, with response by staff:

- ORD C36920 (Building Heights) / Clerk Correction – **Giacobbe Byrd**

Final Items

The City Council received a briefing on the following agenda item(s), and Council inquiry and comment was held, with response by staff:

- OPR 2026-0762 (Police Vehicles) – **Rick Giddings**

CONSIDERATION OF AMENDMENTS, ADDITIONS, AND DEFERRAL REQUESTS

Proposed Items

There were no considerations of amendments, additions, or deferrals of proposed items.

Pending Items

ORD C36937 (Nuisance properties)

Motion by Council Member Dillon, seconded by Council Member Cathcart **to defer** ORD C36937 to the pending section of the October 7, 2026, and the final section of the October 14, 2026, agendas. **Carried 7-0**.

OPR 2025-0781 (Custom Energy Contract)

Motion by Council Member Dillon, seconded by Council Member Zappone **to suspend** the rules. **Carried 7-0**.

Motion by Council Member Dillon, seconded by Council Member Cathcart **to add** OPR 2025-0781 to the pending section of the September 16, 2026, and the final section of the September 23, 2026, agendas. **Carried 7-0**.

Final Items

OPR 2026-0762 (Police Vehicles)

Motion by Council Member Zappone, seconded by Council Member Dixit **to defer** OPR 2026-0762 to the proposed section of the September 16, 2026, pending section of the September 23, 2026, and final section of the September 30, 2026, agendas. **Carried 7-0**.

Action to Approve Agenda

The City Council took the following action (pursuant to Council Rule 2.1.B):

> **Motion** by Council Member Dixit, seconded by Council Member Dillon, **to approve** the September 9, 2026, Council Legislative Agenda, as modified; **carried 7-0.**

ADJOURNMENT

Council President adjourned the meeting at 11:15 a.m. The next Regular Legislative Session took place on September 9, 2026.

Minutes prepared by City Clerk Giacobbe Byrd and submitted for publication in the November 11, 2026, issue of the *Official Gazette*.

Approved by Spokane City Council on November 18, 2026.

_____
Betsy Wilkerson
City Council President

Attest:

_____
Giacobbe R. Byrd
City Clerk

MINUTES OF SPOKANE CITY COUNCIL

Wednesday, September 16, 2026

LEGISLATIVE SESSION

The Legislative Session of the Spokane City Council held on the above date was called to order at 6:01 p.m. in the Council Chambers in the Lower Level of the Municipal Building, 808 West Spokane Falls Boulevard, Spokane, Washington. A recording of the meeting can be found at the following link: https://vimeo.com/spokanecitycouncil.

Land Acknowledgement
Council President Wilkerson started the meeting by reading the "Land Acknowledgement" (adopted by City Council on March 22, 2021, under Resolution 2021-0019) which appears on page 2 of the agenda packet.

Pledge of Allegiance
The Pledge of Allegiance was led by Council President Wilkerson.

There was no **Poetry at the Podium.**

There were no **Words of Inspiration** or **Special Introductions.**

Roll Call
On roll call, Council President Wilkerson and Council Members Cathcart, Dillon, Dixit, Klitzke, Telis (appearing virtually), and Zappone were present.

Legislative Assistant Jackson Deese; City Council Policy Advisor Chris Wright; and City Clerk Giacobbe Byrd were also present for the meeting.

There were no **Proclamations or Salutations.**

Reports from Community Organizations

- Grandview/Thorpe Neighborhood Council Report led by Tina Luerssen and Joy Sheikh

EXPRESS TESTIMONY

The Council received no public comment in the Express Testimony portion of the meeting.

FINAL HEARINGS

There were **no final hearings.**

PROPOSED LEGISLATIVE ITEMS

The Council received no public comment in the Proposed Legislative Items portion of the meeting.

PENDING LEGISLATIVE ITEMS

The City Clerk read the following pending Ordinances and Resolutions by title and further action was deferred:

Emergency Ordinances

ORD C36920 An ordinance to extend the duration of interim zoning ordinance C36646 and subsequent ordinances concerning height limits, reiterating a work program, and declaring an emergency. (Council Sponsors: Council Members Dillon and Klitzke) (City Council brought this item back to the legislative agenda by a motion to reconsider and amended this item on 09-08-2026)

Special Budget Ordinances

ORD C36938 Amending ordinance No. C36794, entitled in part, "An ordinance adopting a mid-biennial modification budget for the City of Spokane" and amending it to increase appropriation to restore extensive unplanned damage at the Northside Landfill due to the August 2026 wildfires, and declaring an emergency. (Council Sponsors: Council Members Klitzke and Zappone)

Resolutions

RES 2026-0058 A resolution adopting a "Council Operations Guide pursuant to Section 9 of the Spokane City Charter and Chapter 02.005 of the Spokane Municipal Code. (Council Sponsors: Council Members Zappone and Klitzke) Chris Wright (Note: This item was originally deferred under the incorrect resolution number RES 2026-0059 as part of the 08-18-26 agenda review)

RES 2026-0065 Accepting U.S. Department of Housing and Urban Development Continuum of Care and Youth Homelessness Demonstration Grant Funds and Authorization Administration of the Awards (Council Sponsors: Council Members Zappone and Telis)

ORDINANCES

There were **no pending ordinances.**

FINAL LEGISLTATIVE ITEMS

BOARD AND COMMISSION APPOINTMENTS

There were no board and commission appointments in the final section of the agenda.

REPORTS, CONTRACTS, AND CLAIMS

Upon 7-0 Voice Vote, the City Council **approved** the following reports, contracts, claims, and minutes:

Public Safety and Community Health Committee (PSCHC) (Final)

OPR 2026-0761 Purchase from MES Service Company LLC, (Spokane) of new structural and wildland firefighting hose to replace older hose reaching its end of service life. - $264,407.76 including sales tax. (Council Sponsors: Council Members Telis and Cathcart)

OPR 2026-0763 Acceptance of a mid-year grant award from the Smith Barbieri Progressive Fund in the amount of $10,000. (Council Sponsors: Council Members Telis and Cathcart)

OPR 2026-0764 Purchase from Aardvark Tactical (La Verne, CA) of life-saving equipment for officers working in high-risk environments, including ballistic vests for Spokane Police Hostage Negotiations Team, and Special Investigations Unit utilizing GSA contract #GS-07F-141DA. – 105,532.44 including applicable taxes. (Council Sponsors: Council Members Telis and Cathcart)

OPR 2026-0765 Acceptance of $209,679 grant award from Washington Traffic Safety Commission titled 2027-FG-6031 Spokane Police Department Outreach and Training Program. (Council Sponsors: Council Members Telis and Cathcart)

OPR 2026-0766 WSCJTC interlocal agreement to pay City of Spokane the total amount of money for the Spokane Academy Expansion project is a maximum amount not to exceed ONE MILLION ONE HUNDRED FIFTY THOUSAND dollars ($1.15 million). (Council Sponsors: Council Members Telis and Cathcart)

OPR 2026-0767 Acceptance of $200,000 FY 2027 Domestic Violence High Risk Team Program Grant through Washington State Department of Commerce. Renewable through 2030. (Council Sponsors: Council Members Telis and Cathcart)

OPR 2026-0768 Approval of a contract amendment with Tablet Command, Inc. (Walnut Creek, CA) for the addition of two-way Computer-Aided Dispatch (CAD) integration, associated software licenses, implementation and training services, and renewal of Tablet Command software and services for a three-year term from January 1, 2027, through

December 31, 2029, in a total amount not to exceed $260,634. (Council Sponsors: Council Members Telis and Cathcart)

OPR 2026-0769 Grant acceptance of $186,312 through the BJA FY25 Edward Byrne Memorial Justice Assistance Grant (JAG) Program. (Council Sponsors: Council Members Telis and Cathcart)

Public Infrastructure, Environment and Sustainability Committee (PIES) (Final)

Urban Experience Committee (UE) (Final)

Finance and Administration Committee (F&A) (Final)

Report of the Mayor of Pending:

Pending claims & payments of previously approved obligations through: 09/04/2026. Total $10,483,214.62 with Parks & Library Claims being approved by their respective boards. Claims excluding Parks & Library Total $9,957,859.39. (CPR 2026-0002)

Minutes:

- None

EMERGENCY ORDINANCES
There were no final emergency ordinances.

SPECIAL BUDGET ORDINANCES

Special Budget Ordinance C36931(Council Sponsors: Council Members Telis and Cathcart)

> **Upon 7-0 Roll Call Vote,** the City Council **passed ORD C36931** Amending Ordinance No. C36794, entitled in part, "An Ordinance Adopting a Mid-Biennial Modification Budget for the City of Spokane", and amending it to accept and spend a mid-year Smith-Barbieri Progressive Fund grant award, and declaring an emergency.
>
> **Ayes:** Cathcart, Dillon, Dixit, Klitzke, Telis, Wilkerson, and Zappone
> **Nos:** None
> **Abstain:** None
> **Absent:** None

Special Budget Ordinance C36932 (Council Sponsors: Council Members Telis and Cathcart)

> **Upon 7-0 Roll Call Vote,** the City Council **passed ORD C36932** Amending Ordinance No. C36794, entitled in part, "An Ordinance Adopting a Mid-

Biennial Modification Budget for the City Of Spokane", and amending it to account for increased cost and revenue for Basic Law Enforcement Academies (BLEA) for 2026, and declaring an emergency.

Ayes: Cathcart, Dillon, Dixit, Klitzke, Telis, Wilkerson, and Zappone
Nos: None
Abstain: None
Absent: None

Special Budget Ordinance C36933 (Council Sponsors: Council Members Telis and Cathcart)

Upon 7-0 Roll Call Vote, the City Council **passed ORD C36933** Amending Ordinance No. C36794, entitled in part, "An Ordinance Adopting a Mid-Biennial Modification Budget for the City Of Spokane", and amending it to accept a grant award from the Department of Commerce for fiscal year 2027 Domestic Violence High Risk Team Grant Program, and declaring an emergency.

Ayes: Cathcart, Dillon, Dixit, Klitzke, Telis, Wilkerson, and Zappone
Nos: None
Abstain: None
Absent: None

Special Budget Ordinance C36934 (Council Sponsors: Council Members Telis and Cathcart)

Upon 7-0 Roll Call Vote, the City Council **passed ORD C36934** Amending Ordinance No. C36794, entitled in part, "An Ordinance Adopting a Mid-Biennial Modification Budget for the City of Spokane", and amending it to accept a grant award from the Department of Justice for the jointly applied fiscal year 2025 JAG Grant Program with Spokane County, and declaring an emergency.

Ayes: Cathcart, Dillon, Dixit, Klitzke, Telis, Wilkerson, and Zappone
Nos: None
Abstain: None
Absent: None

Special Budget Ordinance C36935 (Council Sponsors: Council Members Telis and Cathcart)

Upon 7-0 Roll Call Vote, the City Council **passed ORD C36935** Amending Ordinance No. C36794, entitled in part, "An Ordinance Adopting a Mid-Biennial Modification Budget for the City of Spokane", and amending it to accept a grant award from the Washington Traffic Safety Commission for

outreach and training for Spokane Police Officers, and declaring an emergency.

Ayes: Cathcart, Dillon, Dixit, Klitzke, Telis, Wilkerson, and Zappone
Nos: None
Abstain: None
Absent: None

Special Budget Ordinance C36936 (Council Sponsors: Council Members Telis and Cathcart)

Upon 7-0 Roll Call Vote, the City Council **passed ORD C36936** Amending Ordinance No. C36794, Entitled in Part, "An Ordinance Adopting a Mid-Biennial Modification Budget for the City of Spokane", and amending it to transfer Police Dispatch positions to the Spokane United 911 Network, and declaring an emergency.

Ayes: Cathcart, Dillon, Dixit, Klitzke, Telis, Wilkerson, and Zappone
Nos: None
Abstain: None
Absent: None

RESOLUTIONS
There were no Final Resolutions.

ORDINANCES

Ordinance C36921 (Council Sponsors: Council President Wilkerson and Council Member Dillon)

Upon 7-0 Roll Call Vote, the City Council **passed Ordinance C36921** Modernizing and streamlining City of Spokane financial funds; repealing Sections 04.31.060, 04.31C.060, and Chapter 07.08; adopting a new Chapter 07.08A; and amending Section 13.04.020 of the Spokane Municipal Code.

Ayes: Cathcart, Dillon, Dixit, Klitzke, Telis, Wilkerson, and Zappone
Nos: None
Abstain: None
Absent: None

Pursuant to Council Rule 2.2 A, the City Clerk left the meeting at 6:34 p.m.

OPEN FORUM

The Council received public comment in the Open Forum portion of the meeting.

ADJOURNMENT
Motion by Council Member Klitzke, seconded by Council Member Dillon, **to adjourn**; **carried 7-0.**

There being no further business to come before the City Council, the meeting adjourned at 6:57 p.m.

Minutes prepared by City Clerk Giacobbe R. Byrd and submitted for publication in the November 18, 2026, issue of the *Official Gazette*.

Approved by Spokane City Council on November 18, 2026.

_____
Betsy Wilkerson
City Council President

Attest:

_____
Giacobbe R. Byrd
City Clerk

MINUTES OF SPOKANE CITY COUNCIL

Tuesday, September 22, 2026

AGENDA REVIEW SESSION

The Agenda Review Session of the Spokane City Council held on the above date was called to order at 11:03 a.m. in the Council Chambers in the Lower Level of the Municipal Building, 808 West Spokane Falls Boulevard, Spokane, Washington. A recording of the meeting can be found at the following link: https://vimeo.com/spokanecitycouncil.

Roll Call
On roll call, Council President Wilkerson and Council Members Cathcart, Dillon, Telis (arriving at 11:04 a.m.), and Zappone, were present. Council Members Dixit and Klitzke were absent.

City Administrator Alex Scott; Legislative Assistant Jackson Deese; City Council Policy Advisor Chris Wright; and City Clerk Giacobbe Byrd were also present for the meeting.

Interviews of Nominees to Boards and Commissions.

- None

BRIEFING ON AGENDA ITEMS

New Legislative Items

- None

Hearing items

- None

Proposed Items

- None

Pending Items
The City Council received a briefing on the following agenda item(s), and Council inquiry and comment was held, with response by staff:

- OPR 2026-0762 (Police Vehicle Purchase) – **Rick Giddings**

Final Items

- None

CONSIDERATION OF AMENDMENTS, ADDITIONS, AND DEFERRAL REQUESTS

Proposed Items

RES 2026-0069 (ESBID boundaries)
Motion by Council Member Zappone, seconded by Council Member Telis **to suspend** Council rules to consider the late Telis Amendment. **Failed 4-1** (Council Member Cathcart voting no)
Note: Prior to the motion to suspend failing, Council Member Cathcart made a point of order regarding whether rule suspension is necessary to consider the proposed Telis amendment. Council's Policy Advisor Chris Wright advised he believes a rule suspension is not necessary, but that there is reasonable disagreement about whether a rules suspension is necessary.
Motion by Council Member Dillon, seconded by Council Member Telis **to adopt** the Telis amendment to RES 2026-0069. **Carried 4-1**. (Council Member Zappone voting no)

RES 2026-0070 (Division TOD)
Motion by Council Member Dillon, seconded by Council Member Zappone **to defer** RES 2026-0070 to the proposed section of the October 28, 2026, the pending section of the November 4, 2026, and final section of the November 11, 2026, agendas. **Carried 5-0.**

Pending Items

OPR 2026-0762 (Police Vehicles)
Motion by Council Member Zappone, seconded by Council Member Telis **to adopt** Telis Amendment to OPR 2026-0762. **Carried 5-0**.

Final Items

RES 2026-0058 (Council Operations Guide)
Motion by Council Member Dillon, seconded by Council Member Zappone **to defer** RES 2026-0058 to the final section of the October 28, 2026, agenda. **Carried 4-1.** (Council Member Cathcart voting no)

Action to Approve Agenda
The City Council took the following action (pursuant to Council Rule 2.1.B):

> **Motion** by Council Member Telis, seconded by Council Member Dillon, **to approve** the September 23, 2026, Council Legislative Agenda, as modified; **carried 5-0.**

ADJOURNMENT
Council President adjourned the meeting at 11:15 a.m. The next Regular Legislative Session took place on September 23, 2026.

Minutes prepared by City Clerk Giacobbe Byrd and submitted for publication in the November 11, 2026, issue of the *Official Gazette*.

Approved by Spokane City Council on November 18, 2026.

_____
Betsy Wilkerson
City Council President

Attest:

_____
Giacobbe R. Byrd
City Clerk

MINUTES OF SPOKANE CITY COUNCIL

Tuesday, September 29, 2026

AGENDA REVIEW SESSION

The Agenda Review Session of the Spokane City Council held on the above date was called to order at 11:01 a.m. in the Council Chambers in the Lower Level of the Municipal Building, 808 West Spokane Falls Boulevard, Spokane, Washington. A recording of the meeting can be found at the following link: https://vimeo.com/spokanecitycouncil.

Roll Call
On roll call, Council President Wilkerson and Council Members Cathcart, Dixit, Klitzke, Telis, and Zappone, were present. Council Member Dillon was absent.

City Attorney Mike Piccolo; Legislative Assistant Jackson Deese; City Council Policy Advisor Chris Wright; and City Clerk Giacobbe Byrd were also present for the meeting.

The City Clerk read a report regarding Referendum No. 2026-1 Petitions (CPR 2026-0021)

Interviews of Nominees to Boards and Commissions.
- None

BRIEFING ON AGENDA ITEMS

New Legislative Items
- None

Hearing items
- None

Proposed Items
The City Council received a briefing on the following agenda item(s), and Council inquiry and comment was held, with response by staff:

- Ordinances C36811, C36812, C36813, C36815, and C36950 (utility rates) – **Marlene Fiest**
- ORD C36949 (Public Safety Funding Program) – **Adam McDaniel**
- RES 2026-0071 (Special Market Conditions / Pharmacy Contract) – **Allison Adam**
- RES 2026-0072 (relocation of ARPA Funds) – **Caleb Stanton**

Pending Items
- None

Final Items
The City Council received a briefing on the following agenda item(s), and Council inquiry and comment was held, with response by staff:

- OPR 2026-0190 (Contract amendment / Aurora Center) – **Keri Cederquist**
- ORD C36941 (Regulatory Relief / Zappone Amendment) – **Spencer Gardner**

CONSIDERATION OF AMENDMENTS, ADDITIONS, AND DEFERRAL REQUESTS

Proposed Items

RES 2026-0071(Special Market Conditions/Navitus pharmacy contract)
Motion by Council Member Klitzke, seconded by Council Member Telis **to adopt** Wilkerson Amendment to RES 2026-0071. **Carried 6-0.**
Motion by Council Member Klitzke, seconded by Council Member Zappone **to suspend** Council rules. **Carried 6-0.**
Motion by Council Member Klitzke, seconded by Council Member Zappone **to move** RES 2026-0071 to the final section of the September 30, 2026, agenda. **Carried 6-0.**

RES 2026-0069 (Expressing intent to modify ES BID boundaries and setting hearing)
Motion by Council Member Klitzke, seconded by Council Member Cathcart **to suspend** Council rules. **Carried 6-0.**
Motion by Council Member Klitzke, seconded by Council Member Zappone **to move** RES 2026-0069 to the final section of the October 7, 2026, agenda. **Carried 6-0.**

Pending Items

ORD C36943 (East Sprague BID Boundaries)
Motion by Council Member Klitzke, seconded by Council Member Telis **to defer** ORD C36943 to the pending section of the October 14, 2026, and final section (with hearing) of the October 28, 2026, agendas. **Carried 6-0**.

Final Items

ORD C36941 (“Like-for-Like” rebuilding relief)
Motion by Council Member Zappone, seconded by Council Member Telis **to adopt** Zappone Amendment No. 2 to ORD C36941. **Carried 5-1.** (Council Member Cathcart voting no)
Motion by Council Member Zappone, seconded by Council Member Klitzke **to defer** ORD C36941 to the final section of the October 7, 2026, agenda. **Carried 6-0**.

Action to Approve Agenda
The City Council took the following action (pursuant to Council Rule 2.1.B):

Motion by Council Member Klitzke, seconded by Council Member Zappone, **to approve** the September 30, 2026, Council Legislative Agenda, as modified; **carried 6-0.**

ADJOURNMENT

Council President adjourned the meeting at 11:56 a.m. The next Regular Legislative Session took place on September 30, 2026.

Minutes prepared by City Clerk Giacobbe Byrd and submitted for publication in the November 18, 2026, issue of the *Official Gazette*.

Approved by Spokane City Council on November 18, 2026.

_____
Betsy Wilkerson
City Council President

Attest:

_____
Giacobbe R. Byrd
City Clerk

MINUTES OF SPOKANE CITY COUNCIL

Tuesday, October 6, 2026

AGENDA REVIEW SESSION

The Agenda Review Session of the Spokane City Council held on the above date was called to order at 11:04 a.m. in the Council Chambers in the Lower Level of the Municipal Building, 808 West Spokane Falls Boulevard, Spokane, Washington. A recording of the meeting can be found at the following link: https://vimeo.com/spokanecitycouncil.

Roll Call
On roll call, Council President Wilkerson and Council Members Cathcart, Dixit (appearing virtually), Klitzke (appearing virtually), Telis, and Zappone, were present. Council Member Dillon was absent.

City Attorney Mike Piccolo; Legislative Assistant Jackson Deese; City Council Policy Advisor Chris Wright; and City Clerk Giacobbe Byrd were also present for the meeting.

Interviews of Nominees to Boards and Commissions.

- Jeremy Press Taylor - CHHS Board

BRIEFING ON AGENDA ITEMS

New Legislative Items
- None

Hearing items
- None

Proposed Items
- None

Pending Items
The City Council received a briefing on the following agenda item(s), and Council inquiry and comment was held, with response by staff:

- OPR 2026-0832 (ILA Radio cost-sharing / Spokane County and SREC) – **Stephen Williams**
- RES 2026-0075 (Opposition to IL26-001 and IL26-638) – **Zack Zappone**
- ORD C36811 (Annual Water Rates – amendment) – **Mike Piccolo**

Final Items
- None

CONSIDERATION OF AMENDMENTS, ADDITIONS, AND DEFERRAL REQUESTS

Proposed Items

There were no considerations of amendments, additions, or deferrals of proposed items.

Pending Items

OPR 2026-0832 (ILA Spokane County and SREC Radio cost-sharing)
Motion by Council Member Telis, seconded by Council Member Zappone **to suspend** Council rules. **Carried 6-0.**
Motion by Council Member Zappone, seconded by Council Member Telis **to add** OPR 2026-0832 to the pending section of October 7, 2026, and final section of the October 14, 2026, agendas. **Carried 6-0.**

RES 2026-0075 (Opposition to IL26-001 and IL26-638)
Motion by Council Member Zappone, seconded by Council Member Telis **to suspend** Council rules. **Carried 5-1.** (Council Member Cathcart voting no)
Motion by Council Member Zappone, seconded by Council Member Telis **to add** RES 2026-0075 to the pending section of October 7, 2026, and the final section of the October 14, 2026, agendas. **Carried 5-1.** (Council Member Cathcart voting no)

ORD C36951 (Previously listed as ORD C36811) (Annual Water Rates)
Motion by Council Member Klitzke, seconded by Council Member Zappone **to adopt** Wilkerson/Klitzke Amendment to ORD C36951. **Carried 6-0.**

ORD C36948 (Equitable budgeting)
Motion by Council Member Zappone, seconded by Council Member Telis **to defer** ORD C36948 to the pending section of the October 28, 2026, and the final section of the November 4, 2026, agendas. **Carried 6-0**.

Final Items

There were no considerations of amendments, additions, or deferrals of final items.

Note: There was a **motion** by Council Member Cathcart to defer ORD C36949, which was **withdrawn** after timing clarification.

Action to Approve Agenda

The City Council took the following action (pursuant to Council Rule 2.1.B):

> **Motion** by Council Member Telis, seconded by Council Member Zappone, **to approve** the October 7, 2026, Council Legislative Agenda, as modified; **carried 6-0.**

Executive Session

The City Council recessed at 11:24 a.m. and immediately reconvened into an Executive Session at 11:24 a.m. to discuss potential and pending litigation until 11:34 a.m. City

Attorney Michael Piccolo was present for the Executive Session. The Executive Session ended at 11:39 a.m. following one 5-minute extension.

ADJOURNMENT
Council President adjourned the meeting at 11:39 a.m. The next Regular Legislative Session took place on October 7, 2026.

Minutes prepared by City Clerk Giacobbe Byrd and submitted for publication in the November 18, 2026, issue of the *Official Gazette*.

Approved by Spokane City Council on November 18, 2026.

_____
Betsy Wilkerson
City Council President

Attest:

_____
Giacobbe R. Byrd
City Clerk

MINUTES OF SPOKANE CITY COUNCIL

Tuesday, October 13, 2026

AGENDA REVIEW SESSION

The Agenda Review Session of the Spokane City Council held on the above date was called to order at 11:01 a.m. in the Council Chambers in the Lower Level of the Municipal Building, 808 West Spokane Falls Boulevard, Spokane, Washington. A recording of the meeting can be found at the following link: https://vimeo.com/spokanecitycouncil.

Roll Call
On roll call, Council President Wilkerson and Council Members Cathcart, Dillon, Klitzke, Telis, Zappone, and Dixit were present.

City Administrator Alex Scott; Legislative Assistant Jackson Deese; City Council Policy Advisor Chris Wright; and Acting City Clerk David Loeser were also present for the meeting.

Interviews of Nominees to Boards and Commissions.

- None

BRIEFING ON AGENDA ITEMS

Hearing items

- None

Proposed Items
The City Council received a briefing on the following agenda item(s), and Council inquiry and comment was held, with response by staff:

- ORD C36962 (Annual Property Tax levy) – **Jacob Miller**

Pending Items
The City Council received a briefing on the following agenda item(s), and Council inquiry and comment was held, with response by staff:

- OPR 2026-0009 (Contract with Vector Solutions) - **Mike Forbes**
- SBO C36956 (Salary Savings – PMO) – **Matt Boston**

Final Items
The City Council received a briefing on the following agenda item(s), and Council inquiry and comment was held, with response by staff:

- OPR 2026-0801 (HUD Grant awards for CDBG, ESH and HOME funds) – **Chris Wright**

- ORDs C36951, C36952, C36953 (Utility rates / Wilkerson Amendment) - **Chris Averyt**

CONSIDERATION OF AMENDMENTS, ADDITIONS, AND DEFERRAL REQUESTS

Proposed Items
There were no considerations of amendments, additions, or deferrals of proposed items.

Pending Items
There were no considerations of amendments, additions, or deferrals of pending items.

Final Items

OPR 2026-0801 (HUD Grant awards for CDBG, ESH, and HOME funds)
Motion by Council Member Dillon, seconded by Council Member Zappone **to adopt** Wilkerson Amendment to OPR 2026-0801. **Carried 7-0.**

ORD C36951, ORD C36952, and ORD C36953 (Utility rates)
Motion by Council Member Klitzke, seconded by Council Member Zappone **to adopt** Wilkerson Amendments to ORD C36951, ORD C36952, and ORD C36953. **Carried 7-0.**

ORD C36937 (Chronic nuisance properties)
Motion by Council Member Dillon, seconded by Council Member Telis **to defer** ORD C36937 to the final section of the October 28, 2026, agenda. **Carried 7-0.**

Note: Council Policy Advisor, Chris Wright briefed Council regarding Ordinance C36944 (Amending SMC provisions on City Contracts), and noted that council staff is exercising its option under Rule 2.10.I to instruct the clerk to correct Section 1.A to read "An 'Administrative contract' means a contract…"

Action to Approve Agenda
The City Council took the following action (pursuant to Council Rule 2.1.B):

> **Motion** by Council Member Klitzke, seconded by Council Member Dillon, **to approve** the October 14, 2026, Council Legislative Agenda, as modified; **carried 6-0.**

Executive Session
The City Council recessed at 11:16 a.m. and immediately reconvened into an Executive Session at 11:17 a.m. to discuss potential and pending litigation until 11:57 a.m. City Attorney Michael Piccolo and Assistant City Attorneys Kate Fairborn, Matt Cozza, Dan Eigler and Jeff Sawyer were present for the Executive Session. The Executive Session ended at 12:18 p.m. following one 10-minute extension and two 5-minute extensions.

ADJOURNMENT

Council President adjourned the meeting at 12:18 p.m. The next Regular Legislative Session took place on October 14, 2026.

Minutes prepared by City Clerk Giacobbe Byrd and submitted for publication in the November 18, 2026, issue of the *Official Gazette*.

Approved by Spokane City Council on November 18, 2026.

_____
Betsy Wilkerson
City Council President

Attest:

_____
Giacobbe R. Byrd
City Clerk

Agenda Sheet for City Council:

Committee: Finance & Administration **Date:** 10/27/2026

Committee Agenda type: Discussion

Council Meeting Date: 11/18/2026

Date Rec'd	10/20/2026
Clerk's File #	RES 2026-0084
Cross Ref #	
Project #	
Bid #	
Requisition #	

Submitting Dept	CITY ATTORNEY
Contact Name/Phone	DAN EIGLER 6238
Contact E-Mail	DEIGLER@SPOKANECITY.ORG
Agenda Item Type	Resolutions
Council Sponsor(s)	BWILKERSON KKLITZKE
Sponsoring at Administrators Request	NO
Lease? NO	**Grant Related?** NO **Public Works?** NO
Agenda Item Name	SETTLEMENT RESOLUTION - ALLBERY V. CITY OF SPOKANE

Agenda Wording

Resolution approving settlement in Allbery v. City of Spokane litigation, Spokane County Superior Court Cause #26-2-03767-32.

Summary (Background)

Andrea Allbery filed a claim against the City of Spokane on April 1, 2026, out of an incident that took place on or about June 16, 2025.

What impacts would the proposal have on historically excluded communities?

n/a

How will data be collected, analyzed, and reported concerning the effect of the program/policy by racial, ethnic, gender identity, national origin, income level, disability, sexual orientation, or other existing disparities?

n/a

How will data be collected regarding the effectiveness of this program, policy, or product to ensure it is the right solution?

n/a

Describe how this proposal aligns with current City Policies, including the Comprehensive Plan, Sustainability Action Plan, Capital Improvement Program, Neighborhood Master Plans, Council Resolutions, and others?

n/a

Council Subcommittee Review

Fiscal Impact	
Approved in Current Year Budget?	YES
Total Cost	$ 65,000.00
Current Year Cost	$ 65,000.00
Subsequent Year(s) Cost	$

Narrative

Amount		**Budget Account**
Expense	$ 65,000.00	# TBD
Select	$	#
Select	$	#
Select	$	#
Select	$	#
Select	$	#

Funding Source	N/A
Funding Source Type	Select

Is this funding source sustainable for future years, months, etc?

Expense Occurrence	N/A

Other budget impacts (revenue generating, match requirements, etc.)

Approvals		**Additional Approvals**	
Dept Head	PICCOLO, MIKE		
Division Director			
Accounting Manager	DANIELS, DERREK		
Legal	PICCOLO, MIKE		
For the Mayor	PICCOLO, MIKE		

Distribution List	
MPICCOLO@SPOKANECITY.ORG	aduggan@spokanecity.org
deigler@spokanecity.org	mdominguez@spokanecity.org
zach.ray@us.davies-group.com	

Resolution No. 2026-0084

RESOLUTION RE SETTLEMENT
OF CIVIL CLAIM AGAINST CITY OF SPOKANE

Resolution approving settlement in Allbery v. City of Spokane litigation, Spokane County Superior Court Cause #26-2-03767-32.

WHEREAS, a claim for damages was filed with the City of Spokane by Andrea Allbery ("Claimant") on April 1, 2026, arising out of an incident on or about June 16th, 2025, in the City of Spokane, as more fully described in her claim for damages; and

WHEREAS, the City of Spokane has determined to resolve all claims with Claimant, and any third-parties who may claim a subrogated interest against the City, its officers, agents, employees, and contractors, for a payment of **SIXTY-FIVE THOUSAND DOLLARS AND NO/100 ($65,000.00)**.

WHEREAS, Claimant has agreed to accept said payment and in return to release any and all claims against the City of Spokane.

NOW, THEREFORE, be it resolved by the City Council of the City of Spokane:

The City of Spokane authorizes that payment in the amount of **SIXTY-FIVE THOUSAND DOLLARS AND NO/100 ($65,000.00)** to be paid to Claimant, without admission of fault or liability, as a full settlement and compromise of the above-referenced litigation, and/or claim, and in exchange the Claimant will provide a signed release fully extinguishing all claims by Claimant in connection with the incident and pledging to fully protect and indemnify the City of Spokane, their officers, agents, employees, contractors, and insurers, against all loss or liability in connection with said claim for damages or other relief.

PASSED the City Council this _____ day of _____, 2026.

_____
City Clerk

Approved as to form:

_____
Assistant City Attorney

Agenda Sheet for City Council:

Committee: Finance & Administration **Date:** 10/27/2026

Committee Agenda type: Discussion

Council Meeting Date: 11/18/2026

Date Rec'd	10/21/2026
Clerk's File #	RES 2026-0085
Cross Ref #	
Project #	
Bid #	
Requisition #	

Submitting Dept	CITY COUNCIL		
Contact Name/Phone	PAUL DILLON 625-6254		
Contact E-Mail	PDILLON@SPOKANECITY.ORG		
Agenda Item Type	Resolutions		
Council Sponsor(s)	PDILLON SDIXIT KKLITZKE		
Sponsoring at Administrators Request	NO		
Lease? NO	**Grant Related?** NO	**Public Works?** NO	
Agenda Item Name	DESIGNATION OF GREATER SPOKANE LOW INCOME HOUSING CONSORTIUM		

Agenda Wording

A RESOLUTION designating Greater Spokane Low Income Housing Development Consortium, doing business as Spokane Regional Land Bank, to establish and operate as a land bank as provided in Chapter 35.108 RCW.

Summary (Background)

Washington State Bill 1974 (2026), later codified into Chapter 35.108 RCW authorizes local governments to adopt local legislation to establish a land bank to use new State-created tools and funds to address the problems caused by vacant, abandoned, and tax-delinquent properties. Once so designated, the land bank can hold property, tax-exempt, while preparing it for affordable housing and public benefit uses included with or attached to affordable housing. The state law permits the establishment of a land bank by a public corporation, a public housing authority established under chapter 35.82 RCW, or an entity with tax-exempt 501(c)(3)status. The legislation permits the land bank to be designated by resolution or established by ordinance and to use new state-created tools and funds to address the problems caused by vacant, abandoned, and tax-delinquent properties. This resolution designates the Greater Spokane Low Income Housing Development Consortium, doing business as Spokane Regional Land Bank to operate as a land bank under the terms of RCW 35.108. Greater Spokane Low Income Housing Consortium is a nonprofit Washington corporation and has been designated as a tax-exempt entity under Section 501 (c) (3) of the Internal Revenue Code; and therefore, qualifies for designation to establish and operate a land bank under RCW 35.108. Further, it has consented to the designation and the terms governing that designation, including providing an annual report to the Mayor and City Council commencing March 1, 2027. The resolution states the designation will remain in effect for five years, until January 1, 2032, during which time the Council will evaluate the merits of the land bank program and either renew the designation here, evaluate other entities for designation, and/or establish a public corporation to operate a land bank.

What impacts would the proposal have on historically excluded communities?

The goal of the land bank designation is to increase low-income housing stock by making vacant or underutilized property more affordable for low-income housing developers. It is presumed such goals benefit all Spokane citizens, but in particular historically marginalized communities.

How will data be collected, analyzed, and reported concerning the effect of the program/policy by racial, ethnic, gender identity, national origin, income level, disability, sexual orientation, or other existing disparities?

The resolution requires the designee to report annually to the Mayor and Spokane City Council. The contents of the annual report will include, at a minimum. the information required by RCW 35.108.050: (a) Real property parcels acquired, held, and transferred during the year; (b) The manner of disposition and alignment with local housing and land use plans; (c) How each action advanced a community benefit; (d) The purchase price and assessed value of each parcel acquired; (e) The sales price and assessed value of each parcel transferred; (f) The number of housing units developed on each parcel transferred; (g) The affordability

How will data be collected regarding the effectiveness of this program, policy, or product to ensure it is the right solution?

See answer above

Describe how this proposal aligns with current City Policies, including the Comprehensive Plan, Sustainability Action Plan, Capital Improvement Program, Neighborhood Master Plans, Council Resolutions, and others?

This program is consistent with the multiple programs advanced by the City of Spokane to increase the stock of low income housing.

Council Subcommittee Review

None

Fiscal Impact	
Approved in Current Year Budget?	N/A
Total Cost	**$**
Current Year Cost	**$**
Subsequent Year(s) Cost	**$**

Narrative

Amount		**Budget Account**
Select	**$**	**#**
Select	**$**	**#**
Select	**$**	**#**
Select	**$**	**#**
Select	**$**	**#**
Select	**$**	**#**

Funding Source	N/A
Funding Source Type	Select

Is this funding source sustainable for future years, months, etc?

Expense Occurrence	N/A

Other budget impacts (revenue generating, match requirements, etc.)

Approvals		**Additional Approvals**	
Dept Head			
Division Director			
Accounting Manager	DANIELS, DERREK		
Legal	DUGGAN, ANDI		
For the Mayor			

Distribution List	
pdillon@spokanecity.org	benstuckart@gmail.com
amcdaniel@spokanecity.org	sdixit@spokanecity.org
Kklitzke@spokanecity.org	

RESOLUTION 2026-0085

A RESOLUTION designating Greater Spokane Low Income Housing Development Consortium, doing business as Spokane Regional Land Bank, to establish and operate as a land bank as provided in Chapter 35.108 RCW.

WHEREAS, on March 27, 2026, House Bill 1974, which was sponsored by State Representative Natasha Hill and which authorized coordinated land banking, was signed into law by Governor Bob Ferguson and later codified into Chapter 35.108 of the Revised Code of Washington; and

WHEREAS, House Bill1974 authorizes local governments to adopt local legislation to establish a land bank to use new State-created tools and funds to address the problems caused by vacant, abandoned, and tax-delinquent properties; and

WHEREAS, land bank hold property, tax-exempt, while preparing it for affordable housing and public benefit uses included with or attached to affordable housing; and

WHEREAS, a city or county may authorize the establishment of a land bank by a public corporation established under RCW 35.21.730, a public housing authority established under chapter 35.82 RCW, or an entity exempt from federal income taxation under 26 U.S.C. Sec. 501(c)(3) of the internal revenue code of 1986, as amended; and

WHEREAS, the city or county legislative authority must adopt an ordinance or resolution authorizing such entity to establish and operate a land bank; and

WHEREAS, the Spokane Regional Land Bank was established in May 2022 by the Greater Spokane Low Income Housing Consortium with a mission is to provide access to low-cost land for affordable housing development; and

WHEREAS, the Greater Spokane Low Income Housing Consortium is a nonprofit Washington corporation and has been designated as a tax-exempt entity under Section 501 (c) (3) of the Internal Revenue Code; and therefore, qualifies for designation to establish and operate a land bank under RCW 35.108; and

WHEREAS, the City Council finds that designating the Greater Spokane Regional Land Bank as a land bank is the most expeditious path toward implementing a land bank under House Bill 1974; and

WHEREAS, the City Council finds that the governing body of the Greater Spokane Regional Land Bank, in a written resolution dated _____, 2026, has consented to designation as a land bank and agreed to abide by the terms of such designation; and

WHEREAS, the City Council intends for this designation to be in effect for approximately five years, until January 1, 2032, during which time the Council will evaluate the merits of the land bank program and either renew the designation here, evaluate other entities for designation, and/or establish a public corporation to operate a land bank;

NOW, THEREFORE, **BE IT RESOLVED**, that pursuant to RCW 35.108.030, the Spokane City Council designates Greater Spokane Low Income Housing Development Consortium, doing business as Spokane Regional Land Bank, (UBI 601 258 322) to establish and operate a land bank as provided under Chapter 35.108 RCW; and

BE IT FURTHER RESOLVED that the public purpose of this designation is to permit the Greater Spokane Low Income Housing Development Consortium, dba Spokane Regional Land Bank, to acquire, hold, manage and transfer property for affordable housing consistent with adopted local housing plans and Chapter 36.70A RCW;

BE IT FURTHER RESOLVED that the Greater Spokane Low Income Housing Development Consortium, dba Spokane Regional Land Bank, shall govern its affairs consistent with Washington and federal law relating to nonprofit corporations, and public oversight shall be satisfied through the annual reporting required by this resolution and Section 35.108.050; and

BE IT FURTHER RESOLVED that Greater Spokane Low Income Housing Development Consortium, dba Spokane Regional Land Bank, shall be deemed to have all of the responsibilities and authority of a land bank under Chapter 35.108 RCW, including, but not limited to:

1) Establishing and maintaining an inventory of real property acquired, held, leased, or transferred by a land bank authority consistent with Chapter 35.108 RCW;
2) Acquiring, holding, managing, improving, leasing, transferring and/or disposing to be used as affordable housing, consistent with Chapter 35.108 RCW, including transfers at less than fair market value in exchange for affordability requirements stated therein; and
3) Commencing March 1, 2027, and thereafter on March 1 of each year, preparing and publishing an annual report fulfilling the requirements of RCW 35.108.050 and in addition, formally presenting such report to the Mayor of Spokane and the Spokane City Council; and

BE IT FURTHER RESOLVED that the designation under this resolution shall expire on January 1, 2032 unless renewed by resolution of this council or supplanted by ordinance of equal effect.

Adopted by the City Council this ____ day of November, 2026.

_____
City Clerk

Approved as to form:

_____
Assistant City Attorney

Agenda Sheet for City Council:

Committee: Finance & Administration **Date:** 10/27/2026

Committee Agenda type: Discussion

Council Meeting Date: 11/18/2026

Date Rec'd	10/16/2026		
Clerk's File #	RES 2026-0086		
Cross Ref #			
Project #			
Submitting Dept	FINANCE & ADMINISTRATION	**Bid #**	
Contact Name/Phone	MATT BOSTON 625-6820	**Requisition #**	
Contact E-Mail	MBOSTON@SPOKANECITY.ORG		
Agenda Item Type	Resolutions		
Council Sponsor(s)	BWILKERSON PDILLON		
Sponsoring at Administrators Request	NO		
Lease? NO	**Grant Related?** NO	**Public Works?** NO	
Agenda Item Name	DOWNRIVER SIP REFI LOAN		

Agenda Wording

A resolution of the City of Spokane, Washington, providing for the issuance and sale of a taxable Limited Tax General Obligation Refunding Bond in the aggregate principal amount of not to exceed $1,535,000; establishing interfund loan facilities from the Spokane Investment Pool to refinance an existing interfund loan and pay certain bond issuance costs.

Summary (Background)

The 2021 $2.5M Downriver SIP loan has not been paid off and needs to be refinanced. The Golf fund has the opportunity to prepay this refinanced loan.

What impacts would the proposal have on historically excluded communities?

N/A - this is authorizing a refinance of existing internal debt

How will data be collected, analyzed, and reported concerning the effect of the program/policy by racial, ethnic, gender identity, national origin, income level, disability, sexual orientation, or other existing disparities?

N/A - this is authorizing a refinance of existing internal debt

How will data be collected regarding the effectiveness of this program, policy, or product to ensure it is the right solution?

N/A - this is authorizing a refinance of existing internal debt

Describe how this proposal aligns with current City Policies, including the Comprehensive Plan, Sustainability Action Plan, Capital Improvement Program, Neighborhood Master Plans, Council Resolutions, and others?

N/A - this is authorizing a refinance of existing internal debt

Council Subcommittee Review

Fiscal Impact	
Approved in Current Year Budget?	YES
Total Cost	**$** $1,535,000
Current Year Cost	**$**
Subsequent Year(s) Cost	**$**

Narrative

Amount		**Budget Account**
Select	**$**	**#**
Select	**$**	**#**
Select	**$**	**#**
Select	**$**	**#**
Select	**$**	**#**
Select	**$**	**#**

Funding Source	Recurring
Funding Source Type	Reallocation

Is this funding source sustainable for future years, months, etc?

Expense Occurrence	One-Time

Other budget impacts (revenue generating, match requirements, etc.)

Approvals		**Additional Approvals**	
Dept Head	STRATTON, JESSICA		
Division Director	BOSTON, MATTHEW		
Accounting Manager	DANIELS, DERREK		
Legal	DUGGAN, ANDI		
For the Mayor	PICCOLO, MIKE		

Distribution List	
mboston@spokanecity.org	jstratton@spokanecity.org
jmiller@spokanecity.org	sneal@spokanecity.org

CITY OF SPOKANE, WASHINGTON

DOWNRIVER GOLF COURSE IMPROVEMENTS

LIMITED TAX GENERAL OBLIGATION REFUNDING BOND SERIES 2026 (TAXABLE)

RESOLUTION NO. 2026–0086

A RESOLUTION of the City of Spokane, Washington, providing for the issuance and sale of a taxable Limited Tax General Obligation Refunding Bond in the aggregate principal amount of not to exceed $1,535,000; establishing interfund loan facilities from the Spokane Investment Pool to refinance an existing interfund loan and pay certain bond issuance costs; fixing the date, form, maturity, interest rate, terms and covenants of the bond; establishing the provisions for repayment of the interfund loan established thereby; authorizing the sale and delivery of the bond to the City, and providing for other matters properly relating thereto.

ADOPTED November 18, 2026

PREPARED BY:

KUTAK ROCK LLP
Spokane, Washington

CITY OF SPOKANE, WASHINGTON

DOWNRIVER GOLF COURSE IMPROVEMENTS
LIMITED TAX GENERAL OBLIGATION REFUNDING BOND
SERIES 2026 (TAXABLE)

TABLE OF CONTENTS*

Section 1.	Definitions	2
Section 2.	Rules of Interpretation	3
Section 3.	Authorization and Description of Bond.	3
Section 4.	Sale of Bond and Prepayment	4
Section 5.	Application of Bond Proceeds.	4
Section 6.	Pledge of Funds and Credit	4
Section 7.	Registration and Payments.	4
Section 8.	Execution and Authentication of Bond	4
Section 9.	Form of Bond	5
Section 10.	Ongoing Disclosure.	7
Section 11.	Prior Acts.	7
Section 12.	Severability.	7
Section 13.	Effective Date.	7

* This Table of Contents and the cover pages are not a part of the following Resolution and are included only for the convenience of the reader.

CITY OF SPOKANE, WASHINGTON

RESOLUTION NO. 2026 –0086

A RESOLUTION of the City of Spokane, Washington, providing for the issuance and sale of a taxable Limited Tax General Obligation Refunding Bond in the aggregate principal amount of not to exceed $1,535,000; establishing interfund loan facilities from the Spokane Investment Pool to refinance an existing interfund loan and pay certain bond issuance costs; fixing the date, form, maturity, interest rate, terms and covenants of the bond; establishing the provisions for repayment of the interfund loan established thereby; authorizing the sale and delivery of the bond to the City, and providing for other matters properly relating thereto.

RECITALS

WHEREAS, the City of Spokane, Spokane County, Washington (the "**City**"), is a first-class charter city duly organized and existing under and by virtue of the laws of the State of Washington and the Charter of the City; and

WHEREAS, pursuant to Resolution No. 2021-0035, adopted on May 3, 2021, the City authorized an interfund loan from the Spokane Investment Pool to the Asset Management Fund in the amount of up to $2,500,000.00, which was used for capital improvements to Downriver Golf Course (the "**2021 Loan**"), which remains outstanding in the principal amount of $1,709,601.78; and

WHEREAS, the 2021 Loan was documented with and secured by the City's Downriver Golf Course Improvements Limited Tax General Obligation Bond, Series 2021 (the "**2021 Bond**"), which was purchased by the Spokane Investment Pool ("**SIP**"), and is prepayable, in whole or in part, at any time; and

WHEREAS, RCW 35.39.030(4) authorizes the City to invest its money in general obligation or utility revenue bonds or warrants of its own or of any other city or town in the state, and Sections 5.8.5 and 5.12.1 of the City's Administrative Policy and Procedure for Investments ("**Investment Policy**") further authorize the City Treasurer to invest in general obligation bonds or other bonds issued by the City as defined in Section 4.9 of the Investment Policy; and

WHEREAS, it is deemed necessary and in the best interest of the City to provide for the refunding of the 2021 Bond and restructuring of the debt service thereon through the issuance of the City's Downriver Golf Course Improvements Limited Tax General Obligation Refunding Bond, Series 2026 (Taxable) in the aggregate principal amount of not to exceed $1,535,000 (the "**Bond**") to be purchased by the SIP.

NOW THEREFORE, BE IT RESOLVED by the City Council as follows:

SECTION 1. DEFINITIONS. As used in this Resolution the following words shall have the following meanings:

Asset Management Fund means the City's existing special fund of the same name into which all revenues collected for and allocated to the payment of the principal and interest on the Bond shall be deposited into a separate account for such purpose; and into which the principal proceeds received from the sale and delivery of the Bond shall be paid into a separate account within the Asset Management Fund and used to pay the costs of refunding the 2021 Bond and costs of issuing the Bond.

Bond means the City of Spokane Downriver Golf Course Improvements Limited Tax General Obligation Refunding Bond, Series 2026 (Taxable), issued pursuant to this Resolution in the principal amount of not to exceed $1,535,000.

Bond Owner or ***Registered Owner*** means the City of Spokane, as payee, for the benefit of the Spokane Investment Pool.

Bond Registrar means the Treasurer or any successor appointed by the Treasurer.

City means the City of Spokane, Spokane County, Washington, a first-class charter city duly organized and existing under the laws of the State of Washington and its City Charter.

City Council means the general legislative authority of the City as the same shall be duly and regularly constituted from time to time.

Maturity Date means a date established by the SIP upon purchase of the Bond, in conformance with the semi-annual payment dates for the Bond, provided, such date shall not exceed the date that is five years from the date of issuance of the Bond.

Resolution means this Resolution, which authorizes, among other things, the City to issue the Bond.

SIP means the Spokane Investment Pool.

SIP Internal Lending Rate means an interest rate formula for the interfund lending of funds from the Spokane Investment Pool, calculated on the first day of the month in which the Bond is issued, as follows: a rate equivalent to the United States Treasury Rate of like maturity plus 50 basis points (.50%).

Treasurer means the Treasurer of the City, or any successor to the functions of the Treasurer.

2021 Bond means the City's Downriver Golf Course Improvements Limited Tax General Obligation Bond, Series 2021, issued pursuant to Resolution No. 2021-0035, which bond is currently outstanding in the principal amount of $1,709,601.78.

SECTION 2. RULES OF INTERPRETATION. In this Resolution, unless the context otherwise requires:

(a) The terms "hereby," "hereof," "hereto," "herein," "hereunder" and any similar terms, as used in this Resolution, refer to this Resolution as a whole and not to any particular article, section, subdivision or clause hereof, and the term "hereafter" shall mean after, and the term "heretofore" shall mean before, the date of this Resolution;

(b) Words of the masculine gender shall mean and include correlative words of the feminine and neuter genders and words importing the singular number shall mean and include the plural number and vice versa;

(c) Words importing persons shall include firms, associations, partnerships (including limited partnerships), trusts, corporations and other legal entities, including public bodies, as well as natural persons;

(d) Any headings preceding the text of the several Sections of this Resolution, and any table of contents or marginal notes appended to copies hereof, shall be solely for convenience of reference and shall not constitute a part of this Resolution, nor shall they affect its meaning, construction or effect; and

(e) All references herein to "sections" and other subdivisions or clauses are to the corresponding sections, subdivisions or clauses hereof.

SECTION 3. AUTHORIZATION AND DESCRIPTION OF BOND.

To provide funds to refinance the 2021 Bond and to pay costs of issuing the Bond, the City shall issue a single taxable limited tax general obligation refunding bond of the City to the SIP in the principal amount of not to exceed $1,535,000 to document, secure and restructure an interfund loan facility with the SIP of not to exceed $1,535,000.

The Bond shall be dated as of the date of delivery to the SIP, shall be in the denomination of not to exceed $1,535,000, shall be fully registered as to principal and interest, shall be numbered in such manner and with any additional identification as the Bond Registrar deems necessary for identification, and shall mature on the Maturity Date. Interest on the Bond shall be calculated on the basis of a 360-day year consisting of twelve 30-day months, and principal of and interest thereon shall be due semi-annually on the payment dates established by the SIP, provided the final payments may be balloon payments due and payable on the Maturity Date.

The Bond shall bear interest at the applicable SIP Internal Lending Rate. The Bond shall be amortized to create approximately level debt service based on semi-annual payments of principal and interest, with final payment of principal and all accrued interest on the Maturity Date, which final payment may be a balloon payment. The SIP shall provide an amortization schedule detailing the principal and interest payment amounts and dates, including the Maturity Date, and attach such schedule as Exhibit A to the Bond.

SECTION 4. SALE OF BOND AND PREPAYMENT.

(a) *Approval of Sale.* The City Council hereby approves the SIP's offer to purchase the Bond and refinance an existing interfund loan on the terms set forth in this Resolution. The proper City officials are hereby authorized and directed to do everything necessary for the prompt execution and delivery of the Bond to the City of Spokane for the benefit of the SIP.

(b) *Prepayment.* At the option of the City, or upon demand of the SIP, the Bond may be prepaid, in whole or in part, at any time, with prepayments to apply first to interest and then to principal. No notice of prepayment to the Registered Owner is required. Interest on prepaid principal shall cease to accrue on the date of prepayment.

SECTION 5. APPLICATION OF BOND PROCEEDS.

(a) The proceeds of the Bond shall be expended to pay the costs of refinancing the 2021 Bond and to pay the costs of issuing the Bond as authorized herein.

(b) The net proceeds of the Bond shall be deposited into the Asset Management Fund for the purposes of refunding the 2021 Bond and discharging the obligations of the City relating thereto under Resolution No. 2021-0035.

SECTION 6. PLEDGE OF FUNDS AND CREDIT.

To pay principal of and interest on the Bond as the same shall become due or on demand by the SIP, the City hereby irrevocably covenants that it will deposit legally available funds into the Asset Management Fund in amounts sufficient to pay when due the principal of and interest on the Bond. The full faith, credit and taxing power of the City are hereby irrevocably pledged for the prompt payment of such principal and interest.

SECTION 7. REGISTRATION AND PAYMENTS.

The Treasurer shall act as authenticating agent, paying agent and registrar for the Bond (collectively, the "**Bond Registrar**"). Both principal of and interest on the Bond shall be payable in lawful money of the United States of America. Payments of principal of and interest on the Bond shall be paid by interfund transfer, check, wire or electronic transfer. Final payment of all principal of and interest on the Bond shall be paid upon presentation and surrender of the Bond to the Bond Registrar. The Bond is not transferable.

SECTION 8. EXECUTION AND AUTHENTICATION OF BOND.

The Bond shall be executed on behalf of the City with the manual or facsimile signature of the Mayor and attested by the manual or facsimile signature of the City Clerk, and the seal of the City shall be impressed thereon.

Only a Bond that bears a Registration Certificate in the form set forth in Section 9 hereof, manually executed by the Bond Registrar, shall be valid or obligatory for any purpose or entitled to the benefits of this Resolution. Such Registration Certificate shall be conclusive evidence that

the Bond so authenticated has been duly executed, authenticated and delivered hereunder and is entitled to the benefits of this Resolution.

In case any of the officers who shall have executed the Bond shall cease to be an officer or officers of the City before the Bond shall have been authenticated or delivered by the Bond Registrar, or issued by the City, such Bond may nevertheless be authenticated, delivered and issued and upon such authentication, delivery and issuance, shall be as binding upon the City as though those who signed the same had continued to be such officers of the City. The Bond may also be signed and attested on behalf of the City by such persons as at the actual date of execution of the Bond shall be the proper officers of the City although at the original date of the Bond any such person shall not have been such officer of the City.

SECTION 9. FORM OF BOND.

The Bond shall be in substantially the following form:

UNITED STATES OF AMERICA

NO. R-1 $_____

STATE OF WASHINGTON
CITY OF SPOKANE
DOWNRIVER GOLF COURSE IMPROVEMENTS
LIMITED TAX GENERAL OBLIGATION REFUNDING BOND
SERIES 2026 (TAXABLE)

INTEREST RATE: SIP Internal Lending Rate, as described in the Bond Resolution

MATURITY DATE: _____ 1, 20___

REGISTERED OWNER: CITY OF SPOKANE, WA for the benefit of the SPOKANE INVESTMENT POOL

TAX IDENTIFICATION #: 91-6001280

PRINCIPAL AMOUNT: _____ AND 00/100 DOLLARS

CITY OF SPOKANE, Spokane County, Washington, a municipal corporation of the State of Washington (the "City"), for value received hereby promises to pay to the Registered Owner identified above, the principal amount of this Bond, plus interest, as indicated above.

This Bond is issued under authority of Resolution No. 2026-____, adopted by the City Council on _____, 2026 (the "Bond Resolution"), to document and secure an interfund loan from the Spokane Investment Pool ("SIP") to pay the costs of refunding the City's Downriver Golf Course Improvements Limited Tax General Obligation Bond, Series 2021, and to pay the costs of

issuance of the Bond. Capitalized terms not otherwise defined in this Bond shall have the meanings given such terms in the Bond Resolution.

Interest on the interfund loan established hereunder shall be determined as described in the Bond Resolution, shall be set at the SIP Internal Lending Rate, and shall be calculated on the basis of a 360-day year consisting of twelve 30-day months.

Both principal of and interest on this Bond are payable in lawful money of the United States of America on the dates and in the amounts set forth in the amortization schedule attached hereto as Exhibit A. Upon final payment of all installments of principal and interest thereon, this Bond shall be submitted to the Treasurer of the City (the "Bond Registrar") for cancellation and surrender. Installments of principal of and interest on this Bond shall be paid by interfund transfer or by check or draft mailed on the date such principal and interest is due or by electronic funds transfer made on the date such interest is due to the Registered Owner or nominee at the address appearing on the bond register.

This Bond is not transferable. This Bond is prepayable upon demand of the SIP.

The City reserves the right to prepay principal of this Bond in advance of the scheduled payments set forth in Exhibit A, in whole or in part, at any time, with no prepayment penalty in accordance with the terms of the Bond Resolution.

To pay installments of principal of and interest on the Bond as the same shall become due or on demand by the SIP, the City hereby irrevocably covenants that it will deposit legally available funds into the Asset Management Fund in amounts sufficient to pay such principal of and interest on the Bond. The full faith, credit and taxing power of the City are hereby irrevocably pledged for the prompt payment of such principal and interest.

This Bond shall not be valid or become obligatory for any purpose or be entitled to any security or benefit under the Bond Resolution until the Registration Certificate hereon shall have been manually signed by the Bond Registrar.

It is hereby certified that all acts, conditions and things required by the Constitution and statutes of the State of Washington to exist, to have happened, been done and performed precedent to and in the issuance of this Bond have happened, been done and performed and that the issuance of this Bond does not violate any constitutional, statutory or other limitation upon the amount of bonded indebtedness that the City may incur.

IN WITNESS WHEREOF, the City of Spokane, Washington, has caused this Bond to be signed with the facsimile or manual signature of the Mayor, to be attested by the facsimile or manual signature of the City Clerk, and the corporate seal of the City to be reproduced hereon, as of the ___ day of _____, 2026.

CITY OF SPOKANE, WASHINGTON

By_____*/s/*_____
Mayor

ATTEST:

_____/s/_____
City Clerk

(SEAL)

CERTIFICATE OF REGISTRATION

Date of Authentication: _____, 2026

This Bond is the Downriver Golf Course Improvements Limited Tax General Obligation Refunding Bond, Series 2026 (Taxable) of the City dated _____, 2026 described in the within-mentioned Bond Resolution.

TREASURER of the City of Spokane,
as Bond Registrar

By_____/s/_____

SECTION 10. ONGOING DISCLOSURE.

The Bond secures an interfund loan. The City has determined that the Bond is not subject to Rule 15c2-12 of the Securities and Exchange Commission under the Securities Exchange Act of 1934, and the City makes no undertaking regarding ongoing disclosure with respect to the Bond.

SECTION 11. PRIOR ACTS.

All acts taken pursuant to the authority of this Resolution but prior to its effective date are hereby ratified and confirmed.

SECTION 12. SEVERABILITY.

If any provision in this Resolution is declared by any court of competent jurisdiction to be contrary to law, then such provision shall be null and void and shall be deemed separable from the remaining provisions of this Resolution and shall in no way affect the validity of the other provisions of this Resolution or of the Bond.

SECTION 13. EFFECTIVE DATE.

This Resolution shall become effective immediately upon its adoption.

[Remainder of Page Intentionally Left Blank]

Adopted this __ day of _____, 2026.

CITY OF SPOKANE
Spokane County, Washington

_____
Betsy Wilkerson, Council President

ATTEST:

_____
Clerk

_____
Mayor Lisa Brown

(SEAL)

APPROVED AS TO FORM:

_____
City Attorney

_____
Tanya L. Lawless, Bond Counsel

Agenda Sheet for City Council:

Committee: Finance & Administration **Date:** 10/27/2026

Committee Agenda type: Discussion

Council Meeting Date: 11/18/2026

Date Rec'd	10/21/2026		
Clerk's File #	RES 2026-0087		
Cross Ref #			
Project #			
Submitting Dept	GRANTS MANAGEMENT	**Bid #**	
Contact Name/Phone	COLE WICKER X6822	**Requisition #**	
Contact E-Mail	WWICKER@SPOKANECITY.ORG		
Agenda Item Type	Resolutions		
Council Sponsor(s)	BWILKERSON PDILLON		
Sponsoring at Administrators Request	NO		
Lease? NO	**Grant Related?** YES	**Public Works?** NO	
Agenda Item Name	RESOLUTION FOR THE FUNDING FOR SUBRECIPIENT CONTRACTS THROUGH		

Agenda Wording

A resolution setting forth the City Council's approval and endorsement of funding for a one-time BJA Discretionary Fund Grant from the Department of Justice for sub-recipient contracts.

Summary (Background)

In September 2026, the city received $1,250,000 in funding for new mobile response teams from the Byrne Discretionary Fund. This resolution sets forth provisions for future contracting process with our behavioral health providers supported within the grant. The budget will include: two sub-recipient contracts, one for our 911 Clinicians and one for our Behavioral Health Units, ($1,025,000); Supplies and Furniture for the new staff ($124,630); Staff Training for new SMART protocols ($27,000); Administration Costs ($37,500); and Indirect Costs ($35,870). Frontier Behavioral Health submitted a favorable budget with their RFP. This $568,763 request includes $353,733 in salaries for 4.67 FTE positions, benefits ($93,739), other direct costs ($21,017), indirect costs ($70,273), and startup costs ($30,000)

What impacts would the proposal have on historically excluded communities?

This funding allows the City of Spokane to expand its SMART (Spokane Mobile Alternative Response Teams) program and will divert individuals from arrest or hospital emergency rooms and create additional capacity for the Spokane Police Department and Spokane Fire Department. These civilian-led mobile response teams will respond to calls that do not involve a safety risk or medical emergency. This program will target behavioral health calls and offer more appropriate care and follow-up services. This position will serve some of Spokane's most vulnerable populations, those experiencing behavioral health crises.

How will data be collected, analyzed, and reported concerning the effect of the program/policy by racial, ethnic, gender identity, national origin, income level, disability, sexual orientation, or other existing disparities?

Data collection will be in accordance with City and Department Policy. We will track the number of calls, time spent on response, estimated time saved on EMT resources, and 911 utilization during overdose scenarios. We do not anticipate disaggregating data as noted above.

How will data be collected regarding the effectiveness of this program, policy, or product to ensure it is the right solution?

Data collection will be in accordance with City and Department Policy. We will track the number of calls, time spent on response, estimated time saved on EMT resources, and 911 utilization during overdose scenarios. As we look towards evaluating program success, we hope to track time served, usable opioid data, and our time saved as major benchmarks for success. The City of Spokane will measure success by tracking individual diversions from arrest and emergency rooms as well as the amount of time a mobile alternative team saves traditional police and fire/EMS responses, and the number of repeat emergency contacts[CW1.1][YM1.2]. We

Describe how this proposal aligns with current City Policies, including the Comprehensive Plan, Sustainability Action Plan, Capital Improvement Program, Neighborhood Master Plans, Council Resolutions, and others?

This program supports the new initiatives through the SUN. Expanded emergency response programs broadly benefits the City.

Council Subcommittee Review

Fiscal Impact

Approved in Current Year Budget?	NO
Total Cost	$ 1,250,000
Current Year Cost	$
Subsequent Year(s) Cost	$

Narrative

See Narrative in Summary Section

Amount		Budget Account
Revenue	$ 1,250,000	# 1330-95671-99999-33116-99999
Expense	$ 1,025,000	# 1330-95671-14230-54201-99999
Expense	$ 24,630	# 1330-95671-14230-53101-99999
Expense	$ 100,000	# 1330-95671-14230-53505-99999
Expense	$ 35,870	# 1330-95671-14230-54992-99999
Expense	$ 46,739	# 1330-95671-14230-51991-99999

Funding Source	One-Time
Funding Source Type	Grant

Is this funding source sustainable for future years, months, etc?

Expense Occurrence	One-Time

Other budget impacts (revenue generating, match requirements, etc.)

Additional Budget Code: Expense – $17,761- 1330-95671-14230-52991-99999

Approvals		Additional Approvals	
Dept Head	STRATTON, JESSICA	**ACCOUNTING -**	BROWN, SKYLER
Division Director	STRATTON, JESSICA		
Accounting Manager	DUFFEY, ANDREW		
Legal	DUGGAN, ANDI		
For the Mayor	PICCOLO, MIKE		

Distribution List

grants@spokanecity.org	sbrown@spokanecity.org

RESOLUTION NO. 2026- 0087

A resolution setting forth the City Council's endorsement of the allocation of funding to Frontier Behavioral Health with funding from a one-time FY 2026 BJA Byrne Discretionary Community Project Grant from the Department of Justice, and authorizing the execution of related contracts without further City Council review and action.

WHEREAS, In September 2026, the Department of Justice awarded a one-year award in an amount of $1,250,000 to the City of Spokane for its FY 2026 BJA Byrne Discretionary Community Projects Grant; and

WHEREAS, the grant includes funding for 911 Clinician services which will allow trained staff to respond to emergency calls in real-time through our new PSAP services, and includes funding for additional embedded Behavioral Health Clinicians; and

WHEREAS, the ability to safely de-escalate behavioral health crises, provide real-time support within our PSAP program, and divert individuals from unnecessary emergency department visits fits within the goals and scope of the grant and the priorities set by the City of Spokane; and

WHEREAS, the City of Spokane solicited open applications through RFP 6587-26 "911 Clinician Services (Re-Bid), with Frontier Behavioral Health submitting a competitive application in response to the open RFP process; and

WHEREAS, due to the abbreviated timeline of the grant execution and the previously executed open RFP process in accordance with City guidelines, the Grants Management Office is requesting that the Council approves the allocation of $568,763 for Frontier Behavioral Health for the new 911 Clinicians and up to $456,237 for additional Behavioral Health Clinicians determined through a future Request for Proposals; $124,630 for supplies and furniture; $64,500 for wages and benefits; and $35,870 for indirect costs; and

NOW THEREFORE, BE IT RESOLVED, the City Council authorizes the administration through the Grants Management Office and any other applicable staff to execute the appropriate contracts and take other action necessary to effect the above allocation, consistent with the terms of set forth in this resolution and without further action from the City Council.

PASSED the City Council this _____ day of _____, 2026.

_____

City Clerk

Approved as to form:

_____

Assistant City Attorney

Agenda Sheet for City Council:

Committee: Finance & Administration **Date:** 10/27/2026

Committee Agenda type: Discussion

Council Meeting Date: 11/18/2026

Date Rec'd	10/21/2026		
Clerk's File #	RES 2026-0088		
Cross Ref #			
Project #			
Submitting Dept	RISK MANAGEMENT	**Bid #**	
Contact Name/Phone	STEPHANIE X6376	**Requisition #**	
Contact E-Mail	SPUCKETT@SPOKANECITY.ORG		
Agenda Item Type	Resolutions		
Council Sponsor(s)	BWILKERSON PDILLON		
Sponsoring at Administrators Request	NO		
Lease? NO	**Grant Related?** NO	**Public Works?** NO	
Agenda Item Name	2027 CITY INSURANCE PREMIUMS		

Agenda Wording

A Resolution declaring the waiver of public bid requirements for the purchase of 2027 insurance premiums for specified City insurance coverages and authorizing the purchase of insurance coverages without further action.

Summary (Background)

he City is self-insured but carries excess liability coverage as part of fiscal policy to minimize financial exposure. The estimated premium cost is $4,748,209.11 Requesting approval to purchase various insurance policies for the City of Spokane for the period of 1/1/2027 -1/1/2028. Arthur J. Gallagher, the City's contracted broker has marketed the City's insurance requirements. Policy coverage information, City of Spokane Preliminary proposal estimated with increase of 11.51% over 2026.

What impacts would the proposal have on historically excluded communities?

N/A

How will data be collected, analyzed, and reported concerning the effect of the program/policy by racial, ethnic, gender identity, national origin, income level, disability, sexual orientation, or other existing disparities?

N/A

How will data be collected regarding the effectiveness of this program, policy, or product to ensure it is the right solution?

Risk Management monitors insurance and coordinates with consultant to identify best insurance coverage cost

Describe how this proposal aligns with current City Policies, including the Comprehensive Plan, Sustainability Action Plan, Capital Improvement Program, Neighborhood Master Plans, Council Resolutions, and others?

Aligns with City Fiscal policy

Council Subcommittee Review

Fiscal Impact	
Approved in Current Year Budget?	YES
Total Cost	**$** 4,748,209.11
Current Year Cost	**$**
Subsequent Year(s) Cost	**$**

Narrative

Amount		**Budget Account**
Select	**$**	**#**
Select	**$**	**#**
Select	**$**	**#**
Select	**$**	**#**
Select	**$**	**#**
Select	**$**	**#**

Funding Source	One-Time
Funding Source Type	Program Revenue

Is this funding source sustainable for future years, months, etc?

Expense Occurrence	One-Time

Other budget impacts (revenue generating, match requirements, etc.)

Budget code vary depending on department

Approvals		**Additional Approvals**	
Dept Head	STRATTON, JESSICA		
Division Director	BOSTON, MATTHEW		
Accounting Manager	DANIELS, DERREK		
Legal	DUGGAN, ANDI		
For the Mayor	PICCOLO, MIKE		

Distribution List	
spuckett@spokanecity.org	mboston@spokanecity.org
ddaniels@spokanecity.org	jnechanicky@spokanecity.org
mdean@spokanecity.org	sneal@spokanecity.org

RESOLUTION NO. 2026-0088

A Resolution declaring the waiver of public bid requirements for the purchase of 2027 insurance premiums for specified City insurance coverages and authorizing the purchase of insurance coverages without further action.

WHEREAS, the City of Spokane is self-insured but carries various insurance policies as a practice of fiscal policy; and

WHEREAS, the City annually secures coverage for property casualty, general liability, law enforcement liability, commercial auto liability, public officials' liability, damage and repair to boilers and machinery, acts of terrorism, inland marine casualty (fire truck), excess worker's compensation, cyber liability, criminal acts, and limited aviation coverage; and

WHEREAS, the nature of the insurance industry is such that utilizing normal public procurement processes are likely to result in a higher cost of premiums; and

WHEREAS, the City of Spokane does not have sufficient subject matter experts to coordinate and negotiate the various insurance coverages and premiums necessary to properly insure the City, and for this reason the City hired an insurance broker, who was selected through normal competitive procurement process and whose fees are paid separately from premiums, to negotiate premiums and coverages on behalf of the City; and

WHEREAS, it is recommended the City secure certain insurance coverages as negotiated by its insurance broker and recommended from time to time, usually on an annual basis; and

WHEREAS, as allowed by RCW 39.04.280 (1) (d), and SMC 07.06.170, the Council may by resolution waive the public bid requirements of insurance; and

WHEREAS, the City desires to waive public bid requirements for the foregoing insurance coverages, as well as other coverages that may be identified as prudent for the City to secure; and

NOW, THEREFORE, BE IT RESOLVED that the Spokane City Council hereby declares a waiver of public bid requirements for the purchase of insurance policies; and

BE IT ALSO RESOLVED that the City Council authorizes the City and Risk Management to execute contracts to secure property casualty, general liability, law enforcement liability, commercial auto liability, public officials' liability, equipment breakdown, acts of terrorism, inland marine casualty (fire truck), excess worker's compensation, cyber liability, criminal acts, and limited aviation coverages, up to amount not to exceed $4,748,209.11, and all without further approval of the City Council; and

BE IT ALSO RESOLVED that the City Council authorizes the City and Risk Management to execute contract(s) for other coverages only by separate resolution.

Passed by the City Council this ____ day of _____, 2026.

_____
City Clerk

Approved as to form:

_____
Assistant City Attorney

RESOLUTION 2026-0088
Attachment A
2027-2028 Estimated Premiums

Coverage	Carrier	Policy	Expiring Premium	Expiring Taxes/fees	Expiring Subtotal	Indication Premium	Indication Taxes/Fees	Indication Subtotal	Comments	Final Premium	Final Taxes/Fees	Final Subtotal	Comments
Property Excluding URD, WTE, WWTP, MMW	Travelers Indemnity Company	KTKCMB7Y26434626	$267,480.00	$0.00	$267,480.00	$277,000.00	$0.00	$277,000.00	3.56%	$276,622.00	$0.00	$276,622.00	3.42%
Property Upriver Dam at 70% participtation	Hartford Insurance Company	NHX0005212007	$231,508.00	$5,324.68	$236,832.68	$254,658.00	$5,857.13	$260,515.13	10.00%	$254,658.00	$5,857.13	$260,515.13	10.00%
Property Upriver Dam at 30% participtation	Starr Surplus Lines Insurance Company	26SSLDODD342771	$94,459.00	$2,172.56	$96,631.56	$103,905.00	$2,389.82	$106,294.82	10.00%	$103,905.00	$2,389.82	$106,294.82	10.00%
Property Waste to Energy at 50% participation	HSB Specialty Insurance Company	NHX0005212069	$475,000.00	$10,925.00	$485,925.00	$522,500.00	$12,017.50	$534,517.50	10.00%	$522,500.00	$12,017.50	$534,517.50	10.00%
Property Waste to Energy at 35% participation	Starr Surplus Lines Insurance Company	26SSLDODD342761	$263,717.00	$23,967.99	$287,684.99	$290,089.00	$23,672.00	$313,761.00	9.06%	$290,089.00	$23,672.00	$313,761.00	9.06%
Property Waste to Enegry at 6% participation	HDI Global Specialty	B1263EA0389726	$70,720.00	$1,626.56	$72,346.56	$77,792.00	$1,789.22	$79,581.22	10.00%	$77,792.00	$1,789.22	$79,581.22	10.00%
Property Waste to Energy at 5% participation	Houston Casualty Company	B1263EA0391726	$56,471.00	$1,298.82	$57,769.82	$62,118.10	$1,428.72	$63,546.82	10.00%	$62,118.10	$1,428.72	$63,546.82	10.00%
Property Waste to Energy at 4% participation	Korean Reinsurance Company	B1263EA0390926	$28,366.16	$652.42	$29,018.58	$31,203.00	$717.67	$31,920.67	10.00%	$31,203.00	$717.67	$31,920.67	10.00%
Property Riverside Park	Affiliated FM Insurance Company	1161724	$434,333.00	$0.00	$434,333.00	$460,000.00	$0.00	$460,000.00	5.91%	$460,665.00	$0.00	$460,665.00	6.06%
Boiler and Machinery	Liberty Mutual Fire Insurance Company	YB2L9L467836016	$107,827.00	$0.00	$107,827.00	$72,975.00	$0.00	$72,975.00	-32.32%	$72,975.00	$0.00	$72,975.00	-32.32%
Inland Marine	AGCS Marine Insurace Company (Allianz)	MXI93044289	$89,946.00	$0.00	$89,946.00	$108,000.00	$0.00	$108,000.00	20.07%	$102,974.00	$0.00	$102,974.00	14.48%
Terrorism	Liberty Surplus Insurance Corporation	5N561697001	$58,188.24	$1,308.24	$59,496.48	$56,000.00	$1,288.00	$57,288.00	-3.71%	$56,000.00	$1,288.00	$57,288.00	-3.71%
Liability Package	Safety National Casualty Corporation	XPR4068423	$892,547.00	$0.00	$892,547.00	$1,115,683.75	$0.00	$1,115,683.75	25.00%	$1,071,795.00	$0.00	$1,071,795.00	20.08%
Excess Liability $5M x $5M	Homeland Insurance Company of NY	WAGLSPO00127	$612,000.00	$14,076.00	$626,076.00	$734,400.00	$16,891.20	$751,291.20	20.00%	$624,240.00	$14,357.52	$638,597.52	2.00%
Excess Workers Compensation	Safety National Casualty Corporation	SP4067285	$356,946.00	$0.00	$356,946.00	$358,056.00	$0.00	$358,056.00	0.31%	$358,056.00	$0.00	$358,056.00	0.31%
Primary Cyber $5M	AIG Specialty Insurance Company	11668531	$77,000.00	$1,771.00	$78,771.00	$77,000.00	$1,771.00	$78,771.00	0.00%	$77,000.00	$1,771.00	$78,771.00	0.00%
Excess Cyber $5M x $5M	Homeland Insurance Company of NY	7200035250000	$45,000.00	$1,035.00	$46,035.00	$45,000.00	$1,035.00	$46,035.00	0.00%	$45,000.00	$1,035.00	$46,035.00	0.00%
Crime (3 year annual installment)	Hanover Insurance Company	BD2M24029500	$17,597.00	$0.00	$17,597.00	$17,597.00	$0.00	$17,597.00	0.00%	$17,597.00	$0.00	$17,597.00	0.00%
$5M Drone	Global Aerospace	9012554	$14,437.00	$0.00	$14,437.00	$14,875.00	$0.00	$14,875.00	3.03%	$14,875.00	$0.00	$14,875.00	3.03%
Admin Fee	Gallagher	Agency Admin Fee	$500.00	$0.00	$500.00	$500.00	$0.00	$500.00	0.00%	$500.00	$0.00	$500.00	0.00%
				Expiring total	**$4,258,200.67**		**Renewal Indication Total**	**$4,748,209.11**	11.51%		**Final Premium Total**	**$4,586,887.68**	7.72%

WA state surplus lines taxes are 2.3% of the renewal premium
Certain policies may include inspection fees

REVISED Agenda Sheet for City Council: **Committee: Finance & Administration** **Date: 10/27/2026** **Committee Agenda type: Discussion** **Committee Meeting Date:**		**Date Rec'd**	10/21/2026
		Clerk's File #	ORD C36968
		Cross Ref #	
		Project #	
Submitting Dept	MAYOR	**Bid #**	
Contact Name/Phone	ADAM 6779	**Requisition #**	
Contact E-Mail	AMCDANIEL@SPOKANECITY.ORG		
Agenda Item Type	First Reading Ordinance		
Council Sponsor(s)	BWILKERSON PDILLON		
Sponsoring at Administrators Request	YES		
Lease? NO	**Grant Related?** NO	**Public Works?** NO	
Agenda Item Name	ORDINANCE RELATED TO CERTAIN UTILITY TAXES		

Agenda Wording

An ordinance relating to Utilities, Franchise Taxes; amending Section 08.10.030 of the Spokane Municipal Code.

This Agenda Sheet was revised to add fiscal information.

Summary (Background)

The City Council approved Ordinance C36814 in 2025, which set an additional one-half percent to the base utility tax rate for water, sewer, and solid waste. Ordinance C36814 set an expiration date of December 31, 2026, for the additional one-half percent. This ordinance extends the additional one-half percent approved by Ordinance C36814 through the 2027-2028 biennial budget, expiring on December 31, 2028.

What impacts would the proposal have on historically excluded communities?

How will data be collected, analyzed, and reported concerning the effect of the program/policy by racial, ethnic, gender identity, national origin, income level, disability, sexual orientation, or other existing disparities?

There are no data collection requirements established by this ordinance.

How will data be collected regarding the effectiveness of this program, policy, or product to ensure it is the right solution?

There are no data collection requirements established by this ordinance.

Describe how this proposal aligns with current City Policies, including the Comprehensive Plan, Sustainability Action Plan, Capital Improvement Program, Neighborhood Master Plans, Council Resolutions, and others?

This ordinance extends the additional one-half percent approved by Ordinance C36814 through the 2027-2028 biennial budget, expiring on December 31, 2028.

Council Subcommittee Review

Fiscal Impact	
Approved in Current Year	YES
Total Cost	**$**
Current Year Cost	**$**
Subsequent Year(s) Cost	**$**

Narrative

This ordinance extends the additional one-half percent utility tax, which currently expires on December 31, 2026. This one-half percent generates an estimated $1.5 million in general fund revenue annually. The additional one-half percent will expire on December 31, 2028, if this ordinance is approved.

Amount		**Budget Account**
Select	**$**	**#**
Select	**$**	**#**
Select	**$**	**#**
Select	**$**	**#**
Select	**$**	**#**
Select	**$**	**#**

Funding Source	Recurring
Funding Source Type	Taxes

Is this funding source sustainable for future years, months, etc?

This ordinance extends the additional one-half percent utility tax, which currently expires on December 31, 2026. This one-half percent generates an estimated $1.5 million in general fund revenue annually. The additional one-half percent will expire on December 31, 2028, if this ordinance is approved.

Expense Occurrence	

Other budget impacts (revenue generating, match requirements, etc.)

Approvals		**Additional Approvals**	
Dept Head			
Division Director			
Accounting Manager			
Legal			
For the Mayor			

Distribution List	

ORDINANCE NO. C36968

An ordinance relating to Utilities, Franchise Taxes; amending Section 08.10.030 of the Spokane Municipal Code.

WHEREAS, in 2025 the City Council approved Ordinance C36814, which set an additional one-half percent to the base utility tax rate for water, sewer, and solid waste; and

WHEREAS, Ordinance C36814 set an expiration date of December 31, 2026, for the additional one-half percent increase; and whereas the City Council and the Administration perceive a need to extend the duration of the additional one-half percent increase approved by Ordinance C36814 through the 2027-2028 biennial budget, so that it expires on December 31, 2028;

NOW THEREFORE, the City of Spokane does ordain:

Section 1. That Section 08.10.030 of the Spokane Municipal Code is amended to read as follows:

Section 08.10.030 Business Activities Subject to Tax – Amounts ((~~– Effective 1/1/2026 to 12/31/2026~~))

A. There is levied upon and shall be collected from all persons engaging in the following utility business activities a utility gross receipts tax or license fee measured by multiplying the rate specified times the gross income as follows:

1. Selling, wheeling, or furnishing electric light or power: Six percent of gross income.

2. Selling, brokering, or furnishing natural or manufactured gas for hire: Six percent of gross income.

3. Providing solid waste collection service: Twenty-One and one-half percent of gross income.

4. Operating a public wastewater collection and treatment system: Twenty-One and one-half percent of gross income.

5. Providing telegraph service: Three and one-half percent of gross income.

6. Engaging in the telephone business: Six percent.

    a. This percentage is taken of gross revenues derived from engaging in the telephone business in the City of Spokane, including one hundred percent of the total gross revenues derived from intrastate

toll telephone services so long as the tax is not imposed on that portion of network telephone service, as defined in RCW 82.04.065, which represents charges to another telecommunications company, as defined in RCW 80.04.010, for connecting fees, switching charges or carrier access charges relating to intrastate toll telephone service, or for access to, or charges for interstate services, or charges for network telephone service that is purchased for the purpose of resale.

b. With respect to any rate affecting cellular taxation, subject also to RCW 35.21.870, no change in the tax rate affects business activities occurring before the effective date of the change, and no change will take effect sooner than sixty days following enactment of any amendatory ordinance.

c. In the case of cellular telephone service, when the service is provided to a customer roaming outside his normal use cellular network area, gross income for taxation purposes is determined consistent with the taxpayer's accounting system to the location of the originating cell site of the call, or to the location of the main cellular switching office that switched the call.

d. In the case of cellular telephone service, payments by a customer for the telephone service for telephones without a fixed location shall be allocated among taxing jurisdictions to the location of the customer's principal service address for the period during which the tax applies. There is a presumption that the service address a customer supplies to the taxpayer is accurate and current, unless the taxpayer has knowledge or reason to know the contrary.

e. If there is a dispute between the City of Spokane and another Washington city imposing a municipal telephone utility tax on cellular service of the same nature as imposed by this chapter, which dispute is limited only to the question of the correct allocation of municipal telephone taxes as between the City of Spokane and some other Washington city, the taxpayer may obtain exoneration from further tax liability, interest, and penalties due and owing to the City of Spokane with respect to the transactions under dispute by tendering the total amount of tax claimed due by the City of Spokane into an escrow account with the City treasurer or as established hereafter by appropriate interlocal agreements under the administrative sponsorship of the Association of Washington Cities. Under these arrangements, the taxpayer remains responsible to adjust its billing records promptly upon notification under procedures sanctioned through the Association of Washington Cities of the resolution of any dispute encompassed within the terms of this paragraph.

7. Selling or furnishing water for hire: Twenty-One and one-half percent of gross income.

8. Providing cable, telecommunications, or similar type service to the public, which involves the use of the right-of-way for the installation of wires, cables, fixtures, or other equipment, where not otherwise addressed in this section or prohibited by law: Six percent of gross income.

B. Subsections (A)(3), (A)(4), and (A)(7) of this section include, so far as permitted by law, the City of Spokane, and the fee or tax imposed applies to the specified business of the entire City service area, except that subsection (A)(3) of this section does not apply to operations or functions undertaken by the City occurring outside the City of Spokane and undertaken by the City as manager of a joint project pursuant to interlocal cooperation agreement.

C. The taxes imposed in subsections A (1), (2), (3), (5), (6), and (8) do not apply to amounts derived from utility business activities otherwise taxable arising from providing service to customers at locations operated or managed by an airport board pursuant to interlocal agreement arising under the authority of chapter 14.08 RCW, where such locations have been annexed to the City, said annexation taking effect on or after January 1, 2012; provided further, this exclusion does not apply to revenues derived from customers operating municipal solid waste disposal facilities or revenues otherwise taxable from municipal solid waste disposal facility operations.

D. The ((~~increased taxes~~)) tax rate imposed in sections (A)(3), (A)(4), and (A)(7) of this section ((~~are temporary increases from January 1, 2026 through December 31, 2026, after which said increases in section (A)(3), (A)(4), and (A)(7) of this section~~)) shall revert to a total tax of twenty-one (21%) percent, effective January 1 ,((~~2027~~)) 2029.

Section 2. Severability. If any section, subsection, sentence, clause, phrase or word of this ordinance should be held to be invalid or unconstitutional by a court of competent jurisdiction, such invalidity or unconstitutionality thereof shall not affect the validity or constitutionality of any other section, subsection, sentence, clause, phrase or word of this ordinance.

Section 3. Clerical Errors. Upon approval by the city attorney, the city clerk is authorized to make necessary corrections to this ordinance, including scrivener's errors or clerical mistakes; references to other local, state, or federal laws, rules, or regulations; or numbering or referencing of ordinances or their sections and subsections.

PASSED by the City Council on _____

Council President

Attest:

City Clerk

Approved as to form:

City Attorney

Mayor

Date

Effective Date

Agenda Sheet for City Council: **Committee:** Finance & Administration **Date:** 10/27/2026 **Committee Agenda type:** Discussion		**Date Rec'd**	10/20/2026
		Clerk's File #	ORD C36969
		Cross Ref #	FIN 2026-0001
Council Meeting Date: 11/18/2026		**Project #**	
Submitting Dept	FINANCE & ADMINISTRATION	**Bid #**	
Contact Name/Phone	JACOB MILLER X6421	**Requisition #**	
Contact E-Mail	JMILLER@SPOKANECITY.ORG		
Agenda Item Type	Hearings		
Council Sponsor(s)	BWILKERSON PDILLON		
Sponsoring at Administrators Request	NO		
Lease? NO	**Grant Related?** NO	**Public Works?** NO	
Agenda Item Name	CIP ORDINANCE		

Agenda Wording

AN ORDINANCE OF THE CITY OF SPOKANE, WASHINGTON, ADOPTING A SIX-YEAR CITYWIDE CAPITAL IMPROVEMENT PROGRAM FOR THE YEARS 2027 THROUGH 2032. AND AMENDING THE CITYWIDE CAPITAL IMPROVEMENT PROGRAM (CIP) AS REFERENCED IN APPENDIX C OF THE CITY OF SPOKANE COMPREHENSIVE PLAN

Summary (Background)

In accordance with the State Growth Management Act and the City of Spokane's Municipal Code Chapter 07.17, the City must adopt and annually update a Citywide Six-Year Capital Improvement Program. The Program must be updated annually as part of the budget process. The first two years of the Capital Improvement Program are reflected in the 2027-28 biennium budget. An update on the CIP will be delivered to the City Council on October 27, 2026. A Plan Commission workshop was held on September 23. 2026, and the Plan Commission hearing was held on October 14, 2026.

What impacts would the proposal have on historically excluded communities?

N/A

How will data be collected, analyzed, and reported concerning the effect of the program/policy by racial, ethnic, gender identity, national origin, income level, disability, sexual orientation, or other existing disparities?

N/A

How will data be collected regarding the effectiveness of this program, policy, or product to ensure it is the right solution?

N/A

Describe how this proposal aligns with current City Policies, including the Comprehensive Plan, Sustainability Action Plan, Capital Improvement Program, Neighborhood Master Plans, Council Resolutions, and others?

N/A

Council Subcommittee Review

Fiscal Impact	
Approved in Current Year Budget?	N/A
Total Cost	**$**
Current Year Cost	**$**
Subsequent Year(s) Cost	**$**

Narrative

Amount		**Budget Account**
Select	**$**	**#**
Select	**$**	**#**
Select	**$**	**#**
Select	**$**	**#**
Select	**$**	**#**
Select	**$**	**#**

Funding Source	N/A
Funding Source Type	Select

Is this funding source sustainable for future years, months, etc?

Expense Occurrence	N/A

Other budget impacts (revenue generating, match requirements, etc.)

Approvals		**Additional Approvals**	
Dept Head	STRATTON, JESSICA		
Division Director	STRATTON, JESSICA		
Accounting Manager	DANIELS, DERREK		
Legal	DUGGAN, ANDI		
For the Mayor	PICCOLO, MIKE		

Distribution List	
budget@spokanecity.org	jstratton@spokanecity.org
mboston@spokanecity.org	sneal@spokanecity.org

ORDINANCE NO. C36969

AN ORDINANCE OF THE CITY OF SPOKANE, WASHINGTON, ADOPTING A SIX-YEAR CITYWIDE CAPITAL IMPROVEMENT PROGRAM FOR THE YEARS 2027 THROUGH 2032. AND AMENDING THE CITYWIDE CAPITAL IMPROVEMENT PROGRAM (CIP) AS REFERENCED IN APPENDIX C OF THE CITY OF SPOKANE COMPREHENSIVE PLAN.

WHEREAS, in accordance with the Growth Management Act ("GMA"), the City of Spokane previously adopted a Comprehensive Plan that includes a Capital Facilities Plan ("CFP") that includes an inventory, analysis, and a six-year financing plan for needed capital facilities otherwise referred to as the Six-Year Capital Improvement Program; and

WHEREAS, the City formed a Capital Improvement Program Team which has assembled proposed amendments to the CIP, which amendments consist of an updated six-year plan (years 2027 through 2032) identifying the proposed locations and capacities of expanded or new capital facilities and a plan to finance such capital facilities within projected funding capacities (the "Six-Year Citywide Capital Improvement Program" or "CIP"); and

WHEREAS, the City previously adopted the Six-Year Street Program (RCW 35.77.010) on June 15, 2026 by Council Resolution 2026-0040, and that program is incorporated into the CIP; and

WHEREAS, GMA provides that proposed amendments to a comprehensive plan may be considered by the governing body of a city no more frequently than once per year, but further provides that amendments to the capital facilities element of a comprehensive plan may be considered outside of this annual process where the amendment is considered concurrently with the adoption or amendment of a city budget; and

WHEREAS, on September 23, 2026, the City's responsible official issued a Determination of Non-Significance for the CIP; and

WHEREAS, the Spokane City Plan Commission conducted a public workshop regarding the CIP on September 23, 2026; and

WHEREAS, after providing appropriate public notices, on October 14, 2026, the Spokane City Plan Commission, conducted a public hearing to take testimony on the CIP, and at the close of the hearing, and after considering public input, the SEPA determination, and required decision criteria, found that the CIP is consistent with the Comprehensive Plan and voted unanimously to recommend that the City Council approve the CIP; and

Now, Therefore,

The City of Spokane does ordain:

Section 1. Amendment. The City of Spokane Comprehensive Plan and its capital facilities element are hereby amended to reflect a six-year plan for capital improvement projects (2027-2032), as set forth in the attached Citywide Capital Improvement Program (2027-2032).

A. Any vehicle procurement must comply with Spokane Municipal Code 07.06.175A regarding the procurement of clean fuel vehicles.

Section 2. Authorization to Seek Funding. City staff are authorized to apply for state and federal grants and low-interest loans in support of the projects identified in the Citywide Capital Improvement Program (2027-2032).

Section 3. Effective Date. This ordinance shall take effect and be in force on _____.

PASSED BY THE CITY COUNCIL ON _____.

_____
Council President

Attest:

_____
City Clerk

Approved as to Form:

_____
Assistant City Attorney

_____
Mayor

_____
Date

Agenda Sheet for City Council:

Committee: Urban Experience **Date:** 10/15/2026

Committee Agenda type: Discussion

Council Meeting Date: 11/11/2026

Date Rec'd	10/7/2026		
Clerk's File #	RES 2026-0078		
Cross Ref #			
Project #			
Submitting Dept	DEVELOPMENT SERVICES	**Bid #**	
Contact Name/Phone	ELDON BROWN 6305	**Requisition #**	
Contact E-Mail	EBROWN@SPOKANECITY.ORG		
Agenda Item Type	Resolutions		
Council Sponsor(s)	KKLITZKE ZZAPPONE		
Sponsoring at Administrators Request	NO		
Lease? NO	**Grant Related?** NO	**Public Works?** YES	
Agenda Item Name	RESOLUTION TO SET HEARING - VACATING PORTIONS OF DALTON AVE & OAK		

Agenda Wording

Resolution to set Hearing for the right-of-way vacation of portions of Dalton Ave and Oak Street

Summary (Background)

Property owners adjacent to these portions of right-of-way have petitioned City Council for a vacation. The existing ROW is unimproved and the property owners wish to vacate in order to accommodate future housing across the site. Resolution to set Hearing - 11/11/26 Public Hearing - 12/16/2026

What impacts would the proposal have on historically excluded communities?

How will data be collected, analyzed, and reported concerning the effect of the program/policy by racial, ethnic, gender identity, national origin, income level, disability, sexual orientation, or other existing disparities?

How will data be collected regarding the effectiveness of this program, policy, or product to ensure it is the right solution?

Describe how this proposal aligns with current City Policies, including the Comprehensive Plan, Sustainability Action Plan, Capital Improvement Program, Neighborhood Master Plans, Council Resolutions, and others?

Council Subcommittee Review

Fiscal Impact	
Approved in Current Year Budget?	
Total Cost	**$**
Current Year Cost	**$**
Subsequent Year(s) Cost	**$**

Narrative

Amount		**Budget Account**
Revenue	**$** 157,180.56	**#** 0320-49199-99999-39510
Select	**$**	**#**
Select	**$**	**#**
Select	**$**	**#**
Select	**$**	**#**
Select	**$**	**#**

Funding Source

Funding Source Type Select

Is this funding source sustainable for future years, months, etc?

Expense Occurrence

Other budget impacts (revenue generating, match requirements, etc.)

Approvals		**Additional Approvals**	
Dept Head	PALMQUIST, TAMI		
Division Director	MACDONALD, STEVEN		
Accounting Manager	ZOLLINGER, NICHOLAS		
Legal	DUGGAN, ANDI		
For the Mayor	PICCOLO, MIKE		

Distribution List

	ebrown@spokanecity.org
mnilsson@spokanecity.org	tpalmquist@spokanecity.org
edjohnson@spokanecity.org	akiehn@spokanecity.org
nzollinger@spokanecity.org	

R E S O L U T I O N 2026-0078

WHEREAS, on July 14, 2026, the Spokane City Council received a petition for the vacation of portions of Dalton Avenue, Oak Street, and an adjacent alleyway, in the City of Spokane from owners having an interest in real estate abutting the above right-of-way; and

WHEREAS, it was determined that the petition was signed by the owners of more than two-thirds of the property abutting Dalton Avenue, Oak Street, and an adjacent alleyway, in the City of Spokane; and

WHEREAS, the City Council desires to set a time and date through this resolution to hold a public hearing on the petition to vacate the above property in the City of Spokane;

NOW, THEREFORE,

The City Council does hereby resolve the following:

That hearing on the petition to vacate Dalton Avenue, Oak Street, and an adjacent alleyway, in the City of Spokane will be held in front of the City Council at 6:00 P.M. or as soon thereafter as possible on **December 16, 2026**, and the City Clerk of the City of Spokane is instructed to proceed with all proper notice according to State law.

ADOPTED by the Spokane City Council, this _____ day of _____, 2026.

_____
City Clerk

Approved as to form:

_____
Assistant City Attorney

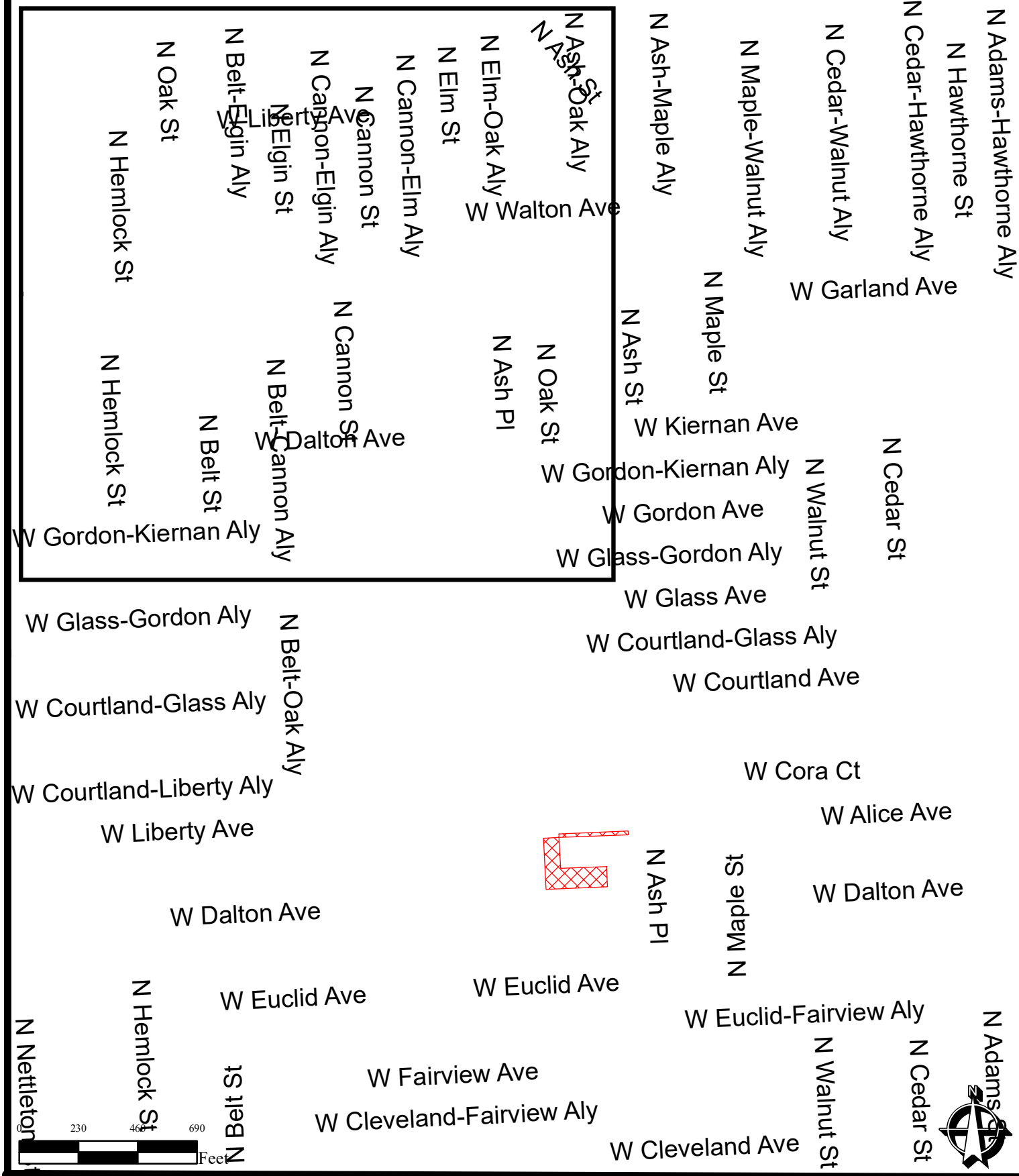

Portions of Right-of-Way Applied for
1) - Alley in Block 21 of Spring Hill Addition
2) - Oak St between the S line of the Alley in Block 21 and the S line of Dalton Ave
3) - Dalton Ave between the E line of Oak St and the E line of Lot 10 of Block 21

Legend

Proposed Vacation

THIS IS NOT A LEGAL DOCUMENT:
The information shown on this map is compiled from various sources and is subject to constant revision. Information shown on this map should not be used to determine the location of facilities in relationship to property lines, section lines, streets, etc.

Printed by: edjohnson Print date: 7/14/2026