TABLE OF CONTENTS

CITY OF SPOKANE STANDARD PLANS

B-101B = Revised Standard Plan
***W-108A = New Standard Plan

Plan No.	Plan Title	Current Plan Date
SECT V:	**LANDSCAPING**	
V-101	Tree Planting Details All Types, Forms, and Species	5/15
V-102	Shrub Planting Details All Types, Forms, and Species	5/15
V-103	Irrigation System Details	2/86
V-104	Sprinkler System Control Valving	1/17

Back To Section V - TOC

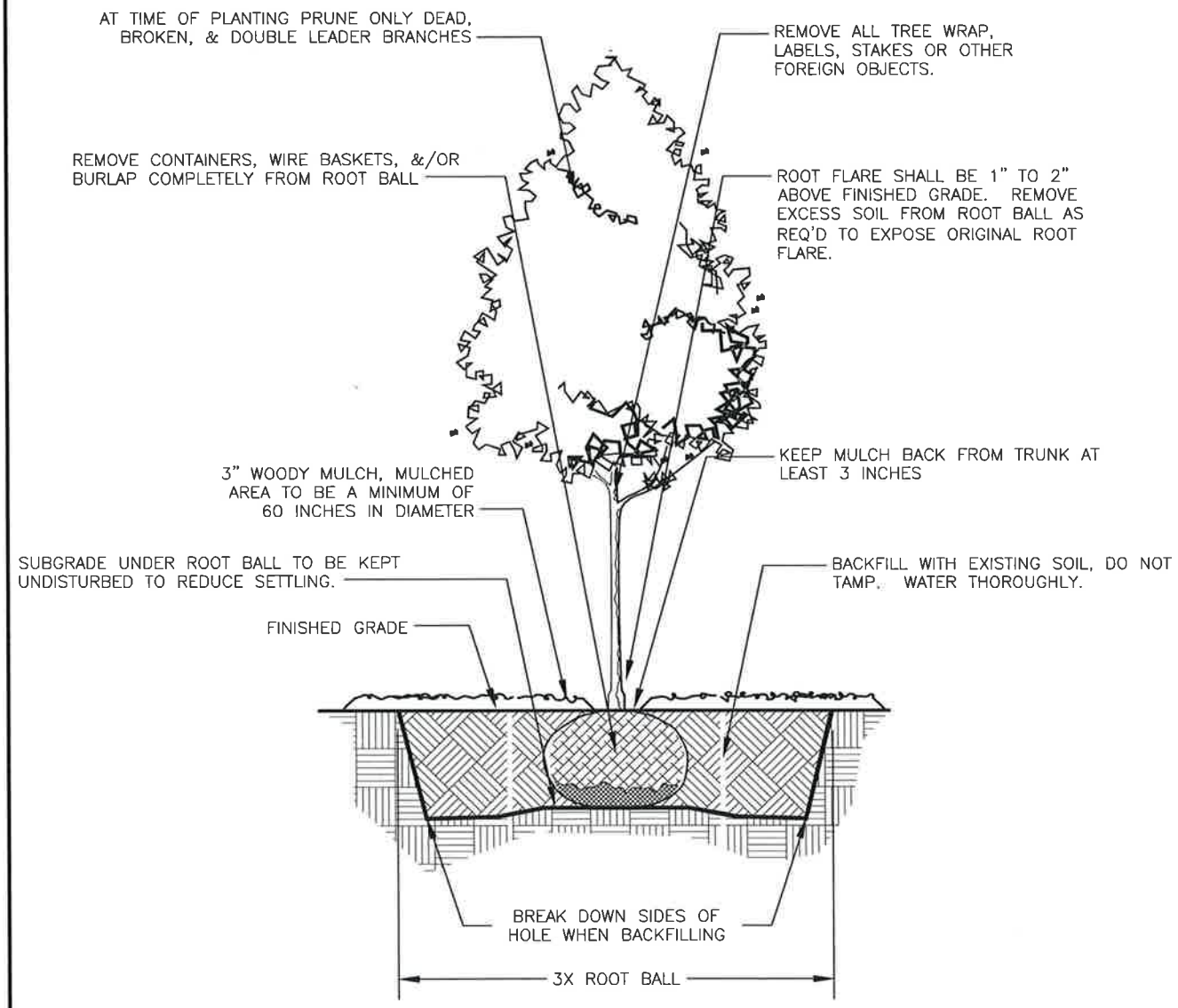

NOTES:

1. TREES BURIED TOO DEEP, OR WITHOUT EXPOSING ROOT FLARE WILL BE REJECTED & SHALL BE REMOVED & REPLANTED AT PROPER DEPTH.
2. ALL 'ADVENTITIOUS ROOTS' AND 'SUCKERS' SHALL BE PRUNED AWAY PRIOR TO PLANTING.
3. DEVIATIONS FROM THIS DETAIL SHALL ONLY BE ALLOWED WITH PERMISSION FROM THE CITY ARBORIST.
4. TREES NOT PLANTED IN CONFORMITY WITH THIS DETAIL WILL BE REJECTED BY THE CITY ARBORIST. REPLACEMENT OF REJECTED TREES WILL BE DONE AT THE CONTRACTOR'S EXPENSE & NOT BY THE CITY OF SPOKANE.
5. LOCATIONS OF TREES TO MEET THE REQUIREMENTS OF DESIGN STANDARDS 3.5–2. ≥15 FT FROM DRIVEWAYS, ≥10 FT FROM DRAINAGE INLETS, ≥ 20 FT FROM DRYWELLS, NOT OBSTRUCT TRAFFIC SIGNS OR SIGHT TRIANGLES, AND 15 FT FROM UNDERGROUND UTILITIES
6. AFTER PLANTING, IF TREES ARE UNSTABLE, STAKING MAY BE USED BUT ONLY AS NECESSARY. AT 6 MONTHS, ALL STAKING MATERIAL SHALL BE REMOVED. IF TREE IS STILL UNSTABLE, AFTER 6 MONTHS, TREE MAY NEED TO BE REPLACED.

APPROVED BY

ENGINEERING OPERATIONS MANAGER KYLE TWOHIG

PRINCIPAL ENGINEER, CONST. KENNETH M. BROWN, P.E.

ADOPTED: 2/1986
REVISED: 05/2015
SUPERSEDES: 04/2012
CHECKED BY: SJS
SCALE: NTS
REVISED BY: MLD

TREE PLANTING DETAILS

ALL TYPES, FORMS AND SPECIES

SPOKANE

ENGINEERING SERVICES
CITY OF SPOKANE, WASHINGTON

STANDARD PLAN No. **V–101**

Back To Section V - TOC

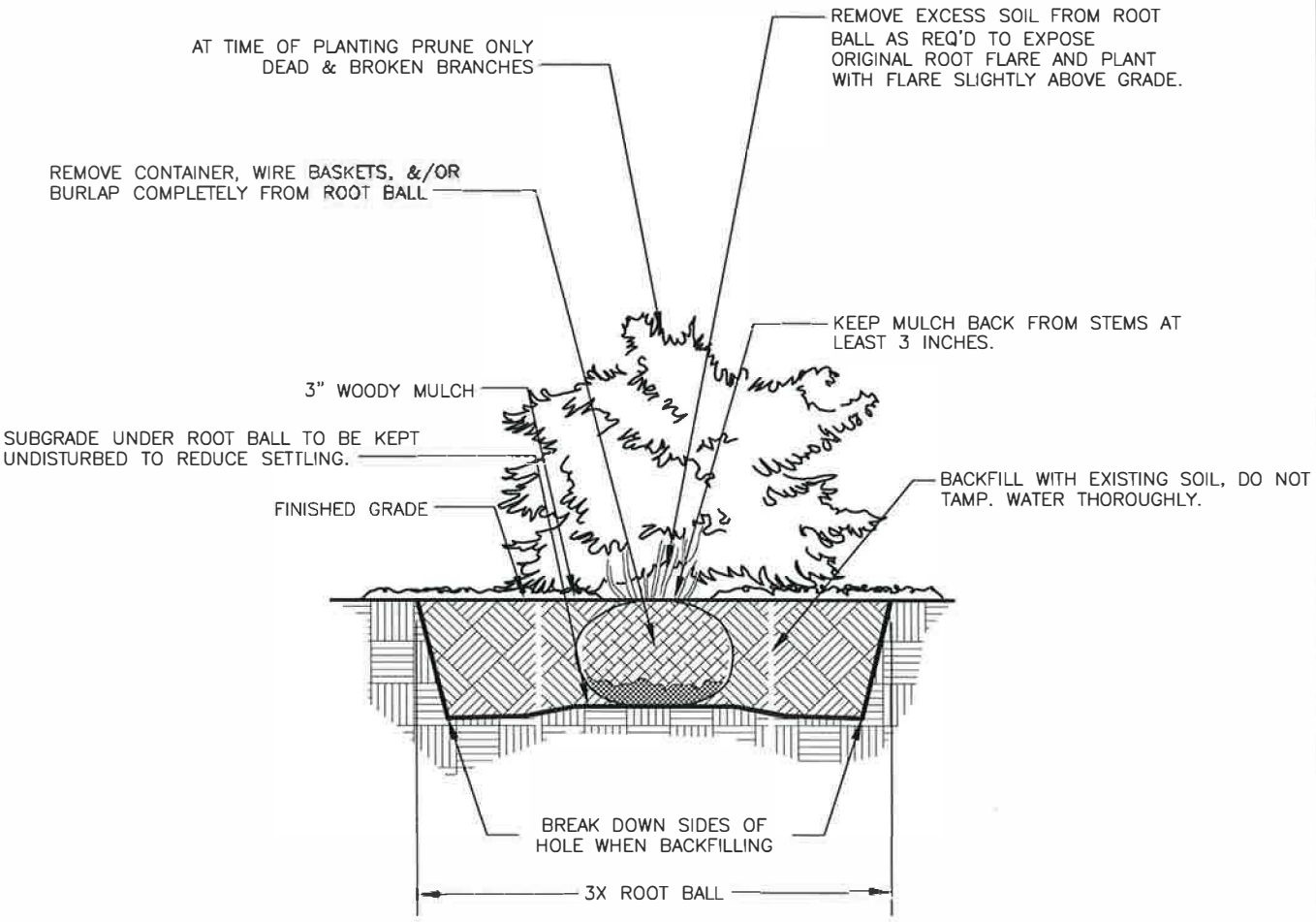

NOTES:

1. SHRUBS BURIED TOO DEEP, OR WITHOUT EXPOSING ROOT FLARE WILL BE REJECTED & SHALL BE REMOVED & REPLANTED AT PROPER DEPTH.
2. DEVIATIONS FROM THIS DETAIL SHALL ONLY BE ALLOWED WITH PERMISSION FROM THE CITY ARBORIST.
3. SHRUBS NOT PLANTED IN CONFORMITY WITH THIS DETAIL WILL BE REJECTED BY THE CITY ARBORIST. REPLACEMENT OF REJECTED SHRUBS WILL BE DONE AT THE CONTRACTOR'S EXPENSE & NOT BY THE CITY OF SPOKANE.

APPROVED BY

ENGINEERING OPERATIONS MANAGER KYLE TWOHIG

PRINCIPAL ENGINEER, CONST. KENNETH M. BROWN, P.E.

ADOPTED:	2/1986
REVISED:	05/2015
SUPERSEDES:	04/2012
CHECKED BY:	SJS
SCALE:	NTS
REVISED BY:	MLD

SHRUB PLANTING DETAILS

ALL TYPES, FORMS AND SPECIES

SPOKANE

ENGINEERING SERVICES
CITY OF SPOKANE, WASHINGTON

STANDARD PLAN No. **V-102**

Back To Section V - TOC

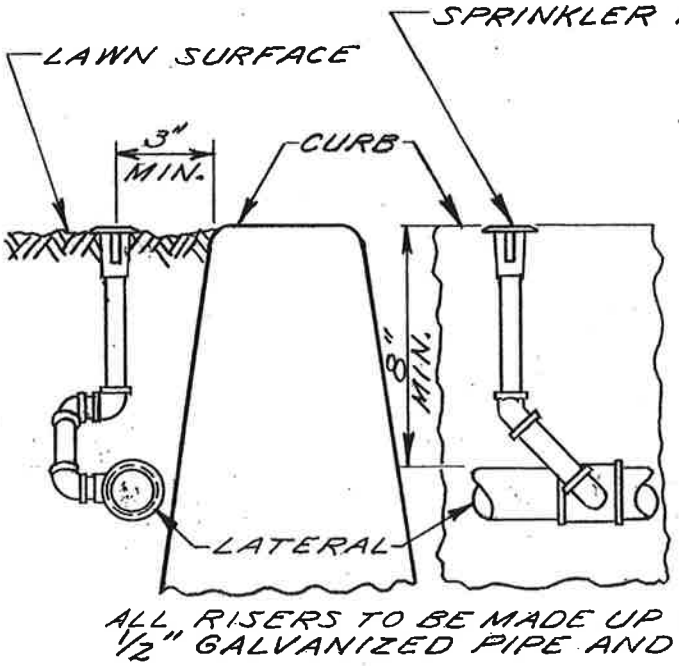

POP-UP SPRINKLER DETAIL

NOTE: STREET ELBOWS AND CLOSE NIPPLES WILL NOT BE ALLOWED.

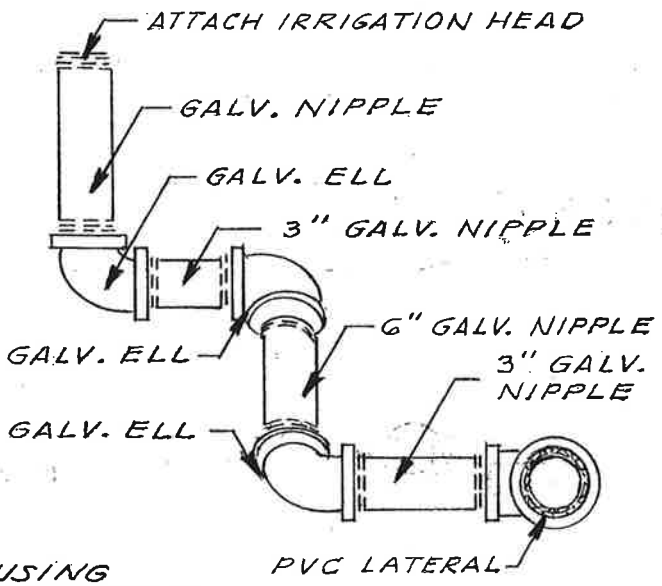

TRIPLE SWING JOINTS

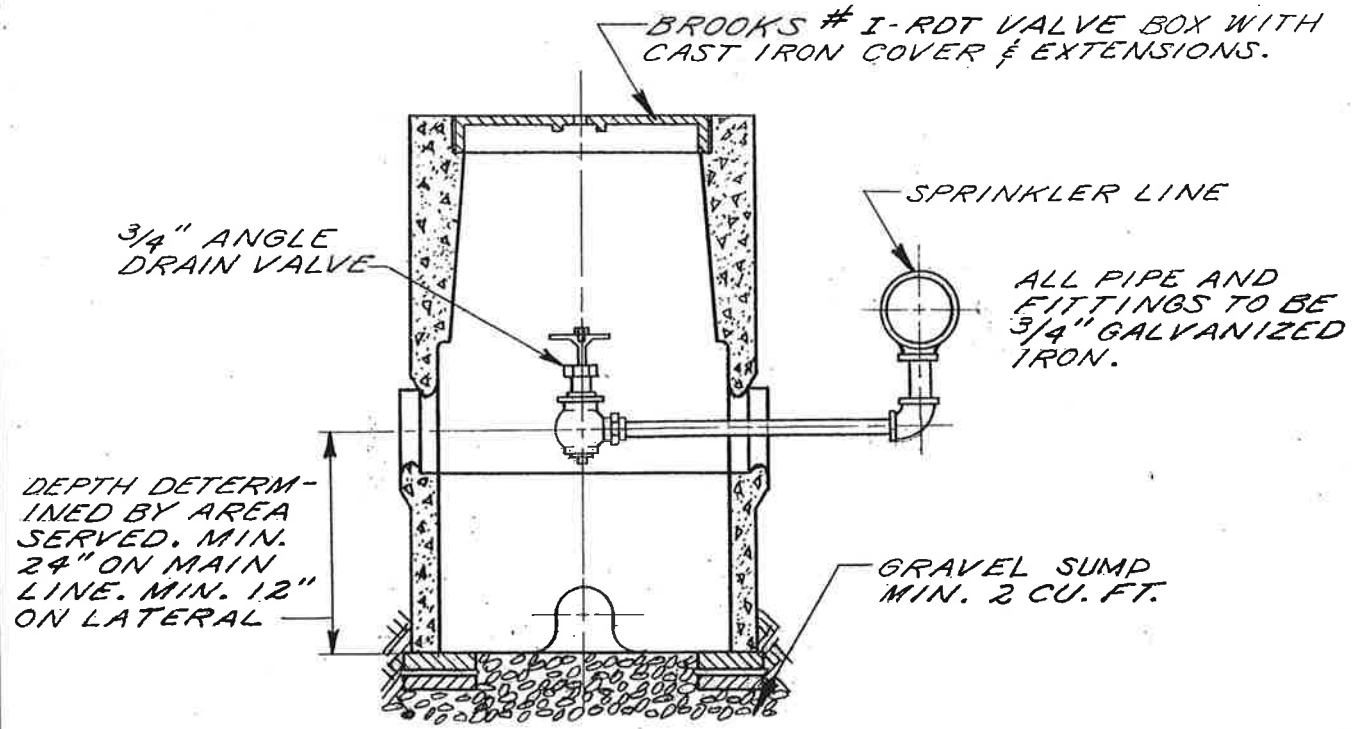

DRAIN VALVE DETAIL

APPROVED BY	SCALE NONE	IRRIGATION SYSTEM DETAILS	
CITY ENGR. [signature]	ADOPTED 2-86		
CH. DES. ENGR. [signature]	REVISED	DEPT. OF PUBLIC WORKS ENGR. DIVISION SPOKANE, WN.	STANDARD PLAN No. V-103

Back To Section V - TOC

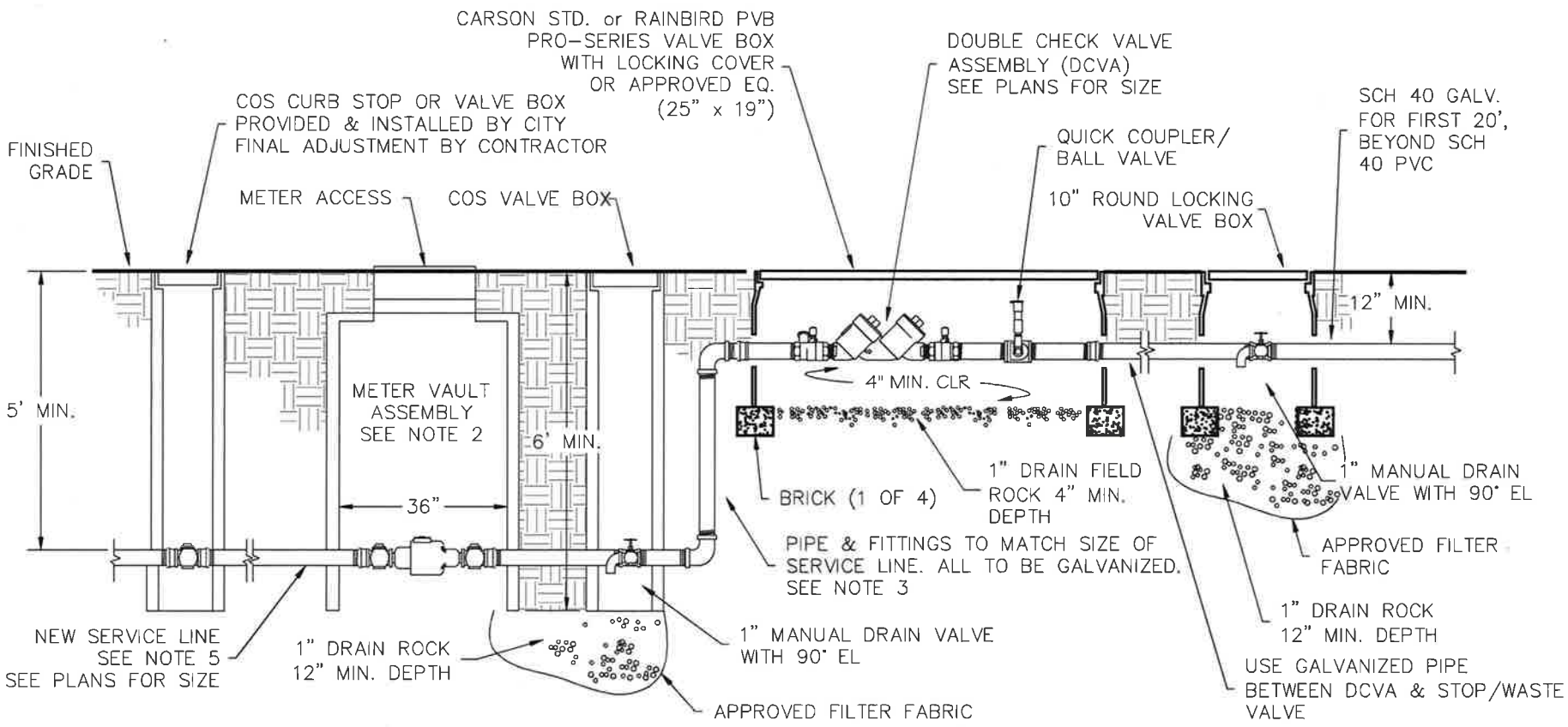

NOTES:

1. CONTRACTOR IS TO PROVIDE ALL EXCAVATION AND BACKFILL FOR CITY FORCES TO SUPPLY AND INSTALL, UPON PAYMENT OF FEES, THE TAPPING SADDLE, CORP STOP, SERVICE LINE, CURB STOP, METER VAULT, METER & ISOLATION VALVES INSIDE METER VAULT. TRENCH EXCAVATION AND BACKFILL PAID UNDER BID ITEM TRENCH EXCAVATION FOR WATER SERVICE TAP.
2. CONTRACTOR IS FULLY RESPONSIBLE FOR FURNISHING AND INSTALLING ALL PIPE & FITTINGS DOWNSTREAM OF THE METER VAULT.
3. ALL PIPE & FITTINGS DOWNSTREAM OF THE METER TO THE MAINLINE TO BE GALVANIZED SCH. 40.
4. CITY TO SUPPLY AND INSTALL PRV INSIDE OF METER VAULT WHERE PRESSURES EXCEED 80 PSI.
5. SEE IRRIGATION DESIGN GUIDELINES FOR ADDITIONAL INSTALLATION INFORMATION.

APPROVED BY

ENGINEERING OPERATIONS MANAGER KYLE TWOHIG

CITY ENGINEER DANIEL ALBERT BULLER, P.E.

ADOPTED: 01/2017
REVISED:
SUPERSEDES:
CHECKED BY: DAB
SCALE: NTS
DWG./REV BY: RJS

2" AND SMALLER METER/BACKFLOW ASSEMBLY FOR IRRIGATION SYSTEMS

SPOKANE ENGINEERING SERVICES
CITY OF SPOKANE, WASHINGTON

STANDARD PLAN No. V-104