TABLE OF CONTENTS

CITY OF SPOKANE STANDARD PLANS

B-101B = Revised Standard Plan
***W-108A = New Standard Plan

Plan No.	Plan Title	Current Plan Date
SECT B:	**STORM DRAINAGE**	
B-2A	Directional Vaned Grate	5/07
B-2B	Bi-Directional Vaned Grate	5/07
B-2C	Grate Guard	5/07
B-3A	Frame and Grate for CB – Type 1	4/13
B-3B	Frame and Grate for CB – Type 3	4/13
B-3C	Frame and Grate for Inlet – Type 3	4/13
B-15A	Proper Method for Determining Ground Water Height	2/86
B-18C	Utility Trench Backfill – Pipe Zone	2/17
B-18D	Utility Trench Backfill – Above Pipe Zone	4/12
B-18E	Utility Trench Backfill – Requirements using CDF	1/17
B-19	Cut-Off Wall	1/17
B-101B	Catch Basin – Type 0.	1/17
B-101C	Catch Basin – Type 1	4/18
B-101D	Catch Basin – Type 2	1/17
B-101D1	Catch Basin – Type 2 w/ Conversion Unit for WSDOT Vaned Grates	1/17
B-101D2	Conversion Unit – Retro Fit for Catch Basin Type 2	9/10
B-101D3	Conversion Unit Notes – Including Bar List & Bending Diagram	9/10
B-101E	Catch Basin – Type 3.	4/18
B-101F	Catch Basin – Type 4.	4/18
B-102C	Drywell – Type 1	1/17
B-102D	Drywell – Type 2	1/17
B-102F	Bio-Infiltration Swale w/ Overflow Structure	4/12
B-105	Catch Basin Cover – Type 2 with Sill Block	7/02
B-111	Absorption Trench Detail	1/17
B-112	Manhole Frame and Cover	5/07
B-112A	Manhole Frame and Cover – 3 Point Boltdown	6/95
B-113	Catch Basin Frame and Grate	2/90
B-114	Catch Basin Frame and Cover – Type 2	4/04
B-117	Concrete Pipe Anchor	6/92
B-117A	Corrugated Pipe Anchor	6/92
B-119	Grate Inlet Structure – Type 3	1/17
B-120	Outlet Trap	1/17
B-122	Catch Basin, Drywell and Manhole Base Slab and Foundation Details	12/98
B-123	Adjustment Section – Grade Rings (Risers)	1/17

Back to Section B - TOC

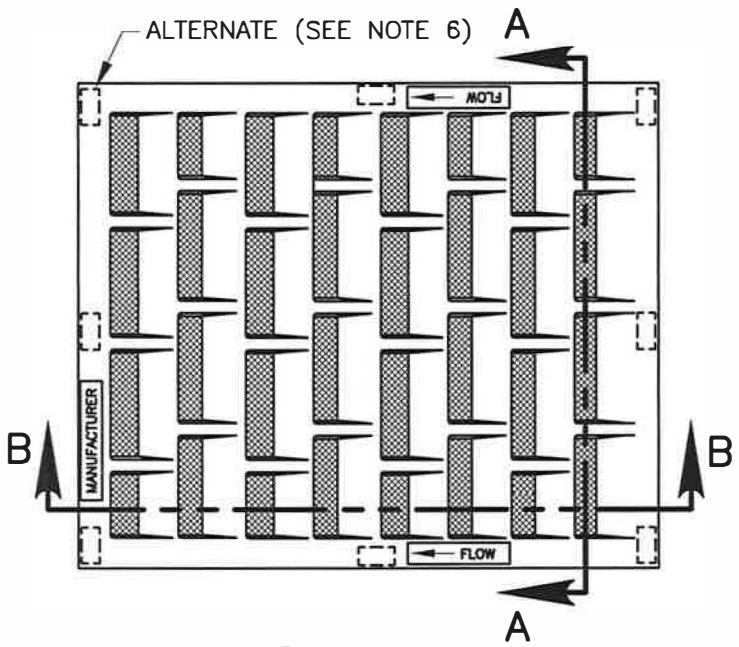

TOP VIEW

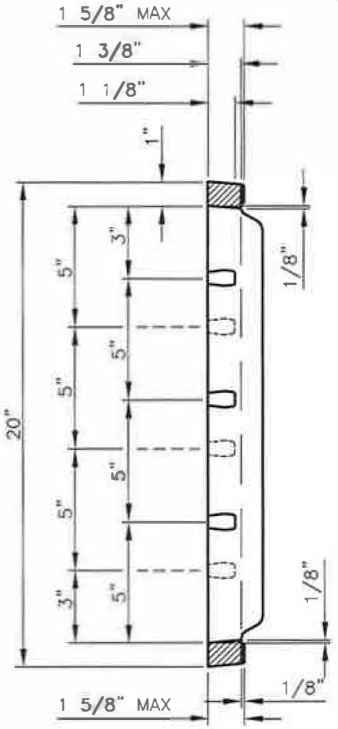

SECTION A–A

NOTES:

1. THE NAME OF THE MANUFACTURER SHALL BE EMBOSSED ON THE TOP SURFACE OF EACH GRATE. LETTERING TO BE RECESSED 1/16".
2. FRAME SHALL BE GRAY IRON CONFORMING TO A.S.T.M. A48–90, GRADE 30. THE GRATE SHALL BE DUCTILE IRON CONFORMING TO A.S.T.M. A536–84 GRADE 80–55–06.
3. DIMENSIONS SHALL HAVE ±1/16" TOLERANCE, EXCEPT AS NOTED.
4. EDGES SHALL HAVE 1/8" RADIUS, 1/8" CHAMFER OR COMPLETE DEBURRING.
5. WELDING IS NOT PERMITTED.
6. AS AN ALTERNATE, EIGHT PADS 1 1/2" x 3/4" x 1/8", INTEGRALLY CAST WITH THE GRATE MAY BE USED.
7. WHEREVER PRACTICAL & FEASIBLE, USE GRATE SHOWN ON THIS SHEET IN CONTINUOUS GRADE CONDITIONS.

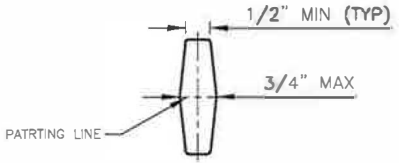

SECTION C–C

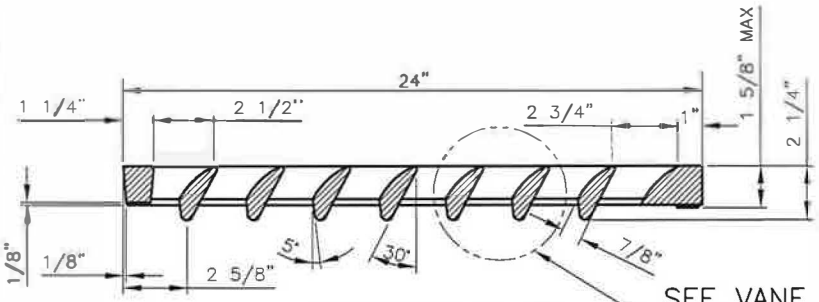

SECTION B–B

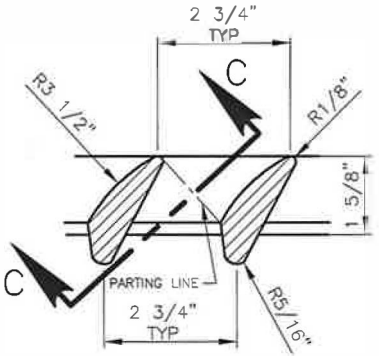

VANE DETAIL

APPROVED BY Elden Brown For SCOTT D. EGGER, P.E. ACTING DIRECTOR, ENGINEERING SERVICES PRINCIPAL ENGINEER, DESIGN GARY S. NELSON, P.E.	ADOPTED: 05/2007 REVISED: SUPERSEDES: CHECKED BY: JAG SCALE: NTS DWG/REV. BY: PCF	DIRECTIONAL VANED GRATE ENGINEERING SERVICES CITY OF SPOKANE, WASHINGTON
		STANDARD PLAN No. B–2A

Back to Section B - TOC

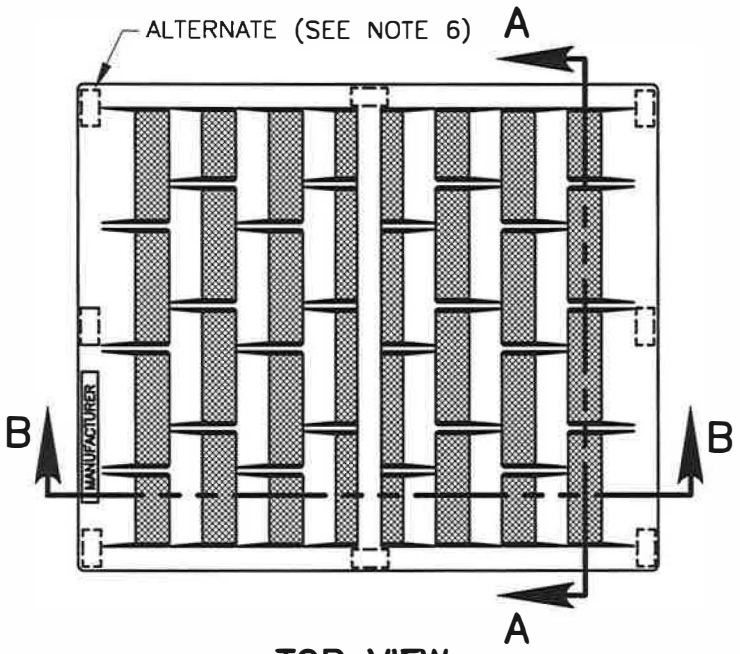

TOP VIEW

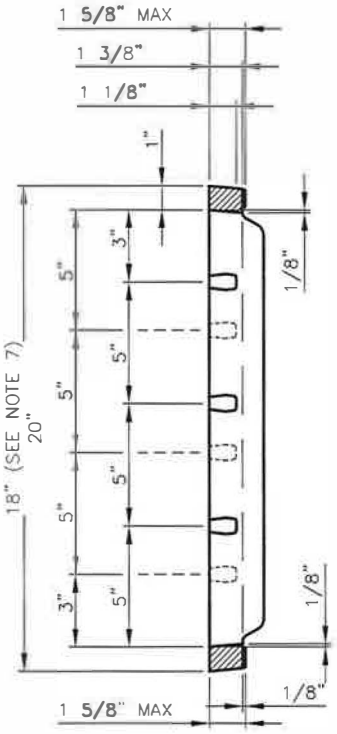

SECTION A–A

NOTES:

1. THE NAME OF THE MANUFACTURER SHALL BE EMBOSSED ON THE TOP SURFACE OF EACH GRATE. LETTERING TO BE RECESSED 1/16".
2. FRAME SHALL BE GRAY IRON CONFORMING TO A.S.T.M. A48–90, GRADE 30. THE GRATE SHALL BE DUCTILE IRON CONFORMING TO A.S.T.M. A536–84 GRADE 80–55–06.
3. DIMENSIONS SHALL HAVE ±1/16" TOLERANCE, EXCEPT AS NOTED.
4. EDGES SHALL HAVE 1/8" RADIUS, 1/8" CHAMFER OR COMPLETE DEBURRING.
5. WELDING IS NOT PERMITTED.
6. AS AN ALTERNATE, EIGHT PADS 1 1/2" x 3/4" x 1/8", INTEGRALLY CAST WITH THE GRATE MAY BE USED.
7. DIMENSION FOR THE GRATE ASSOCIATED WITH CATCH BASIN TYPE 3. OTHER DIMENSIONS, THE NUMBER & POSITION OF THE VANES WILL ALSO VARY.
8. WHEREVER PRACTICAL & FEASIBLE, USE GRATE SHOWN ON THIS SHEET IN SUMP CONDITIONS.

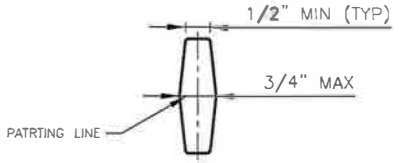

SECTION C–C

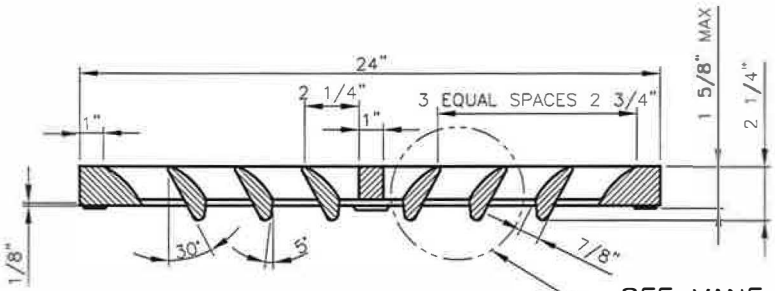

SECTION B–B

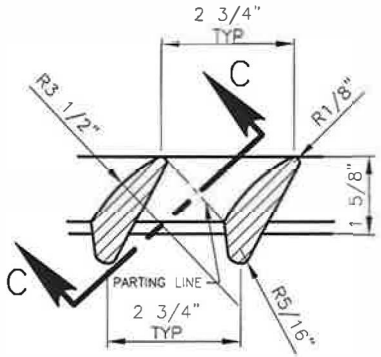

VANE DETAIL

APPROVED BY		BI–DIRECTIONAL VANED GRATE	
Elden Brown for SCOTT D. EGGER, P.E. ACTING DIRECTOR, ENGINEERING SERVICES	ADOPTED: 05/2007 REVISED: SUPERSEDES: CHECKED BY: JAG SCALE: NTS DWG/REV. BY: PCF	ENGINEERING SERVICES CITY OF SPOKANE, WASHINGTON	STANDARD PLAN No. B–2B
PRINCIPAL ENGINEER, DESIGN GARY S. NELSON, P.E.			

Back to Section B - TOC

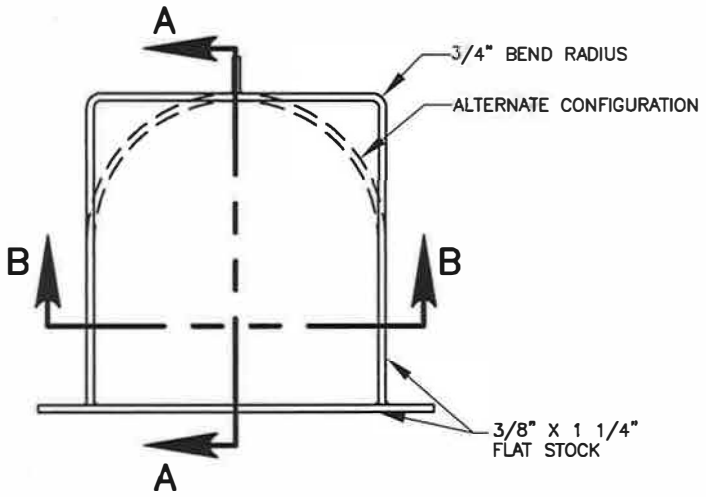

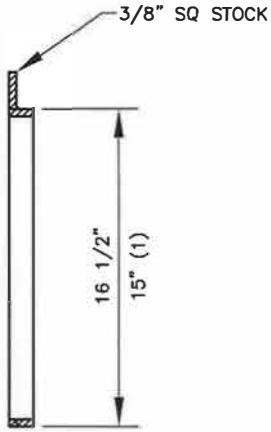

SECTION A–A

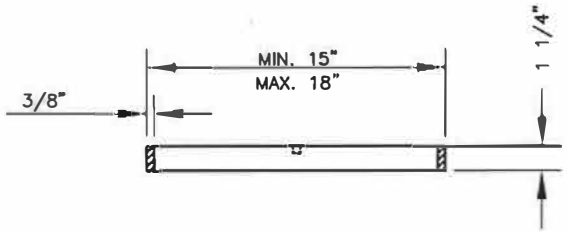

SECTION B–B

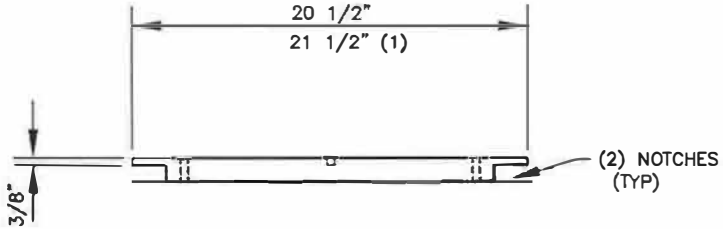

END VIEW

(1) DIMENSION FOR FRAME ASSOCIATED WITH CATCH BASIN TYPE 3

APPROVED BY

DIRECTOR, ENGINEERING SERVICES — TOM L. ARNOLD, P.E.

PRINCIPAL ENGINEER, DESIGN — GARY S. NELSON, P.E.

ADOPTED: 05/2007
REVISED:
SUPERSEDES:
CHECKED BY: JAG
SCALE: NTS
DWG/REV. BY: PCF/RDC

GRATE GUARD

ENGINEERING SERVICES
CITY OF SPOKANE, WASHINGTON

STANDARD PLAN No. B–2C

Back to Section B - TOC

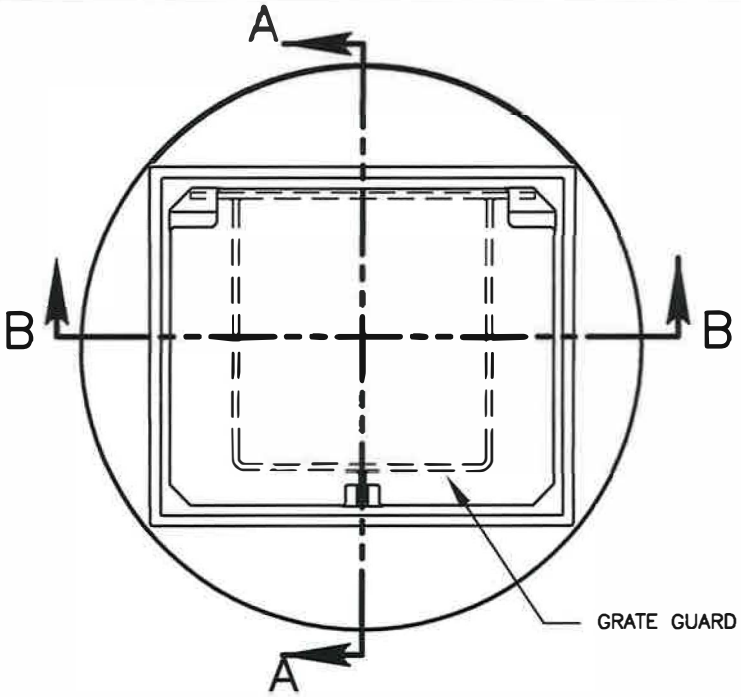

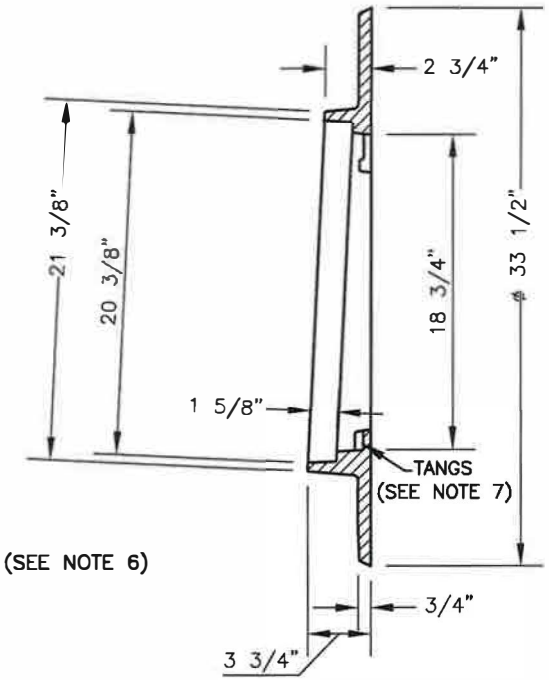

SECTION A–A

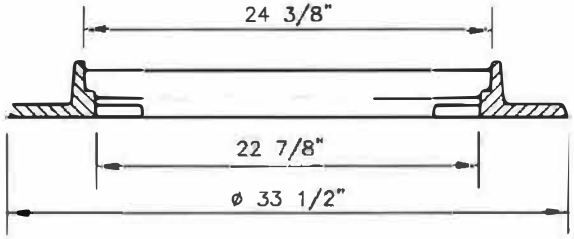

SECTION B–B

NOTES:

1. SEE SECTIONS 9–05.15(1) AND 9–05.15(2)
2. FRAME: GRAY IRON CASTING, SEE SECTION 9–06.9.
3. GRATE: DUCTILE IRON CASTING, SEE SECTION 9–06.14.
4. FOUNDRY NAME, DATE, HEAT NUMBER AND MATERIAL IN RAISED LETTERS ON INTERIOR OF EACH CASTING.
5. TOLERANCES ± 0.0625".
6. GRATE GUARD REQ'D. SEE CITY STD PLAN B–2C.
7. CONTINUOUS LIP ON BOTTOM OF TANGS TO REST GRATE GUARD TAB ON.
8. WHEREVER PRACTICAL & FEASIBLE, USE FRAME & GRATE W/HOOD SHOWN ON THIS SHEET IN SUMP CONDITIONS.

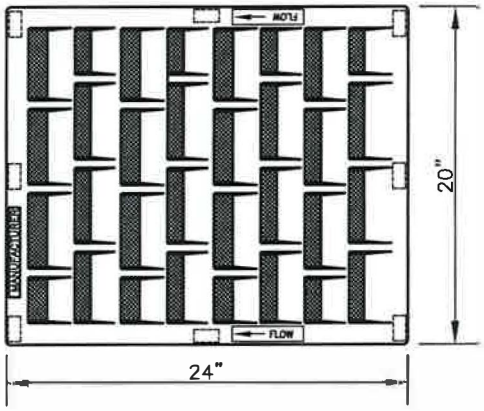

DIRECTIONAL VANED GRATE
SEE CITY STANDARD PLAN B–2A

APPROVED BY:

DIRECTOR, ENGINEERING SERVICES PERRY M. TAYLOR, P.E.

PRINCIPAL ENGINEER, CONST. KENNETH M. BROWN, P.E.

ADOPTED: 05/2007
REVISED: 04/2013
SUPERSEDES: 05/2007
CHECKED BY: JAG
SCALE: NTS
DWG/REV. BY: PCF/RDC

FRAME AND GRATE
FOR CATCH BASIN TYPE 1

ENGINEERING SERVICES
CITY OF SPOKANE, WASHINGTON

STANDARD PLAN No. B–3A

Back to Section B - TOC

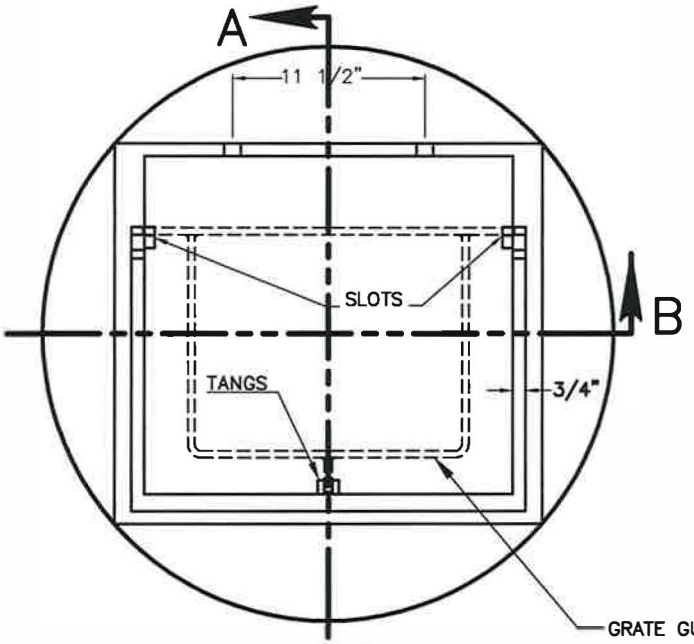

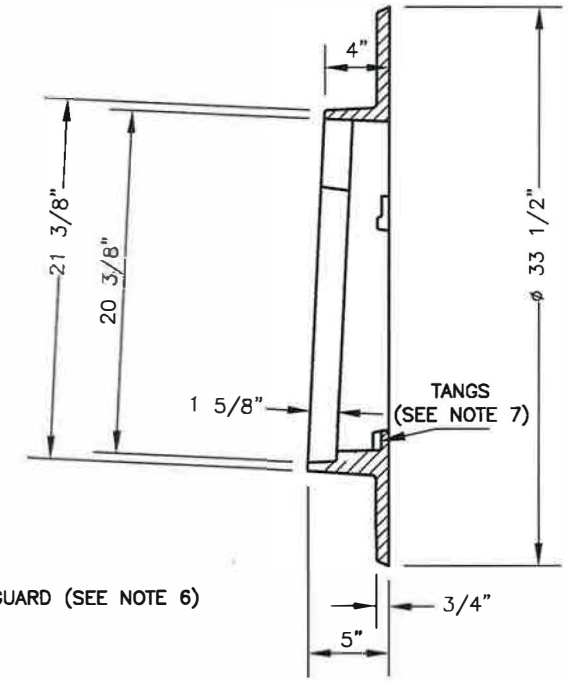

SECTION A–A

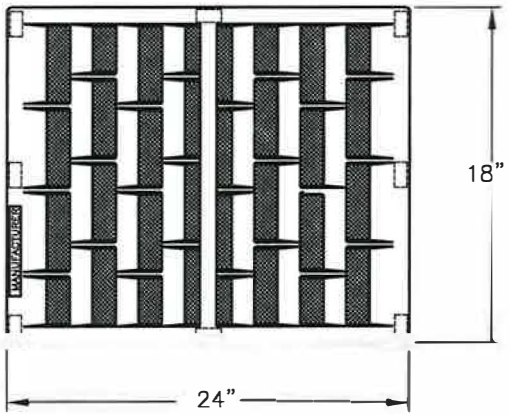

BI–DIRECTIONAL VANED GRATE

SEE CITY STANDARD PLAN B–2B

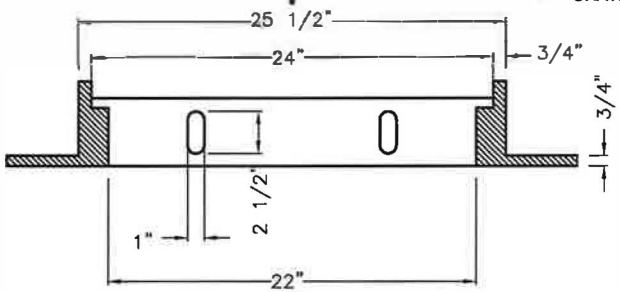

SECTION B–B

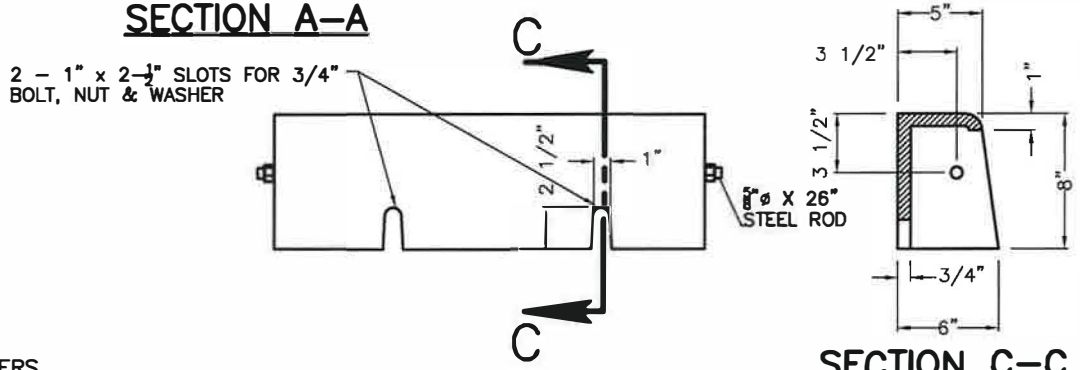

SECTION C–C

CATCH BASIN HOOD

NOTES:

1. SEE SECTIONS 9–05.15(1) AND 9–05.15(2)
2. FRAME: GRAY IRON CASTING, SEE SECTION 9–06.9.
3. GRATE: DUCTILE IRON CASTING, SEE SECTION 9–06.14.
4. FOUNDRY NAME, DATE, HEAT NUMBER AND MATERIAL IN RAISED LETTERS ON INTERIOR OF EACH CASTING.
5. TOLERANCES ± 0.0625".
6. GRATE GUARD REQ'D. SEE CITY STD PLAN B–2C.
7. CONTINUOUS LIP ON BOTTOM OF TANGS TO REST GRATE GUARD TAB ON.
8. WHEREVER PRACTICAL & FEASIBLE, USE FRAME & GRATE W/HOOD SHOWN ON THIS SHEET IN SUMP CONDITIONS.

APPROVED BY

DIRECTOR, ENGINEERING SERVICES — PERRY M. TAYLOR, P.E.

PRINCIPAL ENGINEER, CONST. — KENNETH M. BROWN, P.E.

ADOPTED:	05/2007
REVISED:	04/2013
SUPERSEDES:	05/2007
CHECKED BY:	JAG
SCALE:	NTS
DWG/REV. BY:	PCF/RDC

FRAME AND GRATE
FOR CATCH BASIN TYPE 3

ENGINEERING SERVICES
CITY OF SPOKANE, WASHINGTON

STANDARD PLAN No. B–3B

Back to Section B - TOC

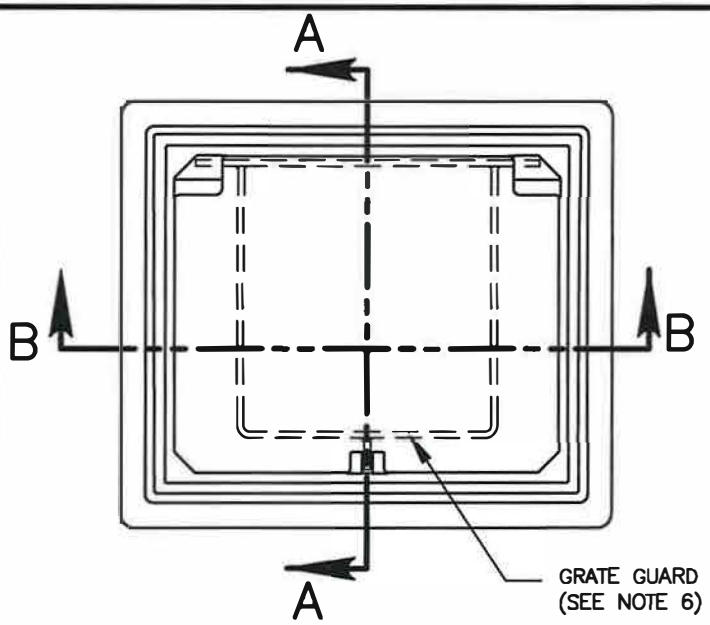

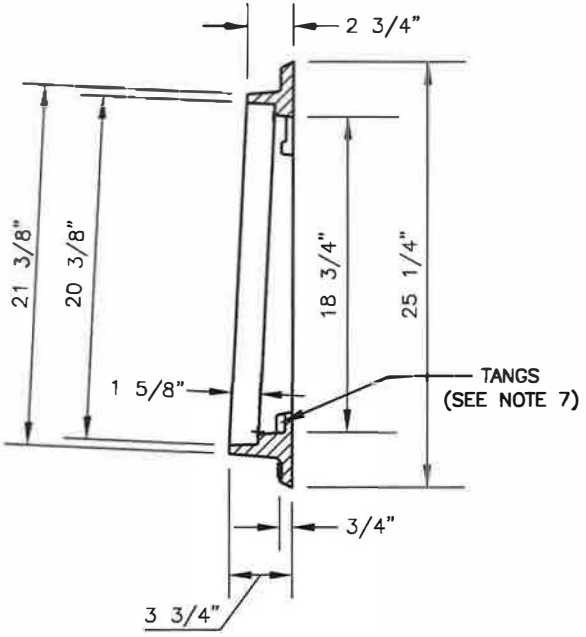

SECTION A–A

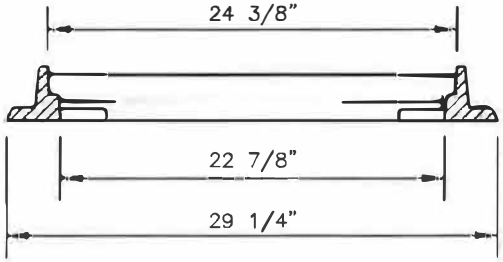

SECTION B–B

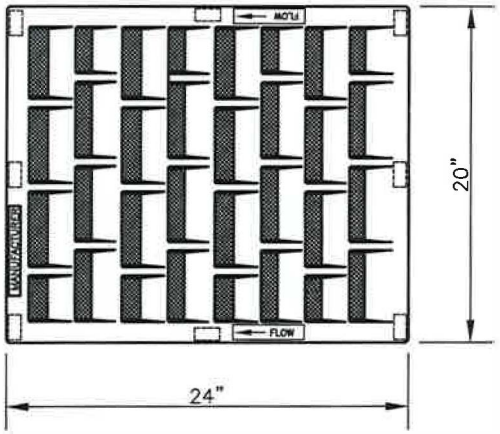

DIRECTIONAL VANED GRATE

SEE CITY STANDARD PLAN B–2A

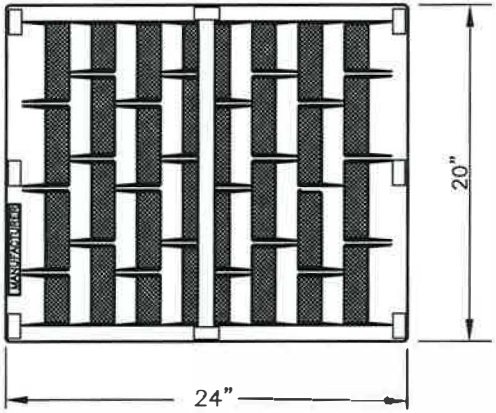

BI–DIRECTIONAL VANED GRATE

SEE CITY STANDARD PLAN B–2B

NOTES:

1. SEE SECTIONS 9–05.15(1) AND 9–05.15(2)
2. FRAME: GRAY IRON CASTING, SEE SECTION 9–06.9.
3. GRATE: DUCTILE IRON CASTING, SEE SECTION 9–06.14.
4. FOUNDRY NAME, DATE, HEAT NUMBER AND MATERIAL IN RAISED LETTERS ON INTERIOR OF EACH CASTING.
5. TOLERANCES ± 0.0625".
6. GRATE GUARD REQ'D. SEE CITY STD PLAN B–2C.
7. CONTIUOUS LIP ON BOTTOM OF TANGS TO REST GRATE GUARD TAB ON.
8. USE DIRECTIONAL VANED GRATE (B–2A) IN CONTINUOUS GRADE CONDITIONS & BI–DIRECTIONAL VANED GRATE (B–2B) IN SUMP CONDITIONS

APPROVED BY

DIRECTOR, ENGINEERING SERVICES PERRY M. TAYLOR, P.E.

PRINCIPAL ENGINEER, CONST. KENNETH M. BROWN, P.E.

ADOPTED: 02/1986
REVISED: 04/2013
SUPERSEDES: 05/2007
CHECKED BY: JAG
SCALE: NTS
DWG/REV. BY: DGB/RLB

FRAME AND GRATE
FOR INLET, TYPE 3

ENGINEERING SERVICES
CITY OF SPOKANE, WASHINGTON

STANDARD PLAN No. B–3C

Back to Section B - TOC

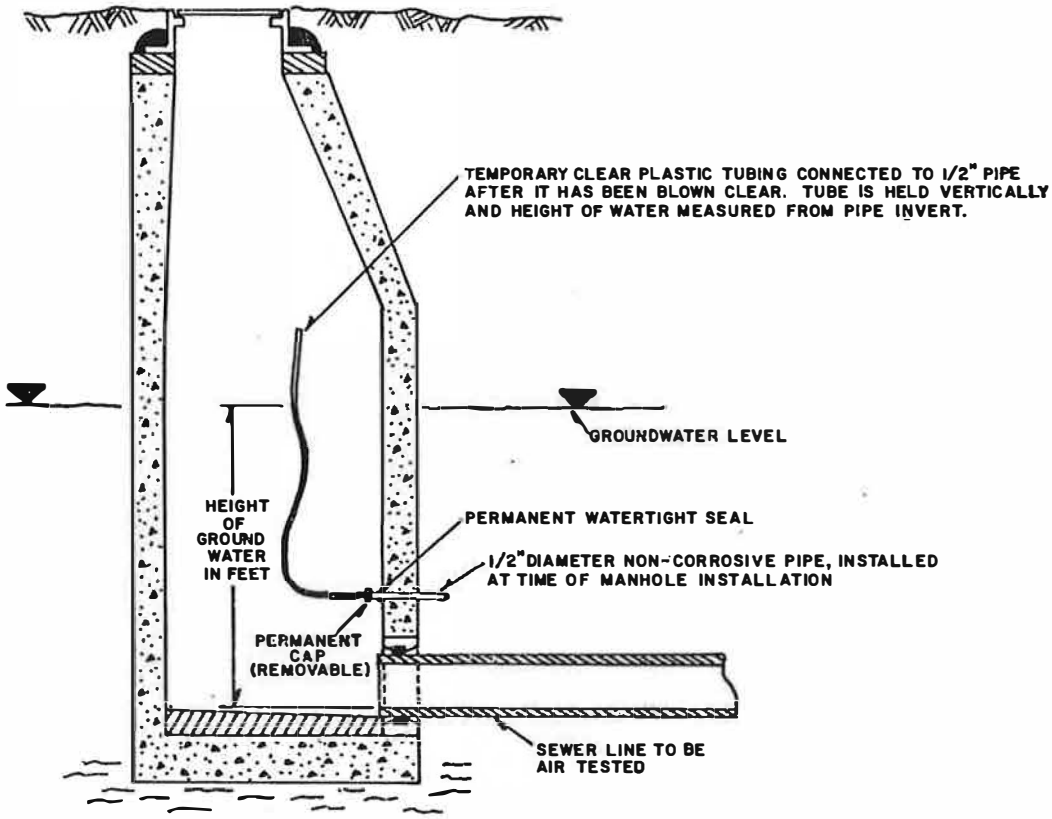

1. PIPE NIPPLE INSTALLATION

During manhole installation, a one-half inch diameter threaded pipe nipple shall be installed through the manhole wall directly on top of one of the sewer pipes entering the manhole. The threaded end of the nipple shall extend no more than two inches on the inside of the manhole. The total length of the nipple shall exceed the manhole wall thickness by no less than four inches. The pipe nipple shall be non-corrosive and resistant to chemicals common in domestic sewage. Special attention shall be given to providing a permanent, water-tight seal around the pipe nipple at the manhole wall. The pipe nipple shall be sealed with a threaded one-half inch cap. Every manhole need not have a pipe nipple. A few key manhole locations should be sufficient to establish a groundwater profile for the test area. The Engineer shall assist the Contractor in selecting appropriate manholes for pipe nipple installation.

2. GROUND WATER ELEVATION

Immediately before air testing, the groundwater level shall be determined by removing the threaded cap(s) from the nipple(s) nearest the section to be tested, blowing air through the pipe nipple(s) to remove any obstructions, and then connecting clear plastic tube(s) to the pipe nipple(s). Each plastic tube shall be held vertically to allow groundwater to rise in it. After the water level in the tube has stopped rising, a measurement of the height in feet of water over the invert of the sewer pipe shall be taken. If the section to be tested is not immediately adjacent to an installed pipe nipple, the groundwater height shall be estimated based upon nearby height readings and the pipe's invert elevation.

3. AIR PRESSURE ADJUSTMENT

The air pressure correction, which must be added to the 3.5 psig normal test starting pressure, shall be calculated by dividing the average vertical height, in feet of groundwater above the invert of the sewer pipe to be tested, by 2.31. The result gives the air pressure correction in pounds per square inch to be added. (For example, if the average vertical height of groundwater above the pipe invert is 2.8 feet, the additional air pressure required would equal 2.8 divided by 2.31 or 1.2 psig. This would require a minimum starting pressure of 3.5 plus 1.2 or 4.7 psig.) The allowable pressure drop and the timing are not affected and shall remain the same.

4. MAXIMUM TEST PRESSURE

In no case should the starting test pressure exceed 6.0 psig. If the average vertical height of groundwater above the pipe invert is more than 5.8 feet, the section so submerged may be tested using 6.0 psig as the starting test pressure. The 6.0 psig limit is intended to further ensure workman safety and falls within the range of the pressure monitoring gauges normally used.

5. RESEALING OF PIPE NIPPLES

After the groundwater height has been determined, each pipe nipple shall be recapped and sealed to prevent any future infiltration.

APPROVED	SCALE NONE	PROPER METHOD FOR DETERMINING GROUND WATER HEIGHT	
CITY ENGINEER Brad A. Blair	ADOPTED 2-86		
CHIEF DESIGN ENGINEER Tony Meil	REVISED	DEPT. OF PUBLIC WORKS	STANDARD PLAN
	SUPERSEDES	ENGR. DIVISION SPOKANE, WA.	Nº B-15a

Back to Section B - TOC

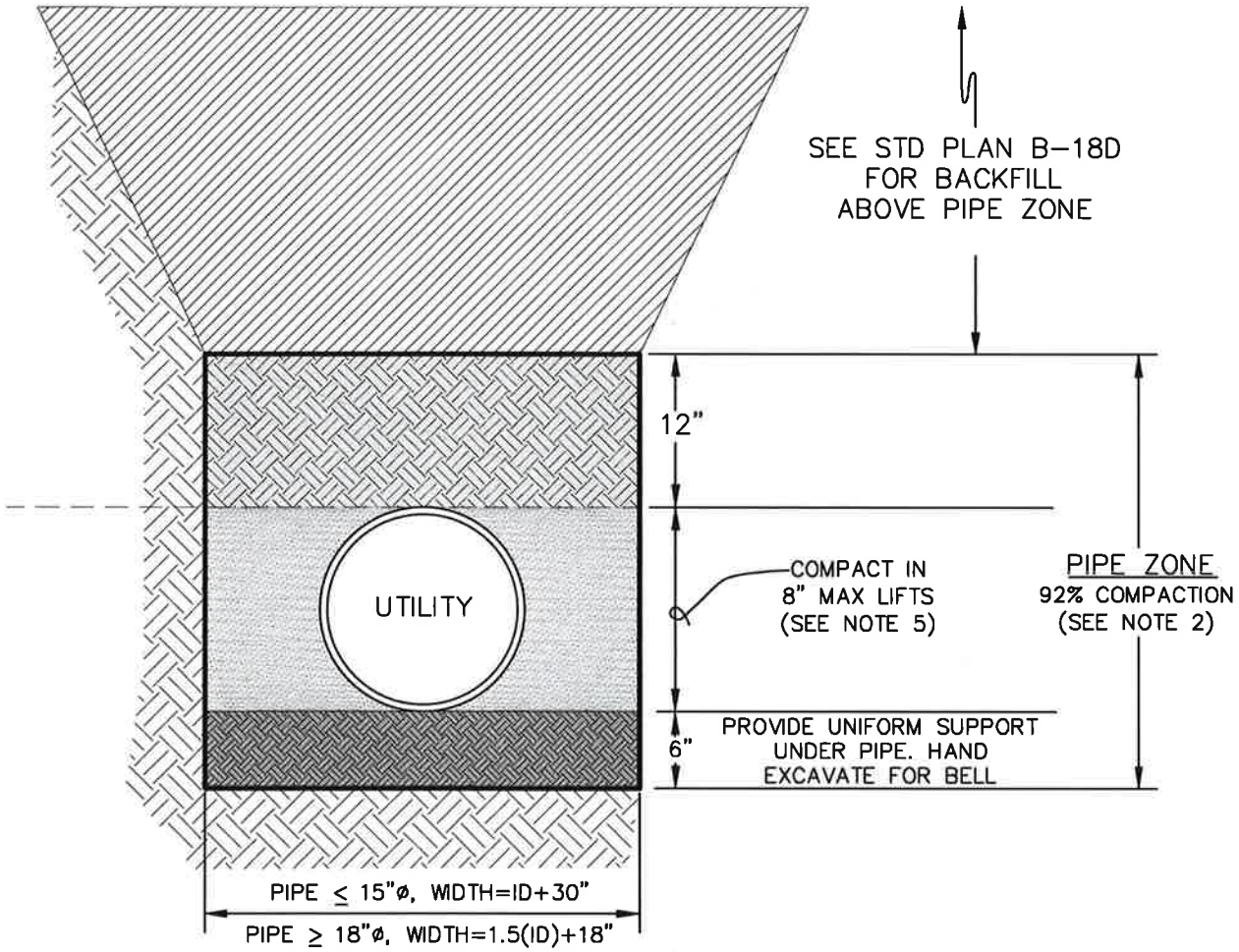

NOTES:

1. ALL MATERIAL IN PIPE ZONE INCLUDING 6" BENEATH THE PIPE SHALL CONFORM TO SEC 9-03.12(3) FOR SAND OR NATIVE MATERIAL EXCEPT AS FOLLOWS:

   a) IF ROCK OR GROUND WATER IS PRESENT, PIPE ZONE MATERIAL SHALL BE CSTC PER SEC 9-03.9(3).

   b) FOR RIGID SEWERS, PIPE ZONE MATERIAL ABOVE THE SPRING LINE MAY EITHER BE PER SEC 9-03.12(3), SAND OR NATIVE, OR 9-03.14(1), GRAVEL BORROW, EXCEPT THAT MAX MATERIAL SIZE SHALL BE 1-IN PER 1-FT OF PIPE DIAMETER UP TO A 2" MAX.

2. COMPACTION METHODS IN PIPE ZONE SHALL BE PER SECTION 7-09.3(9).

3. REFER TO 7-08.3(1)C FOR ADDITIONAL REQUIREMENTS.

4. WHERE TRENCH EXCAVATION IS PAID SEPARATELY, PAYMENT LIMITS SHALL BE PER SEC 2-09.4.

5. BEDDING TO BE INSTALLED PER SECTION 7-09.3(9). A LIFT LAYER UP TO A MAXIMUM OF 18 INCHES MAY BE APPROVED BY THE ENGINEER.

APPROVED BY			
ENGINEERING OPERATIONS MANAGER KYLE TWOHIG CITY ENGINEER DANIEL ALBERT BULLER, P.E.	ADOPTED: 02/1986 REVISED: 02/2017 SUPERSEDES: 09/2010 CHECKED BY: JAG SCALE: NTS DWG/REV. BY: SRM/MLD	**UTILITY TRENCH BACKFILL** **PIPE ZONE**	STANDARD PLAN No. **B-18C**
		ENGINEERING SERVICES CITY OF SPOKANE, WASHINGTON	

Back to Section B - TOC

BACKFILL FOR UTILITY TRENCHES

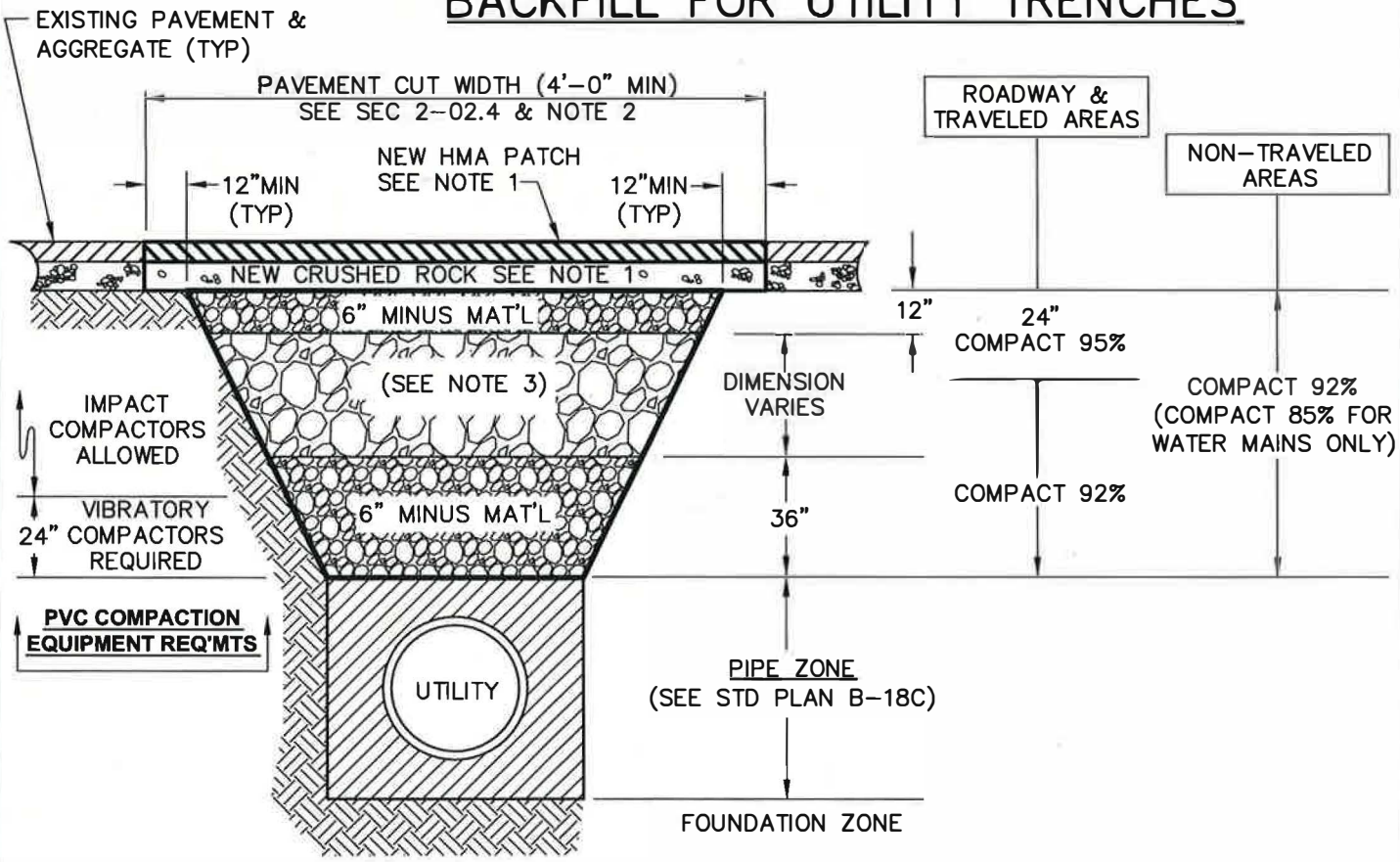

NOTES:

1. REPLACE HOT MIX ASPHALT (HMA) PAVEMENT & CRUSHED ROCK PER STD PLANS W–102, W–108, & W–109.
2. SEE CITY OF SPOKANE (COS) PAVEMENT CUT POLICY IN THE COS DESIGN STDS, APPENDIX 'F' FOR ADD'NL REQ'MTS.
3. WATER LINES REQUIRE 6" MINUS MAT'L FOR THE ENTIRE BACKFILL. 12" MINUS MAT'L MAY BE USED FOR OTHER UTILITIES.
4. COMPACTION ABOVE THE PIPE ZONE SHALL BE MEASURED PER SEC 2–03.3(14)D. FOR ROADWAY & TRAVELED AREAS COMPACT TOP 2–FT IN 4" MAX LIFTS. COMPACT BELOW TOP 2–FT TO TOP OF PIPE ZONE IN 8" MAX LIFTS. FOR NON–TRAVELED AREAS COMPACT IN 8" MAX. LIFTS. ENGINEER MAY WAIVER THE 92% COMPACTION TO A LESSER VALUE FOR GRASS SWALES OR OTHER PLANTING AREAS.
5. FOR DEVIATION FROM LIFT THICKNESS, SEE SEC 7–08.3(3) FOR SEWER/STORM & SEC 7–09.3(11) FOR WATER UTILITIES.
6. TRENCH EXCAVATION MATERIALS SHALL BE USED FOR BACKFILL IF MATERIALS MEET GRADUATION REQ'MTS ABOVE. IMPORTED BACKFILL SHALL MEET THE REQ'MTS OF SEC 9–03.14(1), GRAVEL BORROW.
7. CONTROLLED DENSITY FILL (CDF) PER SEC 2–09.3(1)E, MAY BE USED IN LIEU OF NATIVE BACKFILL WHERE IT IS NOT PRACTICAL TO COMPACT BACKFILL TO THE REQ'D DENSITY. SUCH USE SHALL BE PRE–APPROVED BY THE ENGINEER. SEE STD PLAN B–18E FOR CDF BACKFILL REQ'MTS.

APPROVED BY

DIRECTOR, ENGINEERING SERVICES — P. MIKE TAYLOR, P.E.

PRINCIPAL ENGINEER, DESIGN — GARY S. NELSON, P.E.

ADOPTED: 2/1990
REVISED: 4/2012
SUPERSEDES: 9/2010
CHECKED BY: JAG
SCALE: NTS
DWG/REV. BY: SRM/MBM

UTILITY TRENCH BACKFILL
ABOVE PIPE ZONE

ENGINEERING SERVICES
CITY OF SPOKANE, WASHINGTON

STANDARD PLAN No. B–18D

Back to Section B - TOC

CDF BACKFILL FOR UTILITY TRENCHES

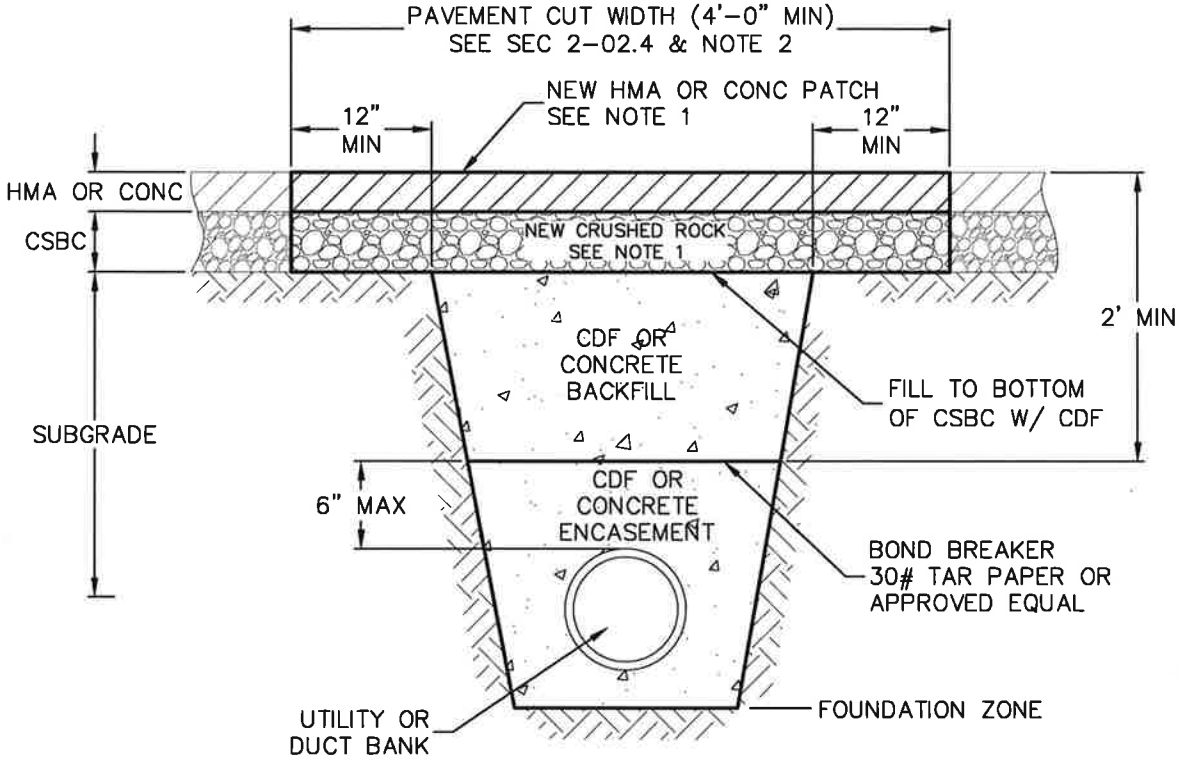

NOTES:

1. REPLACE HOT MIX ASPHALT (HMA) OR CONCRETE PAVEMENT PER CITY STANDARD PLANS W-102, W-108, & W-109.
2. SEE CITY OF SPOKANE (COS) PAVEMENT CUT POLICY IN THE COS DESIGN STANDARDS, APPENDIX 'F' FOR ADDITIONAL REQUIREMENTS.
3. BEDDING MATERIAL PER SEC 7-08.3(1)C MAY BE USED AS AN ALTERNATIVE TO CDF & CAPPED W/ CDF TO SERVE AS A LOCATION MARKER FOR THE UTILITY.
4. 30# TAR PAPER SHALL BE PLACED THE FULL LENGTH AND WIDTH OF A UTILITY TRENCH WHEN THE UTILITY IS ENCASED IN CDF OR CONCRETE AND THE REMAINDER OF THE TRENCH IS BACKFILLED WITH CDF OR CONCRETE.

APPROVED BY			
ENGINEERING OPERATIONS MANAGER KYLE TWOHIG CITY ENGINEER DANIEL ALBERT BULLER, P.E.	ADOPTED: 04/2004 REVISED: 01/2017 SUPERSEDES: 04/2012 CHECKED BY: JAG SCALE: NTS DWG/REV. BY: TSS/MLD	**UTILITY TRENCH BACKFILL** **REQUIREMENTS USING CDF OR CONCRETE**	STANDARD PLAN No. **B-18E**
		SPOKANE ENGINEERING SERVICES CITY OF SPOKANE, WASHINGTON	

Back to Section B - TOC

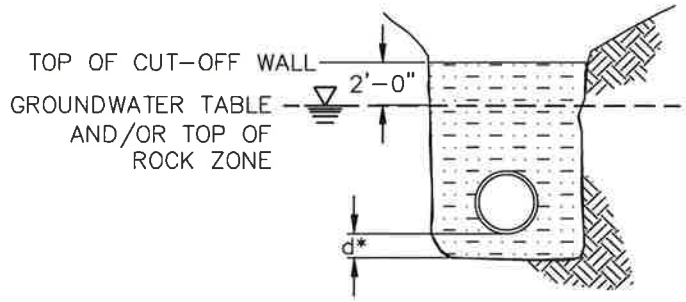

SECTION A-A

*d = 6" ON ROCK FOUNDATION
4" ON OTHER MATERIALS

NOTES:

1. CUT-OFF WALLS PLACED WITHIN THE CITY R-O-W SHALL BE CONSTRUCTED USING MACHINE EXCAVATABLE CDF AS DESCRIBED IN SECTION 2-09.3(1)E. PIPE SHALL BE WRAPPED WITH 6 MIL PLASTIC.

2. CUT-OFF WALLS NOT PLACED WITHIN THE CITY R-O-W MAY BE CONSTRUCTED USING CLAY OR A BENTONITE PEA GRAVEL SLURRY.

3. CUT-OFF WALL SHALL BE WRAPPED WITH WOVEN GEOTEXTILE FABRIC FOR SEPARATION, SEE SEC 9-33. OVERLAP ALL FABRIC JOINTS 1'-6" MIN.

4. CUT-OFF WALL SHALL BE FULL WIDTH OF TRENCH.

5. L = 3' FOR CDF CUT-OFF WALL
L = 6' FOR CLAY OR BENTONITE PEA GRAVEL SLURRY CUT-OFF WALL

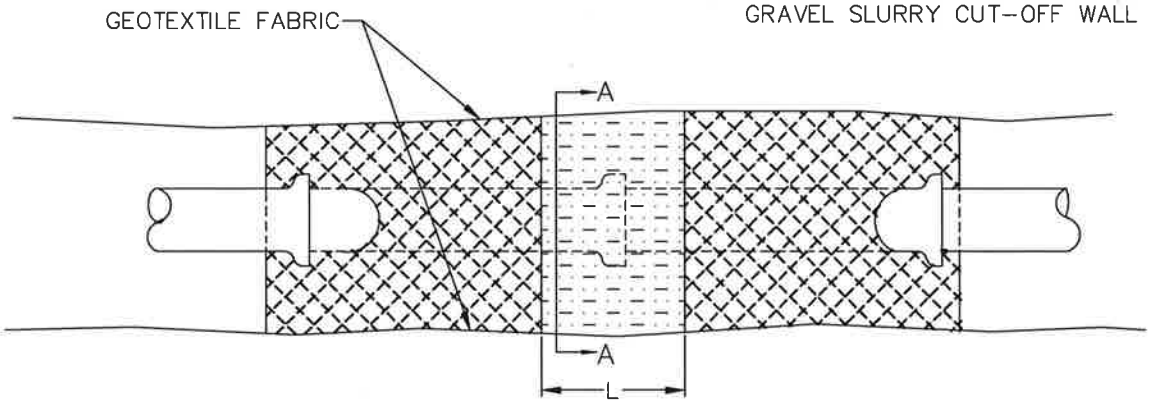

PLAN

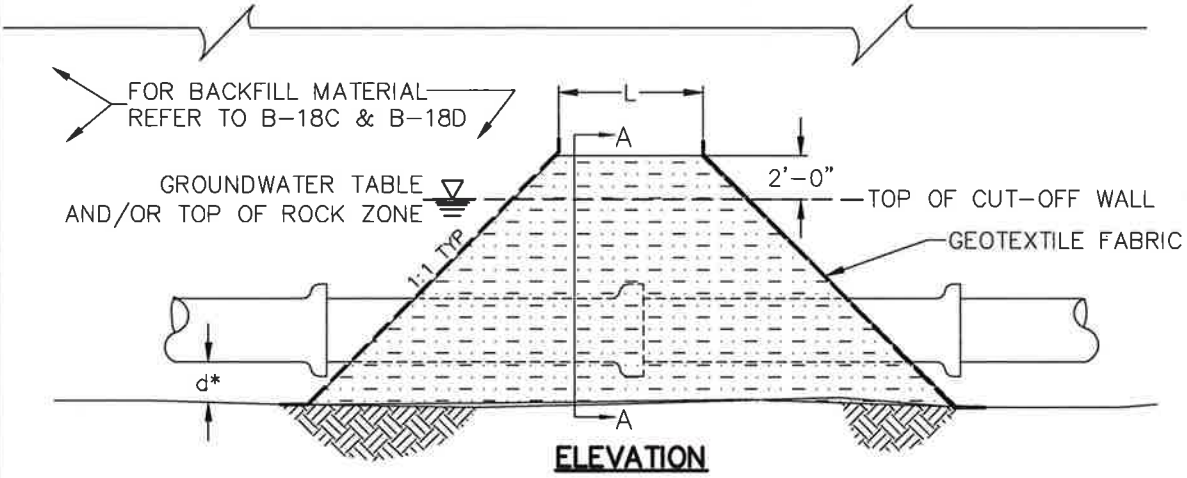

ELEVATION

APPROVED BY ENGINEERING OPERATIONS MANAGER KYLE TWOHIG CITY ENGINEER DANIEL ALBERT BULLER, P.E.	ADOPTED: 12/1993 REVISED: 01/2017 SUPERSEDES: 12/1993 CHECKED BY: JAG SCALE: NTS DWG/REV. BY: MLD	CUT-OFF WALL ENGINEERING SERVICES CITY OF SPOKANE, WASHINGTON	STANDARD PLAN No. B-19

Back to Section B - TOC

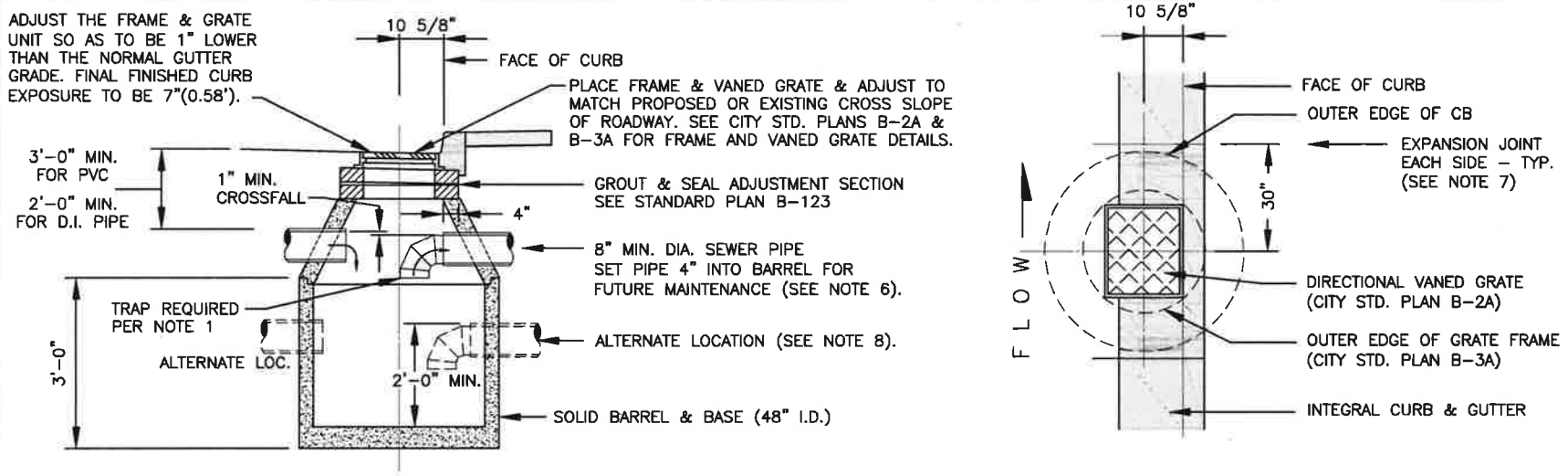

FRAME & VANED GRATE: NORMAL INSTALLATION

FOR USE IN CONTINUOUS GRADE SITUATIONS

NOTES:

1. SEE STD. PLAN B-120 FOR OUTLET TRAP. TRAP REQUIRED WHEN CATCH BASIN CONNECTED TO CITY STORM SYSTEM, DRYWELL, ABSORPTION TRENCH, OR OTHER U/G INJECTION STRUCTURE/FACILITY. TRAP TO REMAIN REMOVABLE FOR MAINTENANCE THEREFORE NO MECHANICAL CONNECTION BETWEEN TRAP & OUTLET ALLOWED. VERTICAL PROJECTION OF TRAP NOT TO EXTEND BEYOND C/L OF ACCESS OPENING.
2. IF AN INLET PIPE IS PRESENT, THE INVERT SHALL BE HIGHER IN ELEVATION THAN THE OUTLET PIPE INVERT. A C.B. WITH AN INLET PIPE IS UTILIZED ONLY WHEN CONNECTING ADDITIONAL C.B.'s AT AN INTERSECTION OR WHEN ADDING GRATE INLET TYPE 3. A C.B. WITH INLET PIPE(S) IS NOT ALLOWED AS A SUBSTITUTE FOR A M.H.
3. SEE SEC. 9-12 FOR PRECAST CONCRETE CATCH BASINS.
4. SEE STD. PLAN B-122 FOR BASE SLAB & FOUNDATION DETAILS.
5. CONE & BARREL JOINTS MAY BE EITHER TONGUE & GROOVE OR REVERSE TONGUE & GROOVE.
6. ADJUSTMENT SECTION, CONE, BARREL, & PIPE OPENINGS TO BE SEALED PER SECTION 7-05.
7. CONCRETE CURB & GUTTER SHALL BE BLOCKED OUT FOR A 5-FT LENGTH CENTERED @ THE C.B. TO ALLOW FOR LOCATING CB ADJACENT TO CURB.
8. USE ALTERNATE LOCATION FOR INLET/OUTLET PIPES ONLY IF INLET PIPE REQUIRES ADDITIONAL DEPTH FOR SLOPING.
9. SEE STANDARD PLAN B-123 FOR ADJUSTMENT SECTION REQUIREMENTS.
10. A DESIGN VARIANCE IS REQUIRED BEFORE A CATCH BASIN - TYPE 0 IS INSTALLED.

APPROVED BY

ENGINEERING OPERATIONS MANAGER — KYLE TWOHIG

CITY ENGINEER — DANIEL ALBERT BULLER, P.E.

ADOPTED: 02/1986
REVISED: 01/2017
SUPERSEDES: 09/2010
CHECKED BY: GSN
SCALE: NTS
DWG./REV BY: SRM/MLD

CATCH BASIN-TYPE 0

ENGINEERING SERVICES
CITY OF SPOKANE, WASHINGTON

STANDARD PLAN No. **B-101B**

Back to Section B - TOC

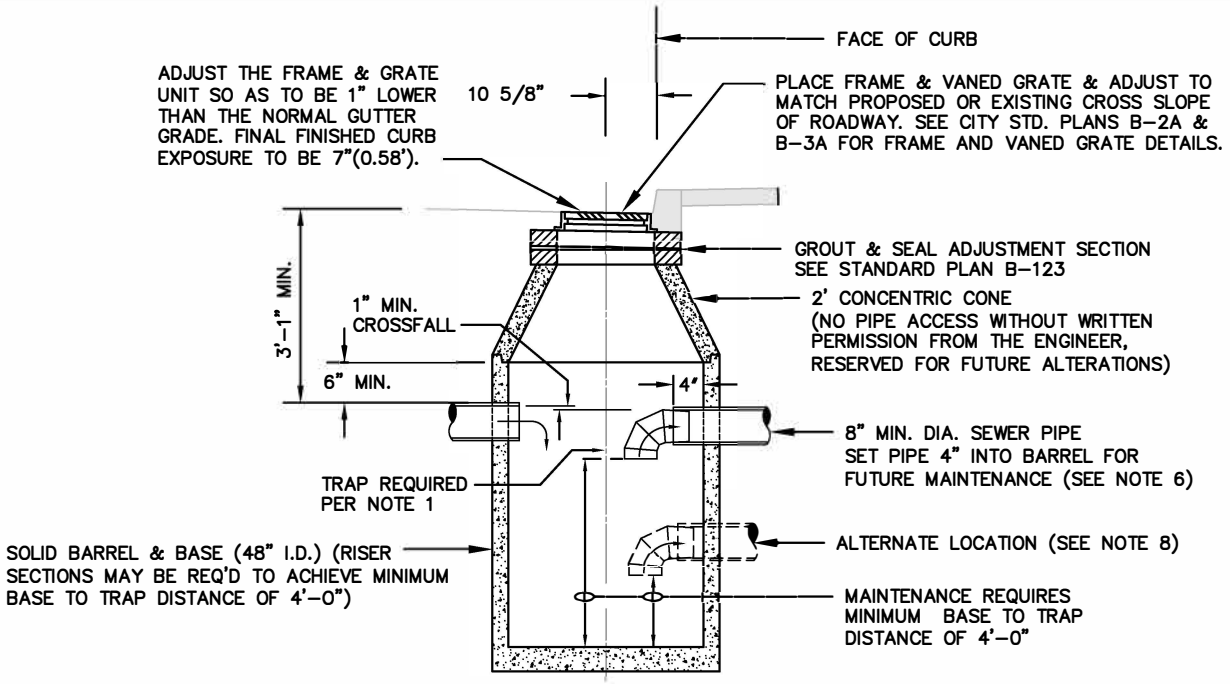

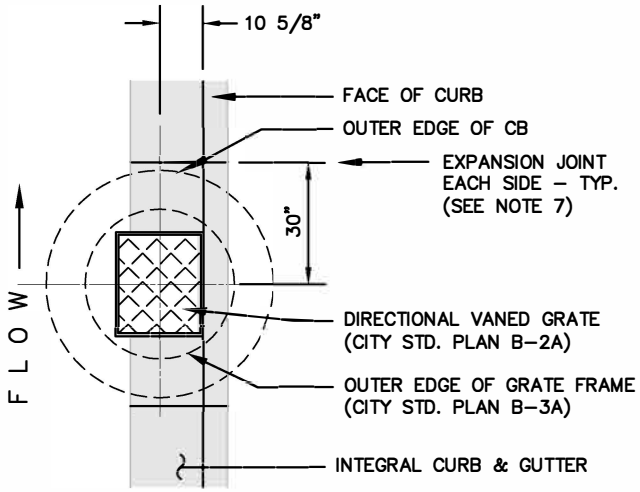

FRAME & VANED GRATE: NORMAL INSTALLATION

FOR USE IN CONTINUOUS GRADE SITUATIONS

NOTES:

1. SEE STD. PLAN B-120 FOR OUTLET TRAP. A TRAP IS REQUIRED ON ANY OUTLET PIPE. TRAP TO REMAIN REMOVABLE FOR MAINTENANCE THEREFORE NO MECHANICAL CONNECTION BETWEEN TRAP & OUTLET ALLOWED. VERTICAL PROJECTION OF TRAP NOT TO EXTEND BEYOND C/L OF ACCESS OPENING.
2. IF AN INLET PIPE IS PRESENT, THE INVERT SHALL BE HIGHER IN ELEVATION THAN THE OUTLET PIPE INVERT. A C.B. WITH AN INLET PIPE IS UTILIZED ONLY WHEN CONNECTING ADDITIONAL C.B.'s AT AN INTERSECTION OR WHEN ADDING GRATE INLET TYPE 3. A C.B. WITH INLET PIPE(S) IS NOT ALLOWED AS A SUBSTITUTE FOR A M.H.
3. SEE SEC. 9-12 FOR PRECAST CONCRETE CATCH BASINS.
4. SEE STD. PLAN B-122 FOR BASE SLAB & FOUNDATION DETAILS.
5. CONE & BARREL JOINTS MAY BE EITHER TONGUE & GROOVE OR REVERSE TONGUE & GROOVE.
6. ADJUSTMENT SECTION, CONE, BARREL, RISER SECTIONS (IF USED), & PIPE OPENINGS TO BE SEALED PER SECTION 7-05.
7. CONCRETE CURB & GUTTER SHALL BE BLOCKED OUT FOR A 5-FT LENGTH CENTERED @ THE C.B. TO ALLOW FOR LOCATING CB ADJACENT TO CURB.
8. USE ALTERNATE LOCATION FOR INLET/OUTLET PIPES ONLY IF INLET PIPE REQUIRES ADDITIONAL DEPTH FOR SLOPING. PROVIDE 4-FT DEPTH UNDER TRAP.
9. SEE STANDARD PLAN B-123 FOR ADJUSTMENT SECTION REQUIREMENTS.

APPROVED BY

ENGINEERING OPERATIONS MANAGER KYLE TWOHIG

CITY ENGINEER DANIEL ALBERT BULLER, P.E.

ADOPTED: 02/1986
REVISED: 04/2018
SUPERSEDES: 01/2017
CHECKED BY: JAG/GSN
SCALE: NTS
DWG/REV. BY: RJS/MLD

CATCH BASIN - TYPE 1

ENGINEERING SERVICES
CITY OF SPOKANE, WASHINGTON

STANDARD PLAN No. **B-101C**

Back to Section B - TOC

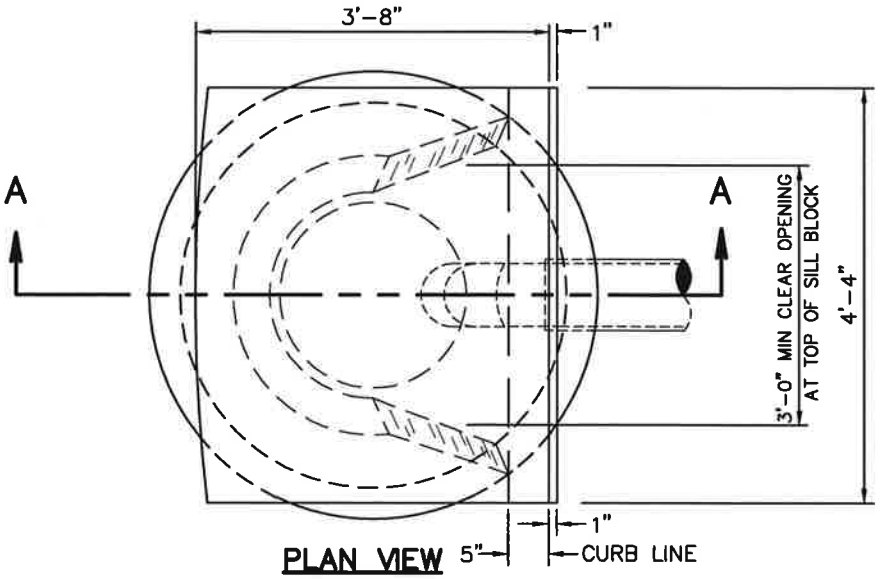

PLAN VIEW

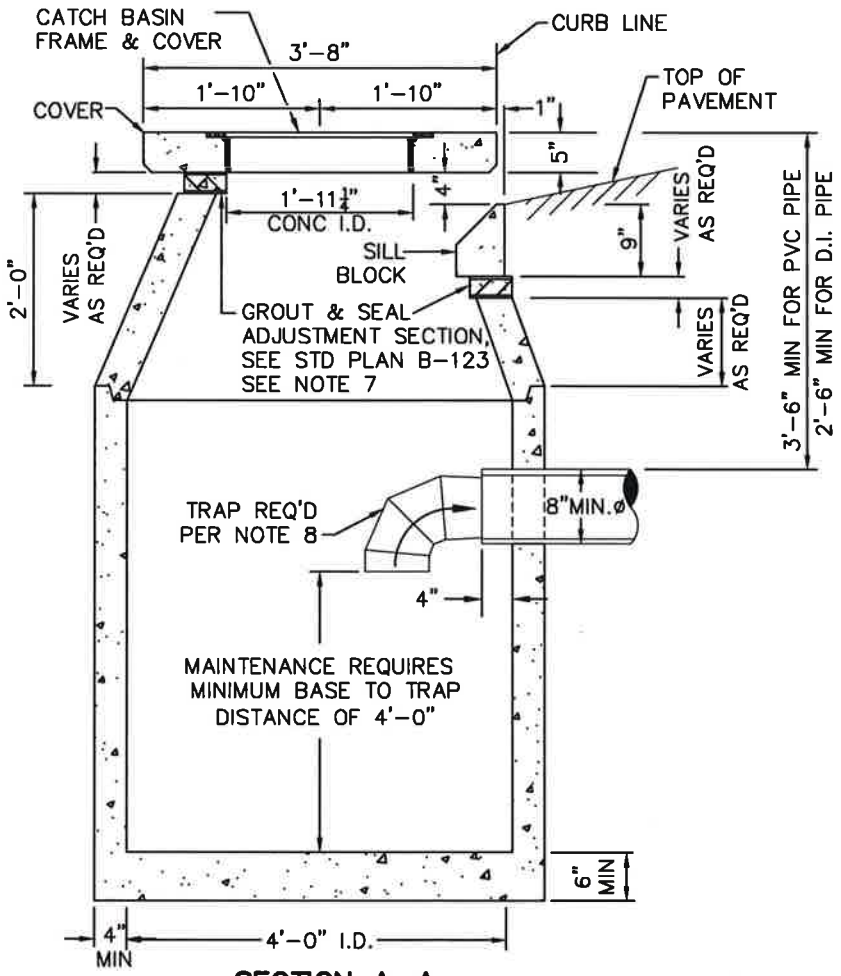

SECTION A-A

NOTES:

1. SEE SEC 9-12 FOR PRECAST CONCRETE CATCH BASINS.
2. SEE STD PLAN B-114 FOR CATCH BASIN, TYPE 2, FRAME & COVER.
3. SEE STD PLAN B-105 FOR COVER & SILL BLOCK.
4. SEE STD PLAN W-106 FOR GUTTER DETAILS.
5. SEE STD PLAN B-122 FOR BASE SLAB & FOUNDATION DETAILS.
6. CONE & BARREL JOINTS MAY BE EITHER TONGUE & GROOVE OR REVERSE TONGUE & GROOVE.
7. ADJUSTMENT SECTION, CONE, BARREL JOINTS, RISER SECTIONS (IF USED), & PIPE OPENINGS TO BE SEALED PER SEC 7-05.
8. SEE STD PLAN B-120 FOR OUTLET TRAP. A TRAP IS REQ'D ON ANY OUTLET PIPE. TRAP TO REMAIN REMOVABLE FOR MAINTENANCE THEREFORE, NO MECHANICAL CONNECTION BETWEEN TRAP & OUTLET PIPE IS ALLOWED. VERTICAL PROJECTION OF TRAP NOT TO EXTEND BEYOND C/L OF ACCESS OPENING.
9. SEE STANDARD PLAN B-123 FOR ADJUSTMENT SECTION REQUIREMENTS.
10. C.B.TYPE 2 SHALL BE UTILIZED WHERE GUTTER GRADES ARE ≤ ±0.75% (.0075).

APPROVED BY

ENGINEERING OPERATIONS MANAGER KYLE TWOHIG

CITY ENGINEER DANIEL ALBERT BULLER, P.E.

ADOPTED: 02/1986
REVISED: 01/2017
SUPERSEDES: 09/2010
CHECKED BY: JAG
SCALE: NTS
DWG/REV. BY: TSS/MLD

CATCH BASIN – TYPE 2

ENGINEERING SERVICES
CITY OF SPOKANE, WASHINGTON

STANDARD PLAN No. B-101D

Back to Section B - TOC

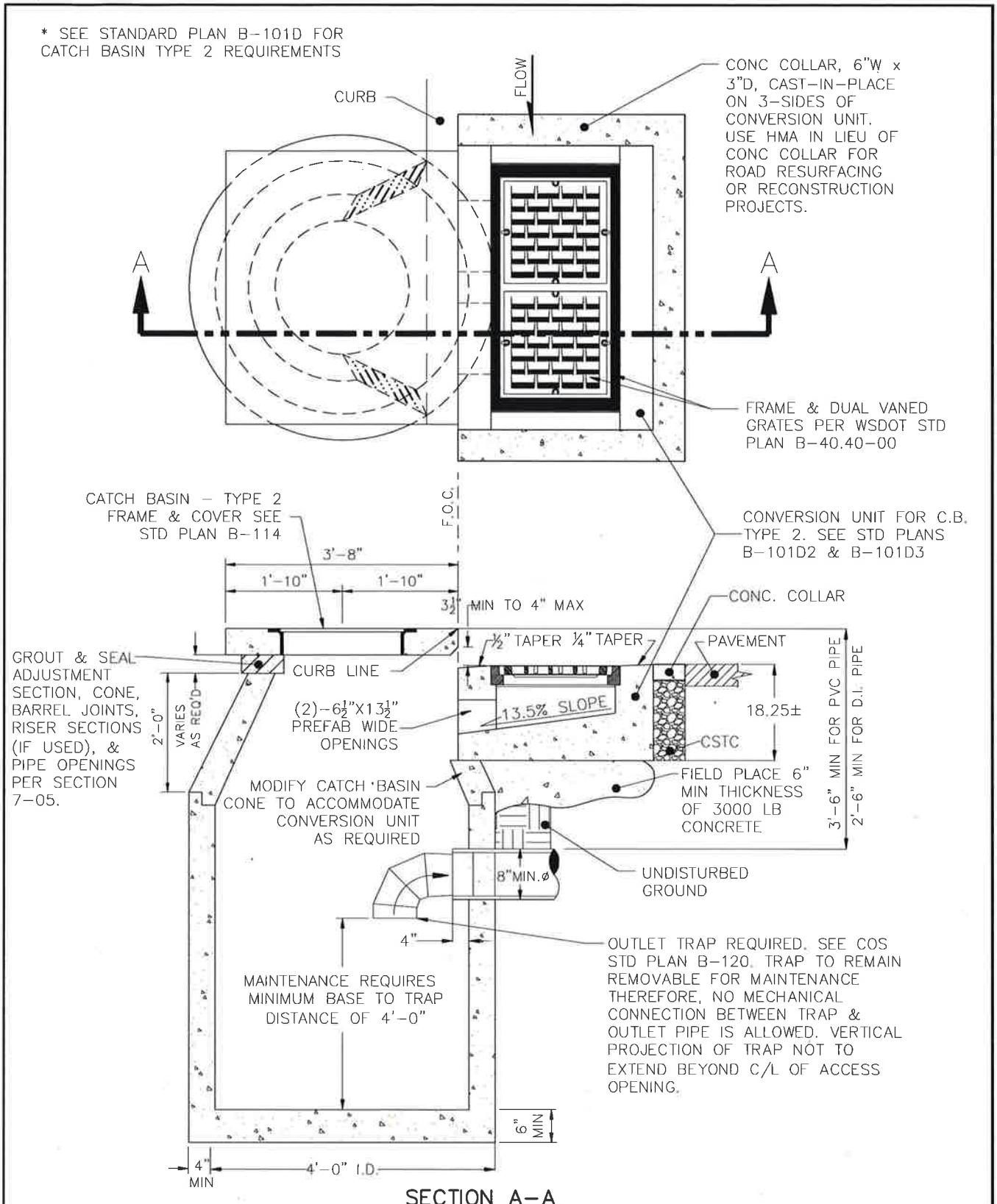

SECTION A-A

APPROVED BY

ENGINEERING OPERATIONS MANAGER — KYLE TWOHIG

CITY ENGINEER — DANIEL ALBERT BULLER, P.E.

ADOPTED:	01/2009
REVISED:	01/2017
SUPERSEDES:	04/2012
CHECKED BY:	JAG
SCALE:	NTS
DWG/REV. BY:	TCB/MLD

CATCH BASIN - TYPE 2

W/ CONVERSION UNIT FOR WSDOT VANED GRATES

SPOKANE

ENGINEERING SERVICES

CITY OF SPOKANE, WASHINGTON

STANDARD PLAN No. B-101D1

Back to Section B - TOC

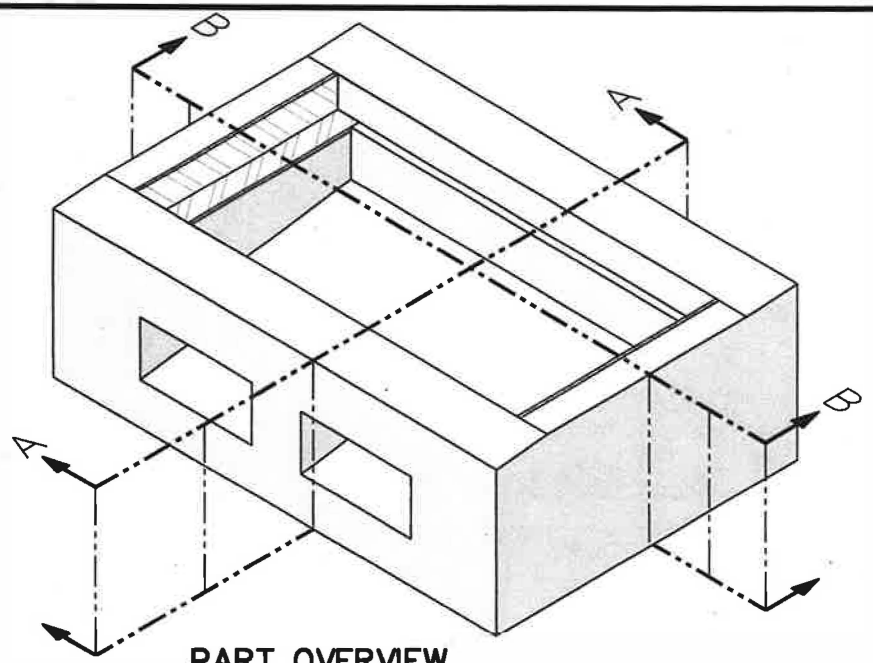

PART OVERVIEW

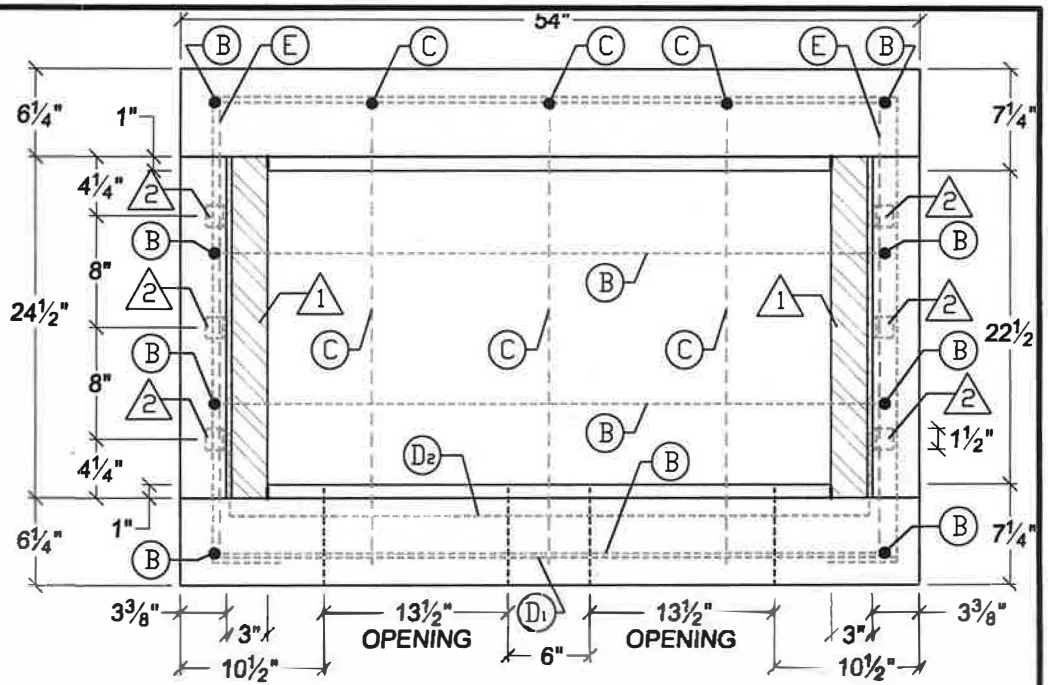

TOP VIEW

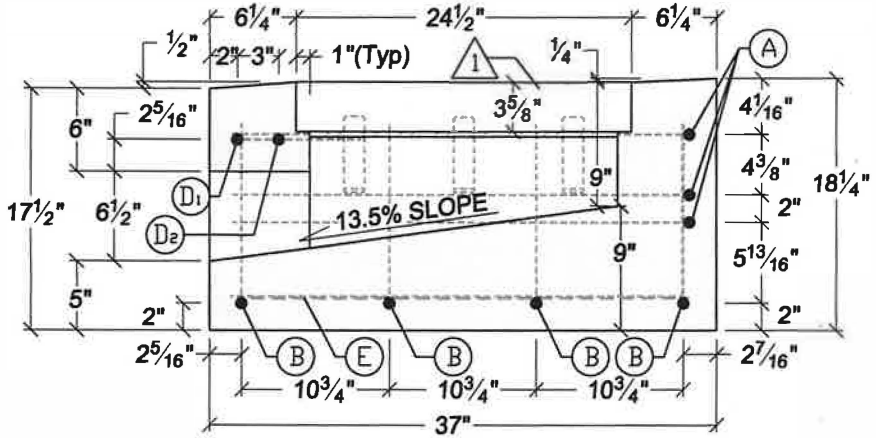

SECTION A–A

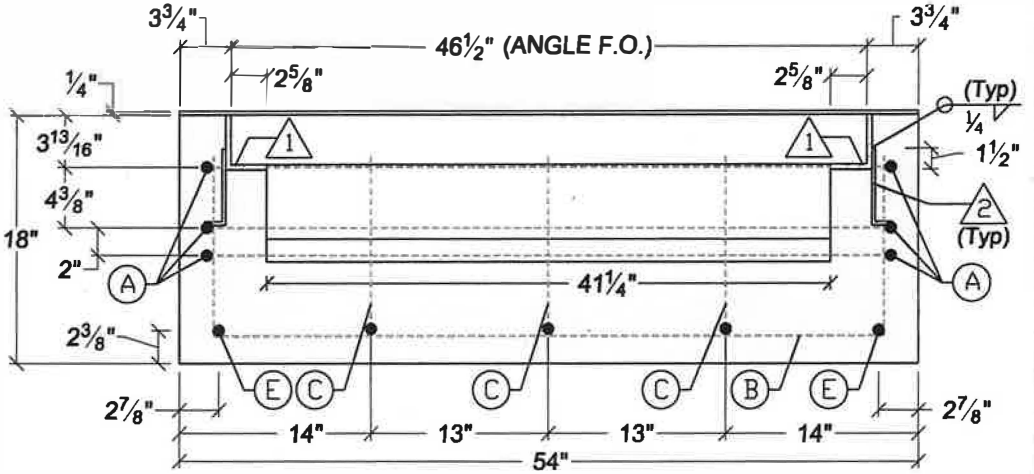

SECTION B–B

DETAIL NOTES:

1. 4"X3"X⅜" L=24½" STEEL ANGLE (ONE BOTH ENDS)
2. 5½"X1½"X¼" L=1½" STEEL ANGLES (3 BOTH ENDS)
3. (#) SEE PLAN B-101D3 FOR REBAR IDENTIFICATION & BENDING

APPROVED BY

DIRECTOR, ENGINEERING SERVICES — P. MIKE TAYLOR, P.E.

PRINCIPAL ENGINEER, DESIGN — GARY S. NELSON, P.E.

ADOPTED:	01/2009
REVISED:	09/2010
SUPERSEDES:	
CHECKED BY:	JAG
SCALE:	NTS
DWG/REV. BY:	MBM

CONVERSION UNIT

RETRO-FIT FOR CATCH BASIN TYPE 2

SPOKANE

ENGINEERING SERVICES
CITY OF SPOKANE, WASHINGTON

STANDARD PLAN No. B-101D2

Back to Section B - TOC

REBAR OVERVIEW

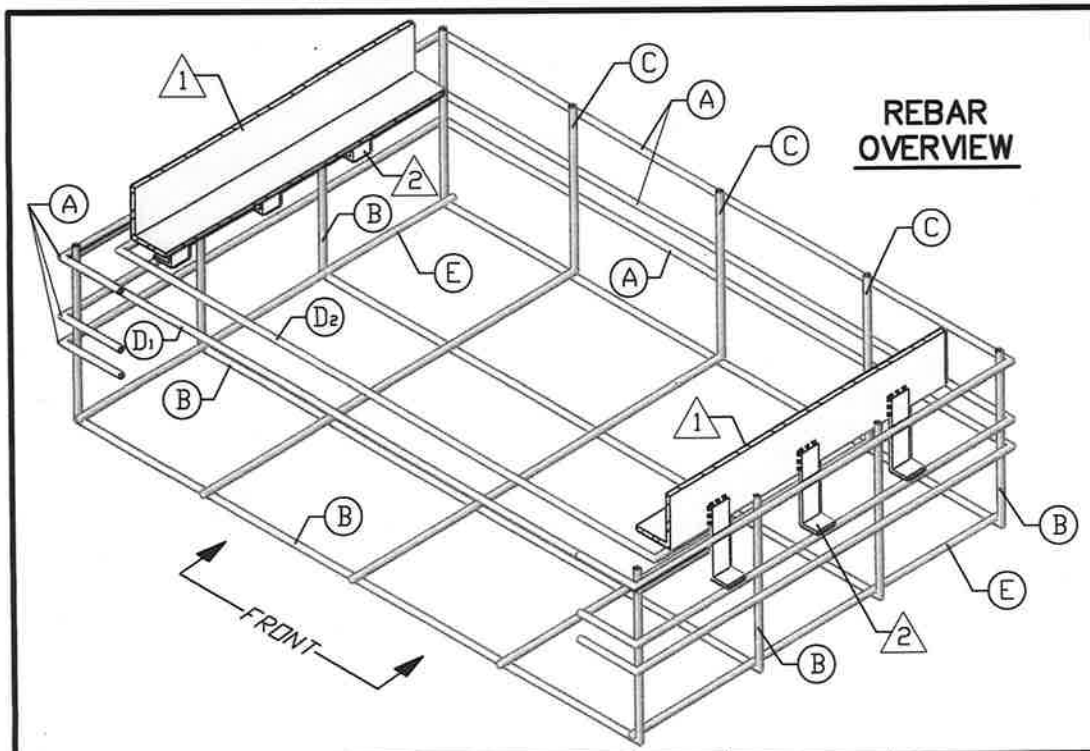

NOTES:

1. ANGLE (1) SHALL BE SET SO THAT THE PREFABRICATED FRAME SHALL HAVE FULL BEARING ON BOTH ENDS. THE FINISHED TOP OF CONCRETE SHALL BE EVEN WITH THE TOP OF STEEL ANGLE.
2. THE CONVERSION UNIT WITH FRAME & GRATE SHALL BE PLACED TO MATCH THE GUTTER SLOPE TO PROVIDE AN UNOBSTRUCTED FLOW LINE.
3. ALL EXPOSED CONCRETE EDGES SHALL BE FINISHED WITH A ½" RADIUS EDGER TOOL.
4. CONSTRUCT CONCRETE LEDGE FOR GRATE FRAME AROUND ALL FOUR SIDES. THE LONG CONCRETE LEDGES ARE RAISED ⅜" ABOVE THE SHORT LEDGES SINCE THEY RECEIVE NO ⅜" ANGLE.
5. ALL PICKUP HOLES SHALL BE GROUTED FULL AFTER THE BASIN HAS BEEN PLACED.
6. SEE CONTRACT FOR TYPE OF GRATE SPECIFIED. SEE WSDOT STANDARD PLAN B-40.40-00 FOR FRAME & GRATE DETAILS.
7. ALL REBAR SHALL HAVE A MINIMUM OF 2" COVERAGE ON ALL SIDES.

CLOSE UP DETAIL

FRONT TOP-RIGHT CORNER
(LOOKING UP)

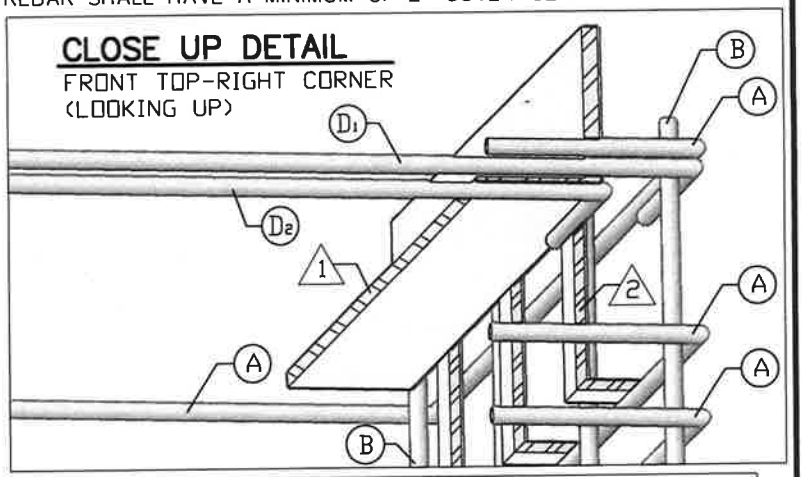

MARK	REBAR LOCATION	QTY.	SIZE	LENGTH	DESCRIPTION
(A)	SIDEWALL	3	3	10'-6 3/4"±	HORIZ.
(B)	BOTTOM SLAB AND SIDEWALL	4		6'-3"±	VERTICAL ON SIDEWALLS
(C)	BOTTOM SLAB AND SIDEWALL	3		3'-10"±	
(D1)	SIDE WALL OVER OPENING	1		5'-2"±	HORIZ.
(D2)		1		4'-10 3/4"±	
(E)	BOTTOM SLAB @ EACH END	2		2'-9"±	STRAIGHT

BENDING DIAGRAM

(ALL DIMENSIONS ARE OUT TO OUT±)

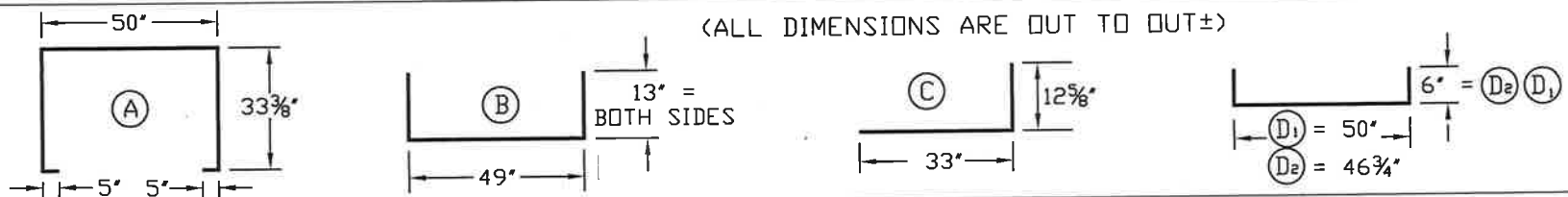

DETAIL NOTES:

(1) 4"x3"x⅜" L=24½" STEEL ANGLE (ONE BOTH ENDS)

(2) 5½"X1½"X¼" L=1½" STEEL ANGLES (3 BOTH ENDS)

APPROVED BY

DIRECTOR, ENGINEERING SERVICES — P. MIKE TAYLOR, P.E.

PRINCIPAL ENGINEER, DESIGN — GARY S. NELSON, P.E.

ADOPTED: 01/2009
REVISED: 09/2010
SUPERSEDES:
CHECKED BY: JAG
SCALE: NTS
DWG/REV. BY: MBM

CONVERSION UNIT NOTES
INCLUDING BAR LIST & BENDING DIAGRAM

SPOKANE
ENGINEERING SERVICES
CITY OF SPOKANE, WASHINGTON

STANDARD PLAN No. B-101D3

Back to Section B - TOC

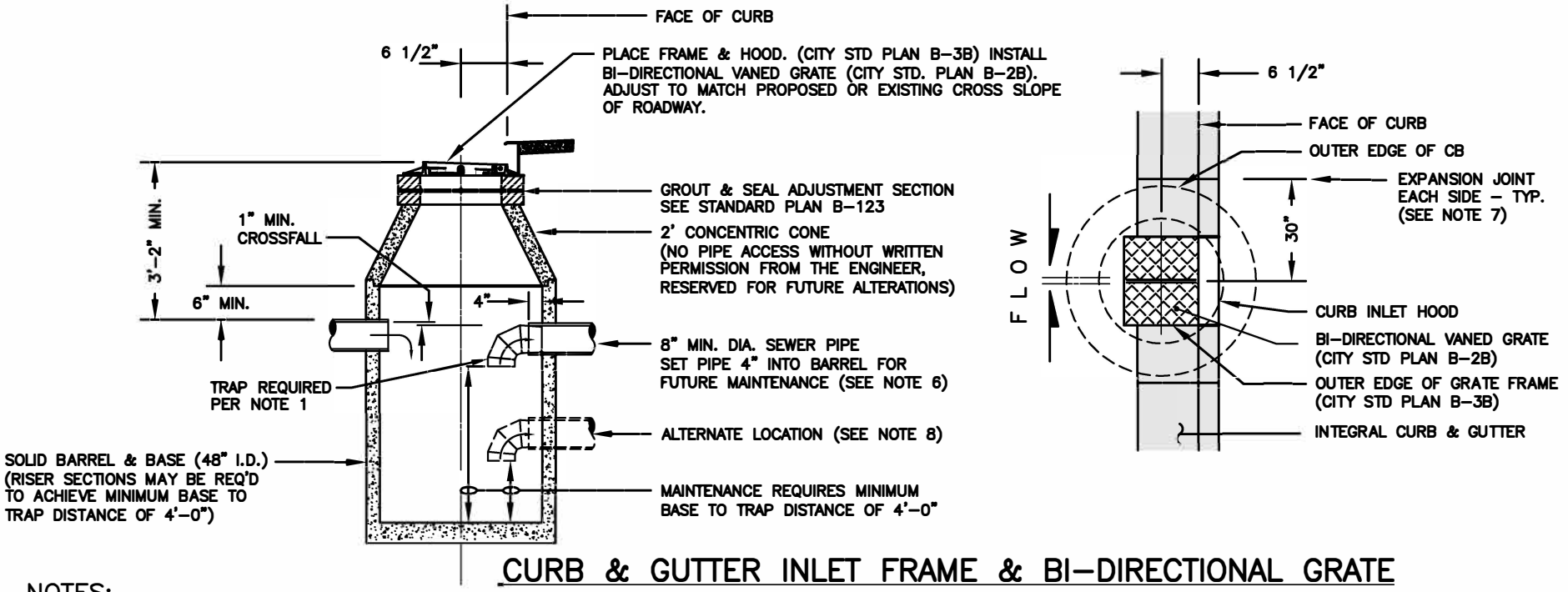

CURB & GUTTER INLET FRAME & BI-DIRECTIONAL GRATE

FOR USE IN SUMP SITUATIONS

NOTES:

1. SEE STD. PLAN B-120 FOR OUTLET TRAP. A TRAP IS REQUIRED ON ANY OUTLET PIPE. TRAP TO REMAIN REMOVABLE FOR MAINTENANCE THEREFORE NO MECHANICAL CONNECTION BETWEEN TRAP & OUTLET ALLOWED. VERTICAL PROJECTION OF TRAP NOT TO EXTEND BEYOND C/L OF ACCESS OPENING.
2. IF AN INLET PIPE IS PRESENT, THE INVERT SHALL BE HIGHER IN ELEVATION THAN THE OUTLET PIPE INVERT. A C.B. WITH AN INLET PIPE IS UTILIZED ONLY WHEN CONNECTING ADDITIONAL C.B.'S AT AN INTERSECTION OR WHEN ADDING GRATE INLET TYPE 3. A C.B. WITH INLET PIPE(S) IS NOT ALLOWED AS A SUBSTITUTE FOR A M.H.
3. SEE SEC. 9-12 FOR PRECAST CONCRETE CATCH BASINS.
4. SEE STD. PLAN B-122 FOR BASE SLAB & FOUNDATION DETAILS.
5. CONE & BARREL JOINTS MAY BE EITHER TONGUE & GROOVE OR REVERSE TONGUE & GROOVE.
6. ADJUSTMENT SECTION, CONE, BARREL, RISER SECTIONS (IF USED), & PIPE OPENINGS TO BE SEALED PER SECTION 7-05.
7. CONCRETE CURB & GUTTER SHALL BE BLOCKED OUT FOR A 5-FT LENGTH CENTERED @ THE C.B. TO ALLOW FOR LOCATING C.B. ADJACENT TO CURB.
8. USE ALTERNATE LOCATION FOR INLET/OUTLET PIPES ONLY IF INLET PIPE REQUIRES ADDITIONAL DEPTH FOR SLOPING. PROVIDE 4-FT DEPTH UNDER TRAP.
9. SEE STANDARD PLAN B-123 FOR ADJUSTMENT SECTION REQUIREMENTS.

APPROVED BY

ENGINEERING OPERATIONS MANAGER KYLE TWOHIG

CITY ENGINEER DANIEL ALBERT BULLER, P.E.

ADOPTED: 05/2007
REVISED: 04/2018
SUPERSEDES: 01/2017
CHECKED BY: JAG, GSN
SCALE: NTS
DWG./REV BY: RJS/MLD

CATCH BASIN-TYPE 3

ENGINEERING SERVICES
CITY OF SPOKANE, WASHINGTON

STANDARD PLAN No. **B-101E**

Back to Section B - TOC

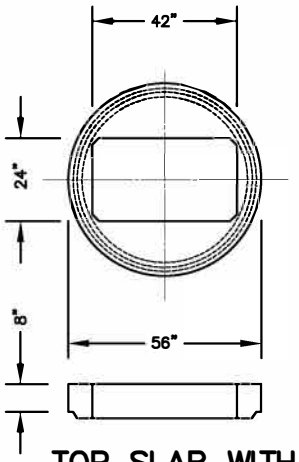

TOP SLAB WITH RECTANGULAR OPENING

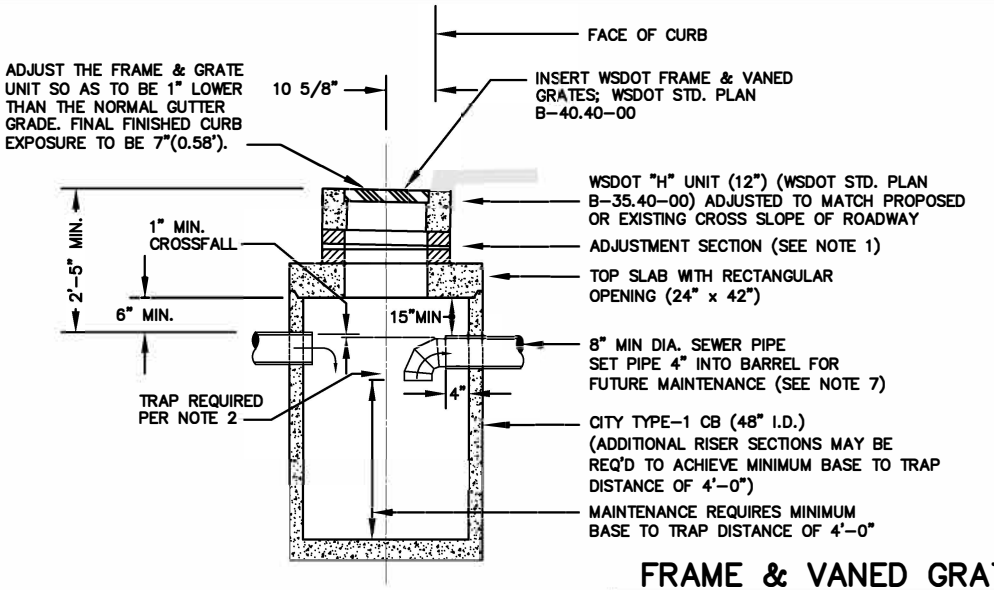

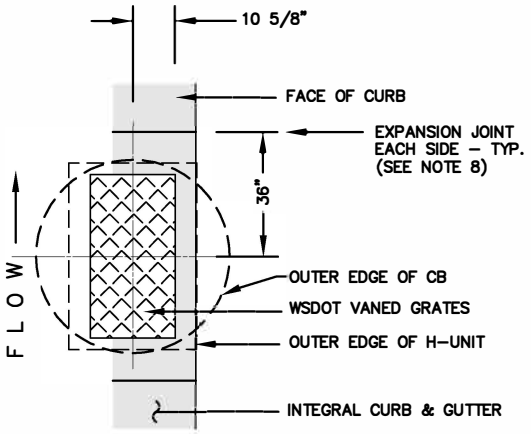

FRAME & VANED GRATES: NORMAL INSTALLATION

FOR USE IN CONTINUOUS GRADE SITUATIONS

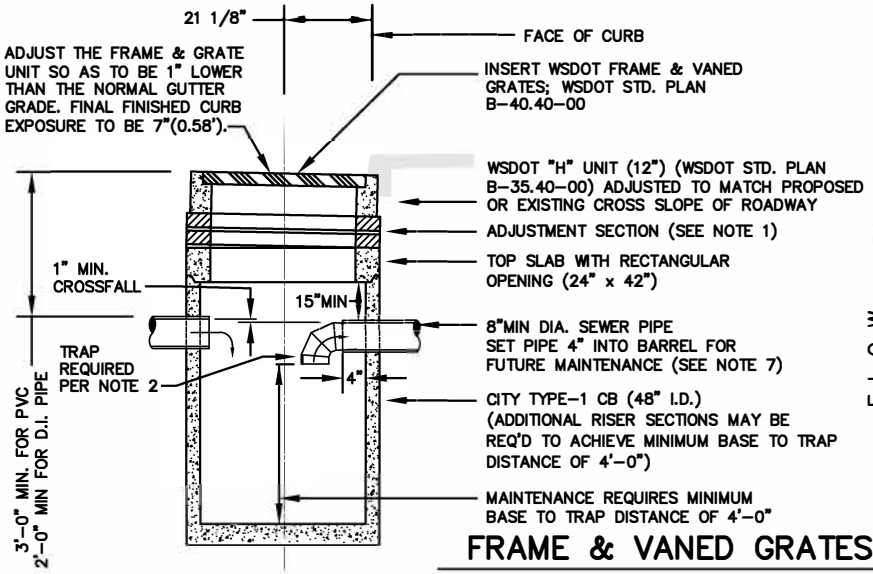

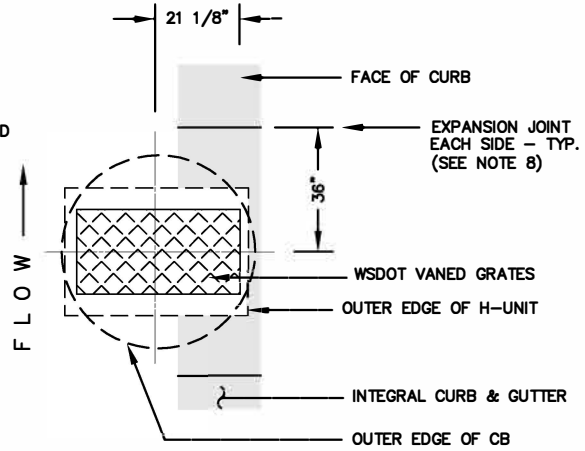

FRAME & VANED GRATES: ROTATED INSTALLATION

FOR USE IN CONTINUOUS GRADE SITUATIONS

NOTES:

1. GROUT & SEAL ADJUSTMENT SECTION. ADJUSTMENT SECTION FOR EXISTING STRUCTURES TO MATCH FIELD CONDITIONS AS REQUIRED (3" MIN-12" MAX). SEE STANDARD PLAN B-123 FOR ADJUSTMENT SECTION REQUIREMENTS.
2. SEE STD. PLAN B-120 FOR OUTLET TRAP. A TRAP IS REQUIRED ON ANY OUTLET PIPE. TRAP TO REMAIN REMOVABLE FOR MAINTENANCE THEREFORE NO MECHANICAL CONNECTION BETWEEN TRAP & OUTLET ALLOWED. VERTICAL PROJECTION OF TRAP NOT TO EXTEND BEYOND C/L OF ACCESS OPENING.
3. IF AN INLET PIPE IS PRESENT, THE INVERT SHALL BE HIGHER IN ELEVATION THAN THE OUTLET PIPE INVERT. A C.B. WITH AN INLET PIPE IS UTILIZED ONLY WHEN CONNECTING ADDITIONAL C.B.'s AT AN INTERSECTION OR WHEN ADDING GRATE INLET TYPE 3. A C.B. WITH INLET PIPE(S) IS NOT ALLOWED AS A SUBSTITUTE FOR A M.H.
4. SEE SEC. 9-12 FOR PRECAST CONCRETE CATCH BASINS.
5. SEE STD. PLAN B-122 FOR BASE SLAB & FOUNDATION DETAILS.
6. TOP SLAB & BARREL JOINTS MAY BE EITHER TONGUE & GROOVE OR REVERSE TONGUE & GROOVE.
7. ADJUSTMENT SECTION, TOP SLAB, BARREL, RISER SECTIONS (IF USED), & PIPE OPENINGS TO BE SEALED PER SECTION 7-05.
8. CONCRETE CURB & GUTTER SHALL BE BLOCKED OUT FOR A 6-FT LENGTH CENTERED @ THE C.B. TO ALLOW FOR LOCATING CB ADJACENT TO CURB.

APPROVED BY

ENGINEERING OPERATIONS MANAGER — KYLE TWOHIG

CITY ENGINEER — DANIEL ALBERT BULLER, P.E.

ADOPTED: 05/2007
REVISED: 04/2018
SUPERSEDES: 01/2017
CHECKED BY: JAG, GSN
SCALE: NTS
DWG./REV BY: RJS/MLD

CATCH BASIN TYPE 4

ENGINEERING SERVICES
CITY OF SPOKANE, WASHINGTON

STANDARD PLAN No. **B-101F**

Back to Section B - TOC

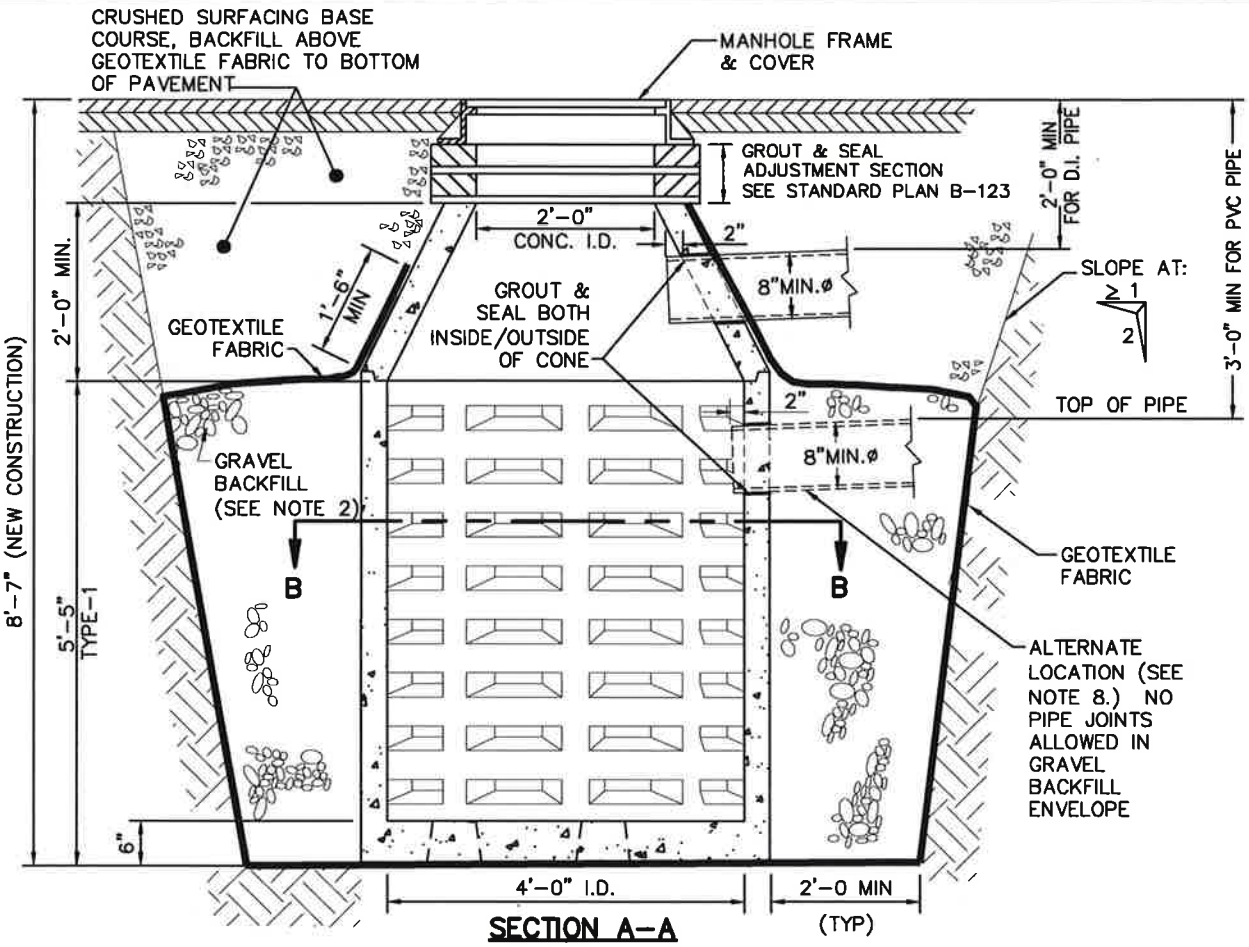

SECTION A–A

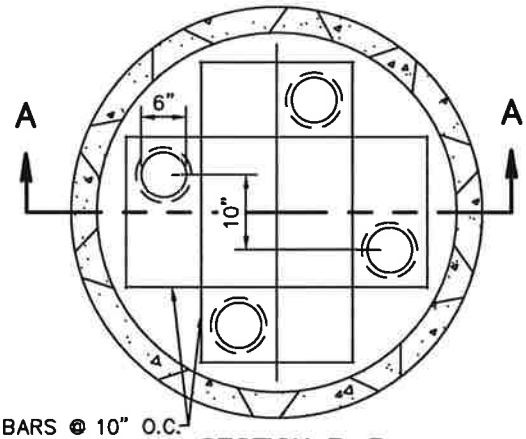

#4 BARS @ 10" O.C. EA WAY. (TYP) FOR STD PLANS B-102D & B-102F

SECTION B–B

NOTES:

1. SEE SEC 9-12 FOR PRECAST CONCRETE DRYWELLS.
2. SEE SEC 9-03.12(5) FOR GRAVEL BACKFILL FOR DRYWELLS.
3. SEE SEC 9-33 FOR WOVEN GEOTEXTILE FABRIC (MODERATE SURVIVABILITY CLASS A). OVERLAP ALL FABRIC JOINTS 1'-6" MIN. WRAP & SECURE FABRIC AROUND PIPE TO PREVENT MIGRATION OF FINES INTO GRAVEL ENVELOPE.
4. SEE STD PLANS B-112 & B-112A FOR MANHOLE FRAME & COVER.
5. SEE STD PLAN B-122 FOR BASE & FOUNDATION DETAILS.
6. CONE & BARREL JOINTS MAY BE EITHER TONGUE & GROOVE OR REVERSE TONGUE & GROOVE.
7. ADJUSTMENT SECTION, CONE & BARREL JOINTS TO BE SEALED PER SEC 7-05.
8. USE ALTERNATE PIPE LOCATION ONLY IF PIPE REQUIRES ADDITIONAL DEPTH FOR SLOPING, DEPTH OF COVER, OR OTHER RESTRICTIVE FIELD CONDITION.
9. SEE STANDARD PLAN B-123 FOR ADJUSTMENT SECTION REQUIREMENTS.
10. SEE STANDARD PLAN W-103 FOR CRUSHED ROCK REQUIREMENTS.

APPROVED BY

ENGINEERING OPERATIONS MANAGER — KYLE TWOHIG

CITY ENGINEER — DANIEL ALBERT BULLER, P.E.

ADOPTED: 02/1990
REVISED: 01/2017
SUPERSEDES: 04/2012
CHECKED BY: JAG
SCALE: NTS
DWG/REV. BY: SRM/MLD

DRYWELL – TYPE I

SPOKANE

ENGINEERING SERVICES
CITY OF SPOKANE, WASHINGTON

STANDARD PLAN No. **B-102C**

Back to Section B - TOC

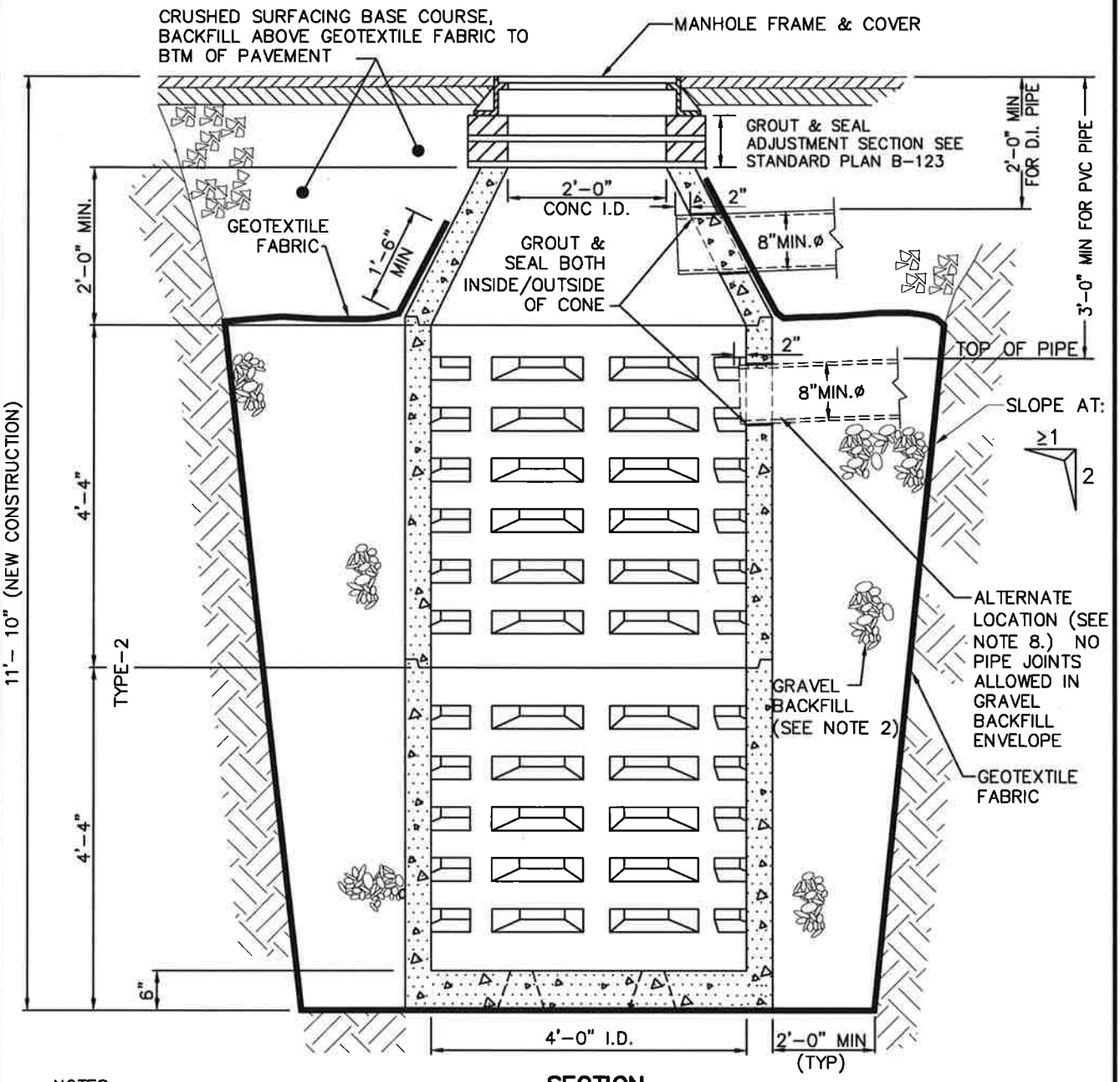

SECTION

NOTES:

1. SEE SEC 9-12 FOR PRECAST CONCRETE DRYWELLS.
2. SEE SEC 9-03.12(5) FOR GRAVEL BACKFILL FOR DRYWELLS.
3. SEE SEC 9-33 FOR WOVEN GEOTEXTILE FABRIC (MODERATE SURVIVABILITY, CLASS A). OVERLAP ALL FABRIC JOINTS 1'-6" MIN. WRAP & SECURE FABRIC AROUND PIPE TO PREVENT MIGRATION OF FINES INTO GRAVEL ENVELOPE..
4. SEE STD PLANS B-112 & B-112A FOR MANHOLE FRAME & COVER.
5. SEE STD PLANS B-102C & B-122 FOR BASE & FOUNDATION DETAILS.
6. CONE & BARREL JOINTS MAY BE EITHER TONGUE & GROOVE OR REVERSE TONGUE & GROOVE.
7. ADJUSTMENT SECTION, CONE & BARREL JOINTS TO BE SEALED PER SEC 7-05.
8. USE ALTERNATE PIPE LOCATION ONLY IF PIPE REQUIRES ADDITIONAL DEPTH FOR SLOPING, DEPTH OF COVER, OR OTHER RESTRICTIVE FIELD CONDITION.
9. SEE STANDARD PLAN B-123 FOR ADJUSTMENT SECTION REQUIREMENTS.
10. SEE STANDARD PLAN W-102 FOR CRUSHED ROCK REQUIREMENTS.

APPROVED BY

ENGINEERING OPERATIONS MANAGER — KYLE TWOHIG

CITY ENGINEER — DANIEL ALBERT BULLER, P.E.

ADOPTED:	2/1986
REVISED:	01/2017
SUPERSEDES:	04/2012
CHECKED BY:	JAG
SCALE:	NTS
DWG/REV. BY:	SRM/RDC

DRYWELL – TYPE 2

ENGINEERING SERVICES
CITY OF SPOKANE, WASHINGTON

STANDARD PLAN No. **B-102D**

Back to Section B - TOC

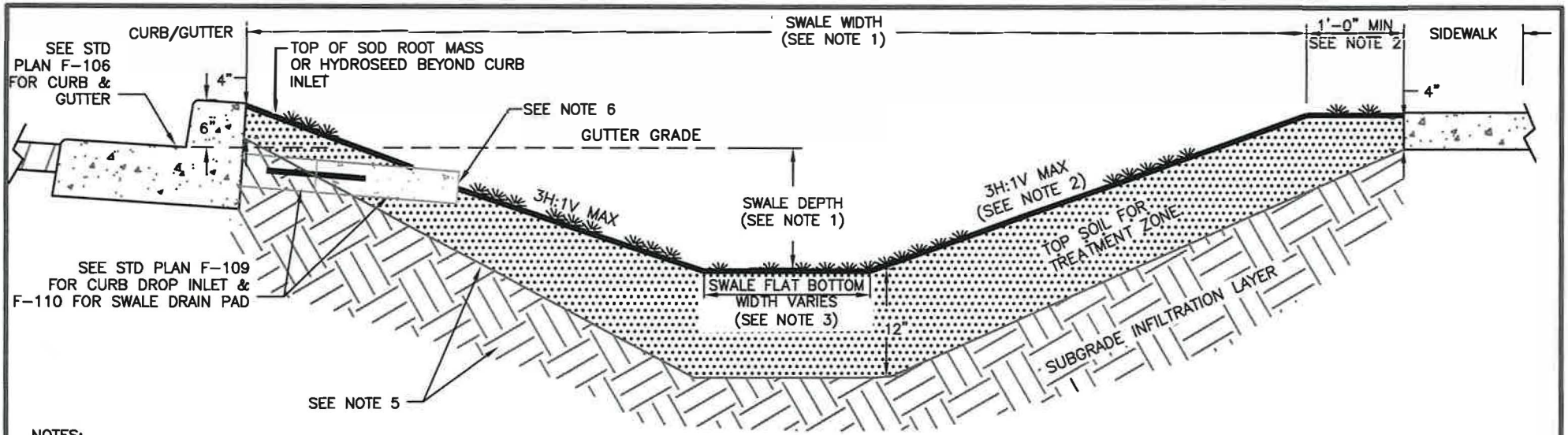

TYPICAL SECTION

NOTES:

1. SWALE DESIGN WIDTH & DEPTH WILL VARY AS REQ'D TO PROVIDE ADEQUATE TREATMENT STORAGE FOR THE GIVEN STORM VOLUME.
2. PROVIDE A 1'-0" MIN. FLAT & FLUSH AREA ADJACENT TO SIDEWALK WHEN USING A SIDE-SLOPE NO STEEPER THAN 3:1. IF FLAT AREA IS NOT PROVIDED ADJACENT TO SIDEWALK, THEN USE A SIDE-SLOPE NO STEEPER THAN 4:1. SEE DES. STD. 6.4-2.
3. WHEN SWALE WIDTH IS ADEQUATE, PROVIDE A PRACTICAL FLAT BOTTOM. OTHERWISE, A "V" BOTTOM IS ACCEPTABLE.
4. DRYWELL SHALL BE INSTALLED AT A 10 FT MIN DISTANCE FROM LOWEST INLET TO PREVENT DIRECT INFLOW INTO THE OVERFLOW GRATE. DRYWELL MUST BE LOCATED WITHIN 8' OF ROADWAY FOR ACCESS & MAINTENANCE. PROVIDE A 3" MIN FREEBOARD BETWEEN LOWEST SWALE INLET & TOP OF DRYWELL GRATE OR OVERFLOW BERM.
5. SEE THE SPOKANE REGIONAL STORMWATER MANUAL (SRSM) INCLUDING TABLE 6-1 FOR INFILTRATION & OTHER DESIGN CRITERIA FOR TREATMENT ZONE & SUBGRADE INFILTRATION LAYER.
6. 2" EXPOSURE BETWEEN TOP OF CURB INLET & SWALE DRAIN PAD TO TOP OF SOD ROOT MASS OR HYDROSEED WITH A DRYLAND GRASS MIX.
7. SWALE OVERFLOW GRASS BERMS SHALL HAVE A 2-FT MIN FLAT TOP WIDTH (IN THE DIRECTION OF FLOW) & A SIDE-SLOPE NO STEEPER THAN 3:1.

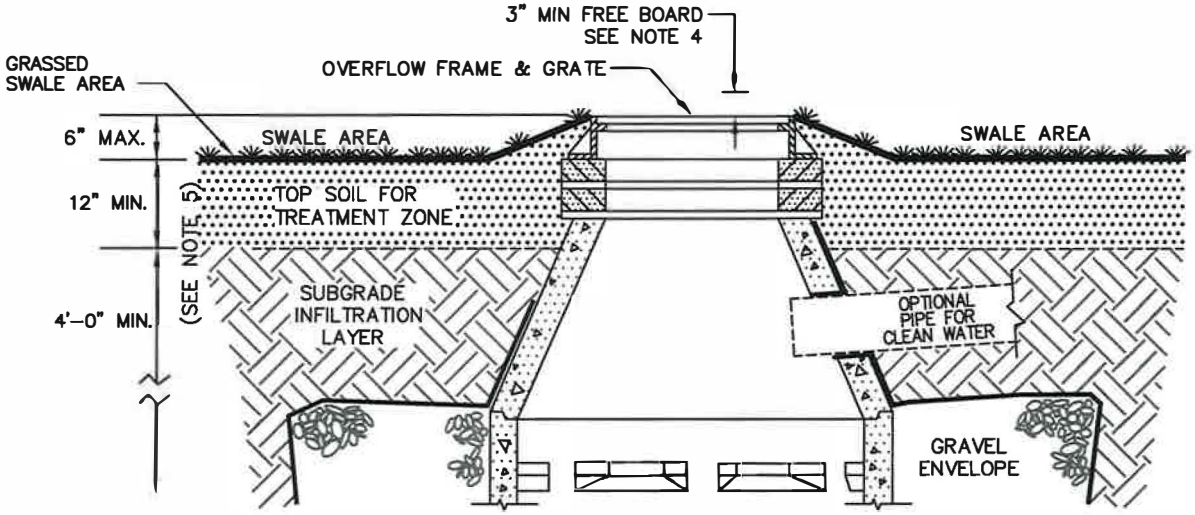

DRYWELL IN SWALE

SEE STD PLANS B-102C & B-102D FOR DRYWELL REQ'MTS

APPROVED BY

DIRECTOR, ENGINEERING SERVICES — PERRY M. TAYLOR, P.E.

PRINCIPAL ENGINEER, CONST. — KENNETH M. BROWN, P.E.

ADOPTED:	06/1994
REVISED:	04/2012
SUPERSEDES:	09/2010
CHECKED BY:	SJS
SCALE:	NTS
REVISED BY:	DSH

BIO-INFILTRATION SWALE W/ OVERFLOW STRUCTURE

ENGINEERING SERVICES
CITY OF SPOKANE, WASHINGTON

STANDARD PLAN No. B-102F

Back to Section B - TOC

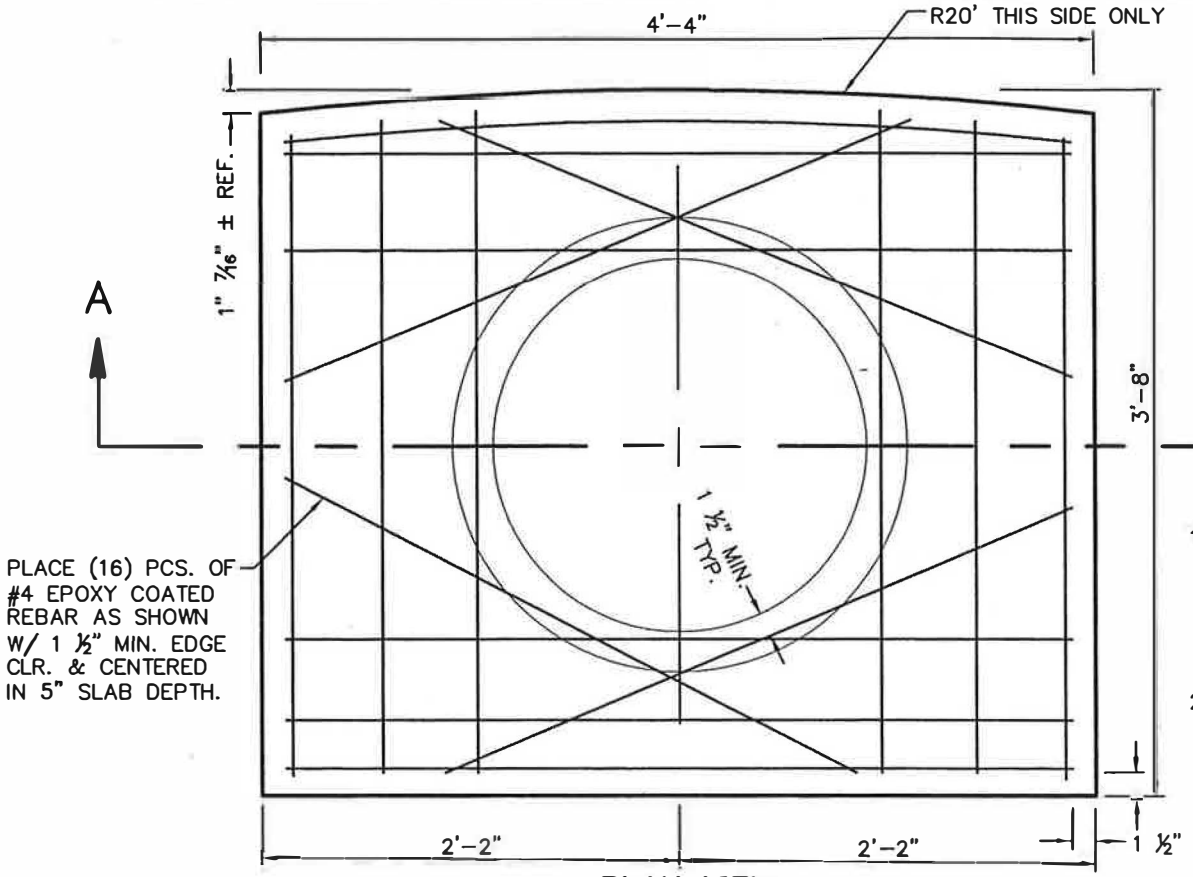

NOTES:

1. SEE STANDARD PLAN B-114 FOR CATCH BASIN TYPE 2 FRAME & COVER.
2. UTILIZE CLASS 4000, AIR-ENTRAINED CONCRETE FOR CATCH BASIN COVER & SILL BLOCK.

PLAN VIEW

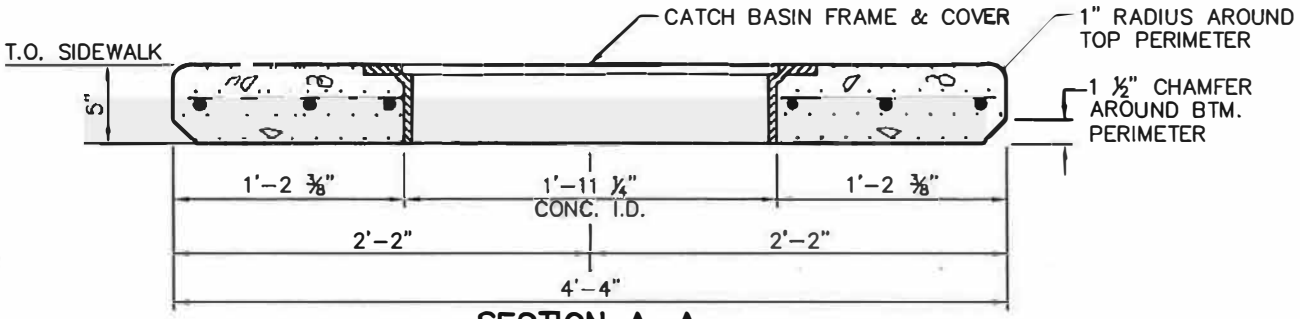

SECTION A-A

CATCH BASIN COVER

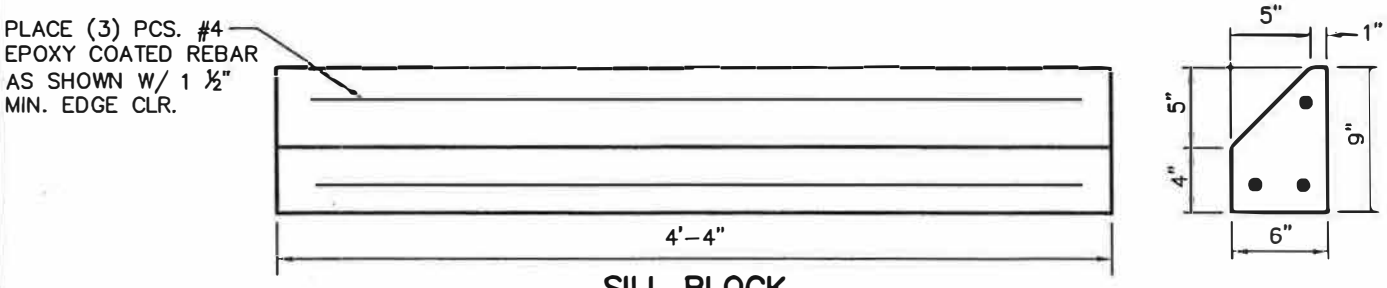

SILL BLOCK

APPROVED BY

DIRECTOR, ENGINEERING SERVICES DAVE NAKAGAWARA, P.E.

PRINCIPAL ENGINEER, DESIGN KEN BROWN, P.E.

ADOPTED: 2/86
REVISED: 7/02
SUPERSEDES: 2/90
SCALE: 1"=1'-0"
DWG. BY: DGB/MDH

CATCH BASIN COVER TYPE 2

WITH SILL BLOCK

ENGINEERING SERVICES
CITY OF SPOKANE, WASHINGTON

STANDARD PLAN No. B-105

Back to Section B - TOC

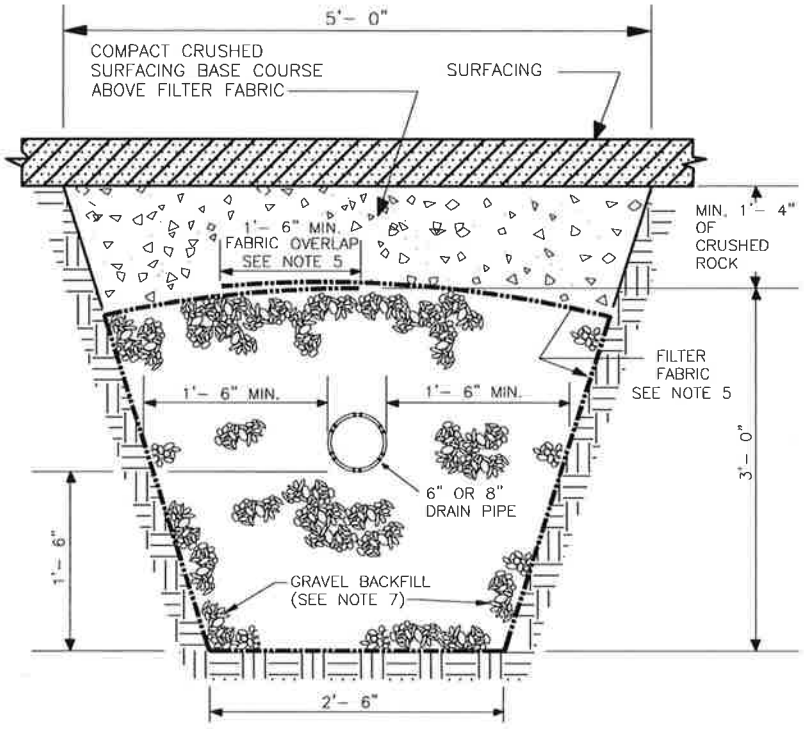

SECTION A–A

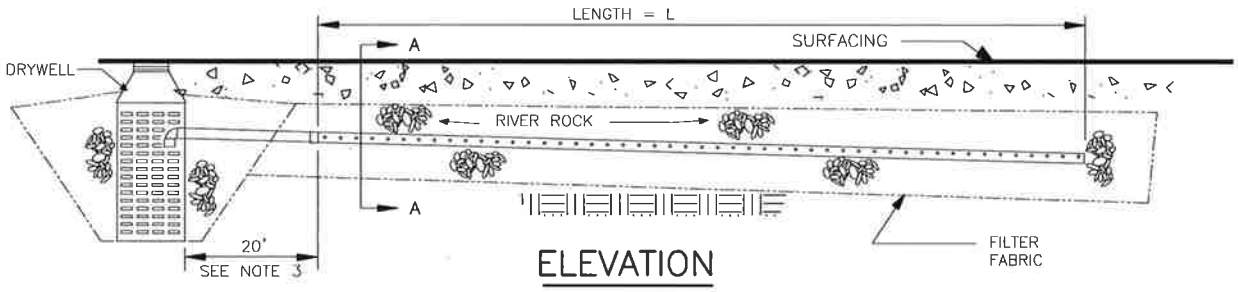

ELEVATION

NOTES:

1. USE ABSORPTION TRENCH WHERE CALLED FOR IN THE PLANS OR AS DIRECTED BY THE ENGINEER & IN ACCORDANCE W/ SECTION 7–05.3(101).
2. DRAIN PIPE TO BE LAID ON A –0.5% TO –1.0% GRADE AWAY FROM THE DRYWELL.
3. DRAIN PIPE TO BE SOLID WALL FOR 1ST 20–FT FROM DRYWELL. REMAINDER OF DRAIN PIPE TO BE PERFORATED PER SECTION 9–05.
4. OUTLET TRAP PER STANDARD PLAN B–120 TO BE INSTALLED ON DRYWELL EXIT PIPE. SEAL PIPE COLLAR TO DRYWELL.
5. OVERLAP FABRIC A MINIMUM OF 1'–6". SEE SECTION 9–33 FOR WOVEN GEOTEXTILE FABRIC (MODERATE SURVIVABILITY CLASS A).
6. SEE STANDARD PLANS B–102C, & D FOR DRYWELL DETAILS.
7. SEE SECTION 9–03.12(5) FOR GRAVEL BACKFILL FOR DRYWELLS.

APPROVED BY

ENGINEERING OPERATIONS MANAGER KYLE TWOHIG

CITY ENGINEER DANIEL ALBERT BULLER, P.E.

ADOPTED:	6/1994
REVISED:	01/2017
SUPERSEDES:	05/2007
CHECKED BY:	JAG
SCALE:	NTS
DWG/REV. BY:	REP/RLB

ABSORPTION TRENCH DETAILS
FOR STORM DRAINAGE

SPOKANE

ENGINEERING SERVICES
CITY OF SPOKANE, WASHINGTON

STANDARD PLAN No. B–111

Back to Section B - TOC

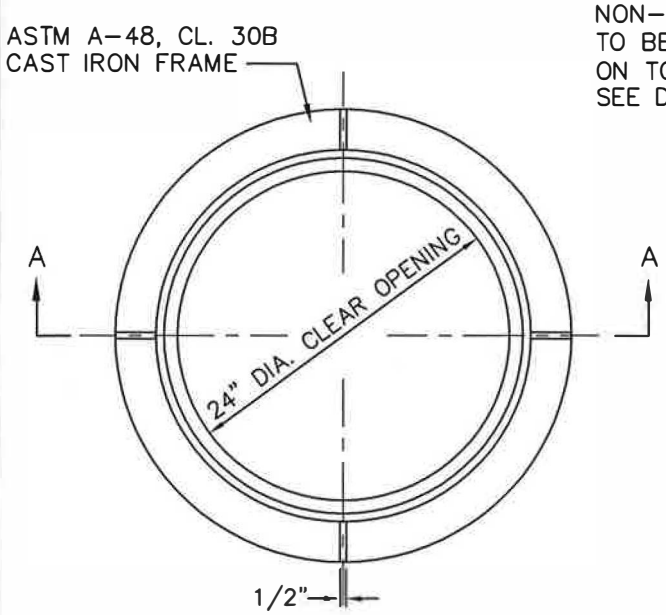

CAST IRON FRAME

MIN. WEIGHT 168 LBS.

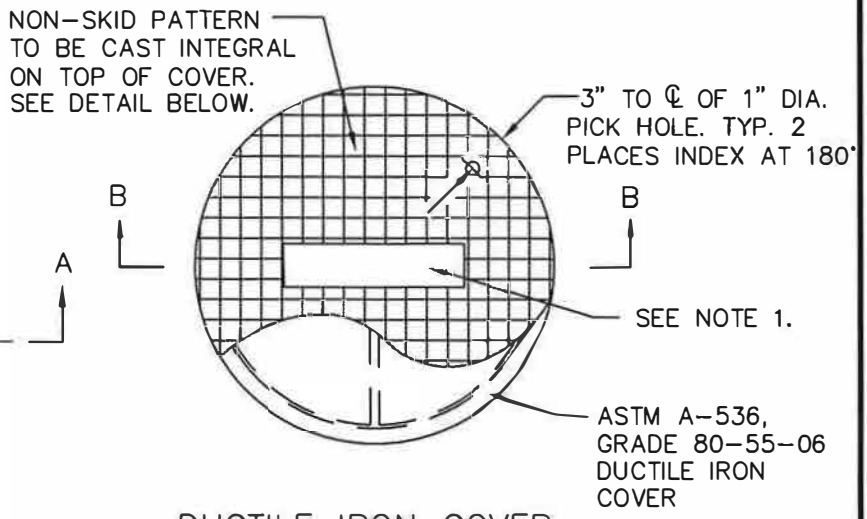

DUCTILE IRON COVER

MIN. WEIGHT 118 LBS.

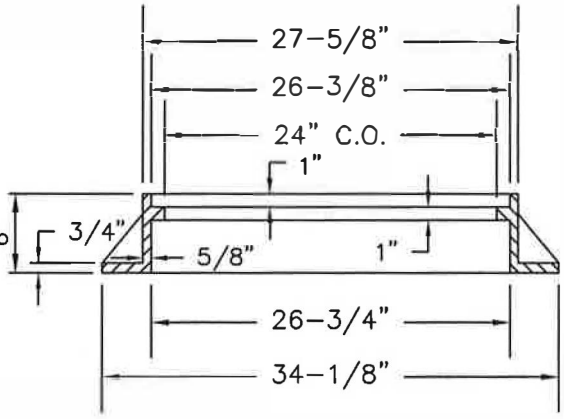

SECTION A-A

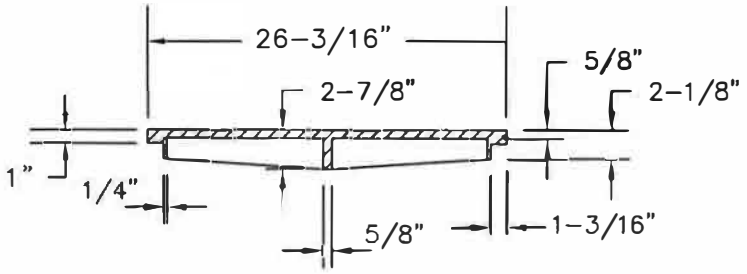

SECTION B-B

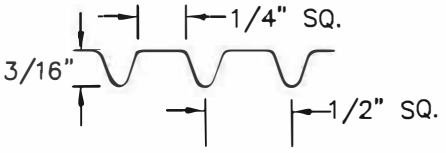

COVER SKID DESIGN DETAIL

NOTES:

1. THE APPROPRIATE WORD "SEWER", "STORM", OR "WATER" SHALL BE EMBOSSED ON EACH MANHOLE COVER WITH 3/16" RAISED LETTERS.
2. MATING SURFACES SHALL BE FINISHED TO ASSURE NON-ROCKING FIT W/ ANY COVER POSITION.

APPROVED BY

DIRECTOR, ENGINEERING SERVICES TOM L. ARNOLD, P.E.

PRINCIPAL ENGINEER, DESIGN GARY S. NELSON, P.E.

ADOPTED:	2/1990
REVISED:	05/2007
SUPERSEDES:	6/1995
CHECKED BY:	JAG
SCALE:	NTS
DWG/REV. BY:	RLB

MANHOLE FRAME AND COVER

ENGINEERING SERVICES
CITY OF SPOKANE, WASHINGTON

STANDARD PLAN No. B-112

Back to Section B - TOC

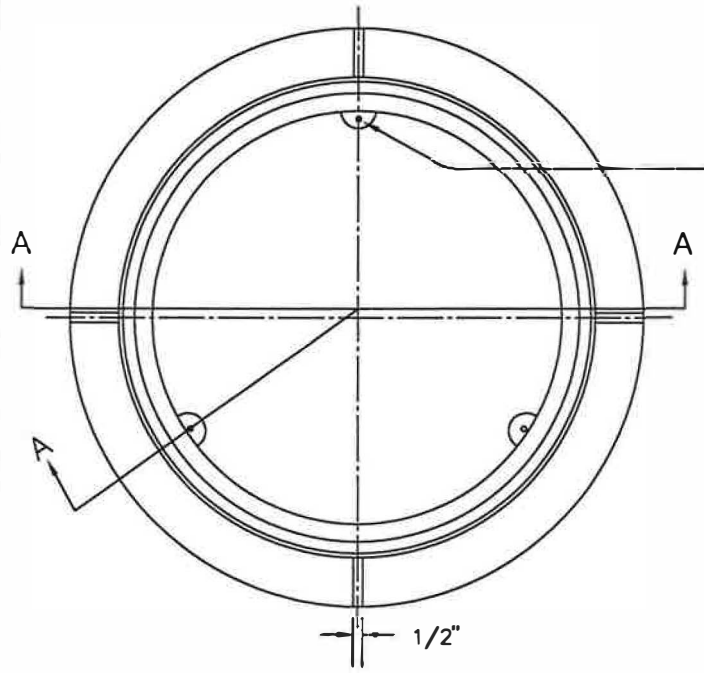

CAST IRON FRAME

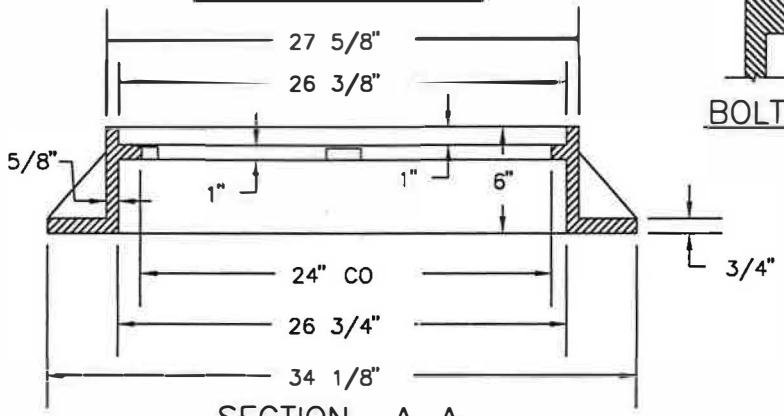

SECTION A–A

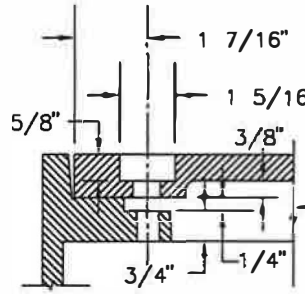

BOLT–DOWN DETAIL

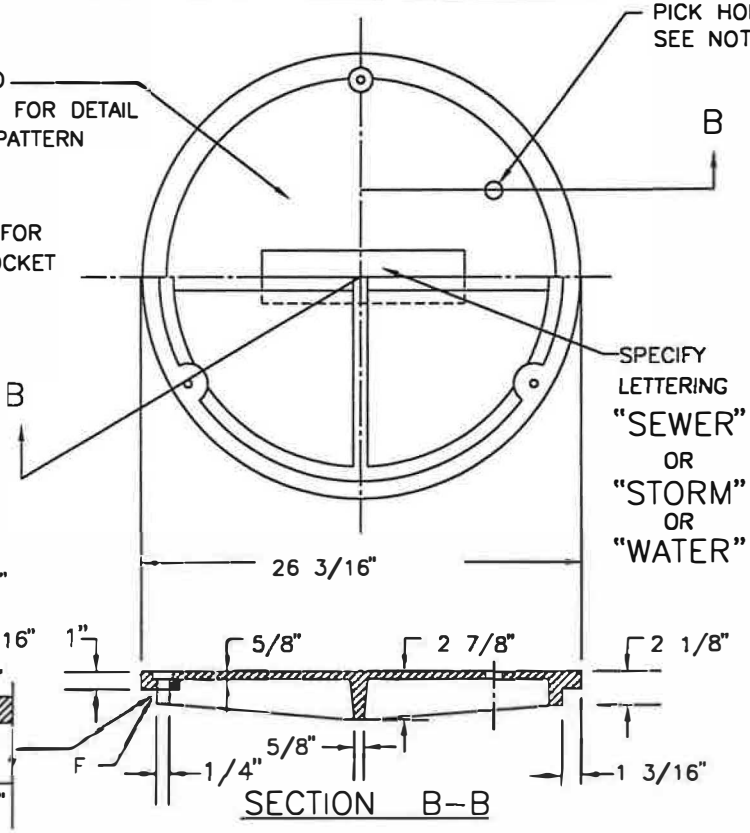

SECTION B–B

DUCTILE IRON COVER

DRAWING NOTES:

1. MATERIALS SHALL CONFORM TO SECTION 9–05.15(1) OF THE SPECIFICATIONS
2. 3" TO ℄ OF 1" DIA. PICK HOLE. TYP. 2 PLACES INDEXED AT 180°.

APPROVED BY			
CITY ENGINEER — BRAD BLEGEN, P.E.	7/95	SCALE: NONE	MANHOLE FRAME AND COVER 3–POINT BOLTDOWN
SUPERVISORY ENGINEER, DESIGN — LARRY NEIL, P.E.	7/95	ADOPTED: 2/90	
		REVISED: 6/95	CONSTRUCTIONS SERVICES PUBLIC WORKS DIVISION CITY OF SPOKANE, WASHINGTON
		SUPERSEDES: 7/91	STANDARD PLAN No. B–112A

Back to Section B - TOC

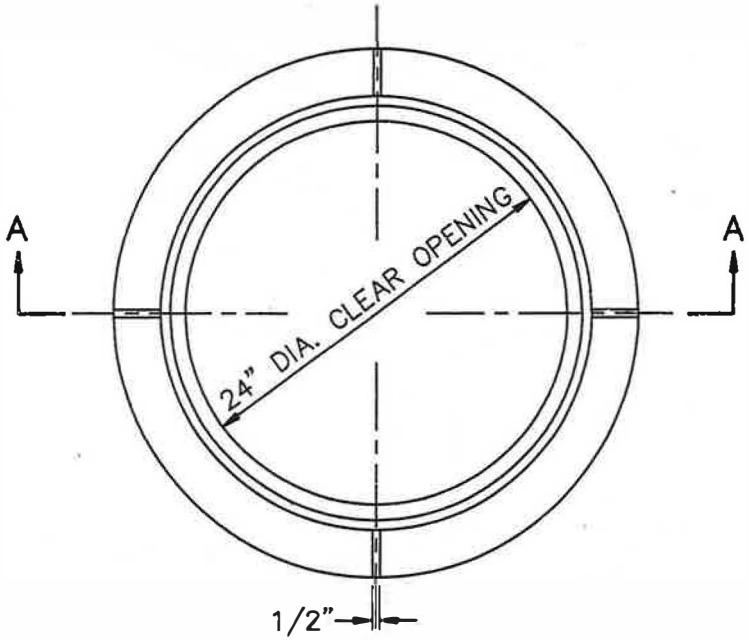

CAST IRON FRAME MIN. WEIGHT 168 LBS.

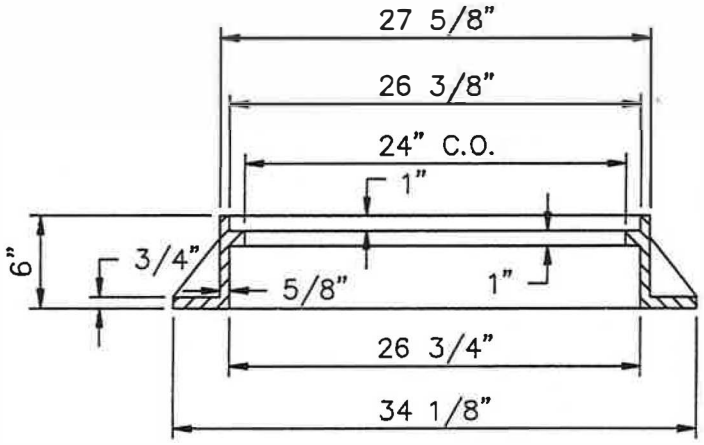

SECTION A–A

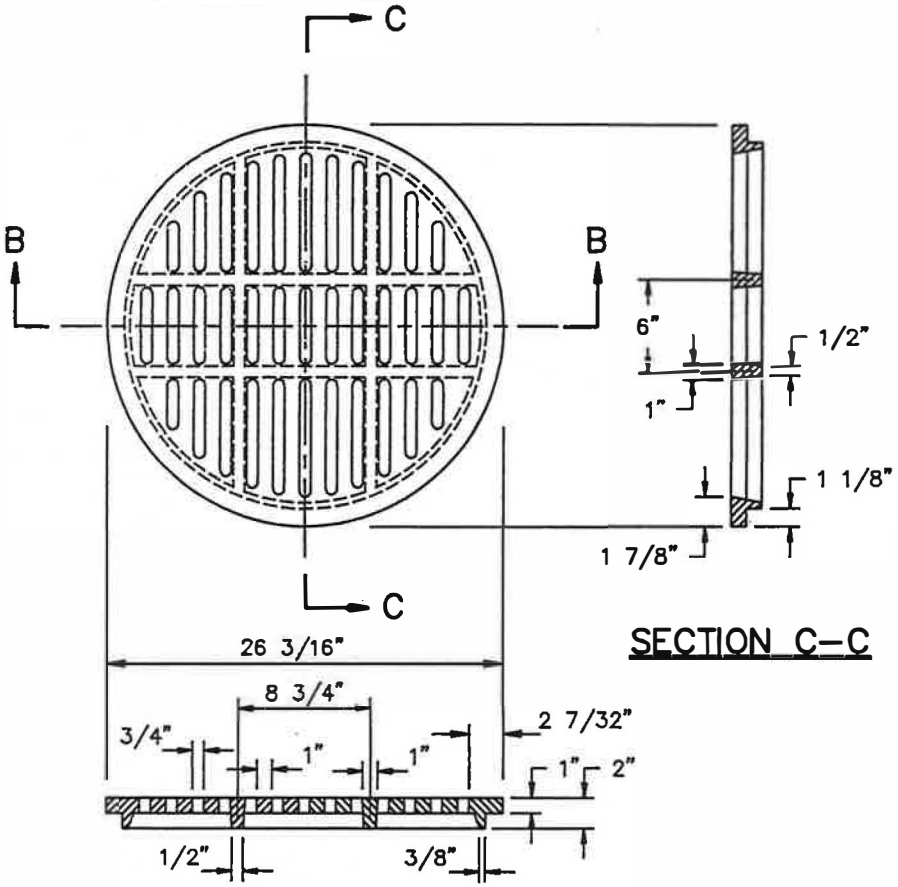

SECTION C–C

SECTION B–B

DRAWING NOTES:

1. See Section 9–05.15 (2).
2. Frame: ASTM A48 Class 30 Gray Iron.
3. Grate: ASTM A536 Class 80–55–06 Ductile Iron.
4. Foundry Name, Date, Material and Heat Number In Raised Letters on Interior Face of Each Casting.
5. Fit Tolerance 1/8"(+/–).

APPROVED BY	SCALE NTS	CATCH BASIN FRAME & GRATE	
CITY ENGR.	ADOPTED 2/90		
CH. DESIGN ENGR.	REVISED	DEPT. OF PUBLIC WORKS ENGR. DIVISION SPOKANE, WA	STANDARD PLAN No. B–113
	SUPERSEDES		

Back to Section B - TOC

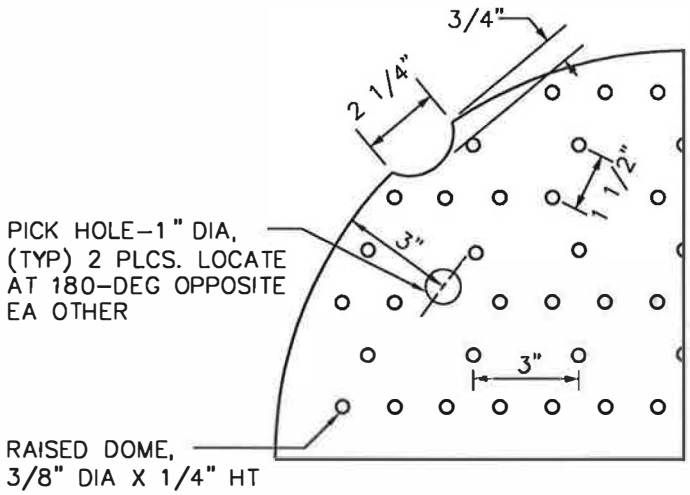

1/4 PLAN OF COVER

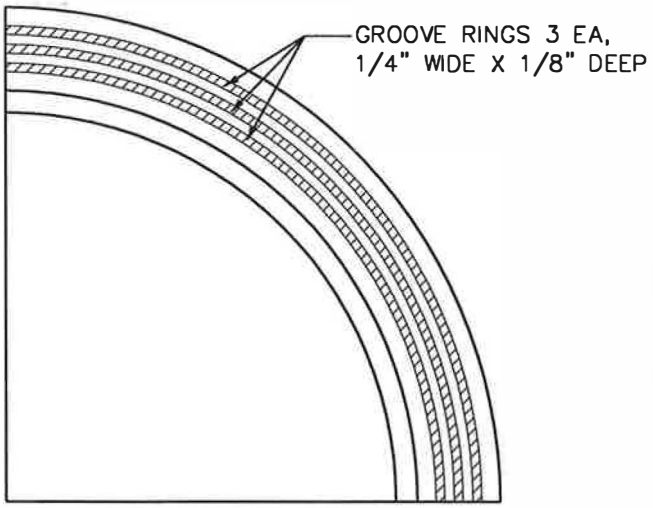

1/4 PLAN OF FRAME

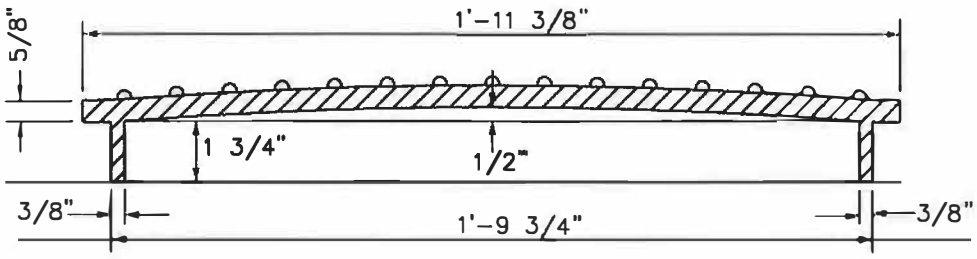

SECTION – COVER

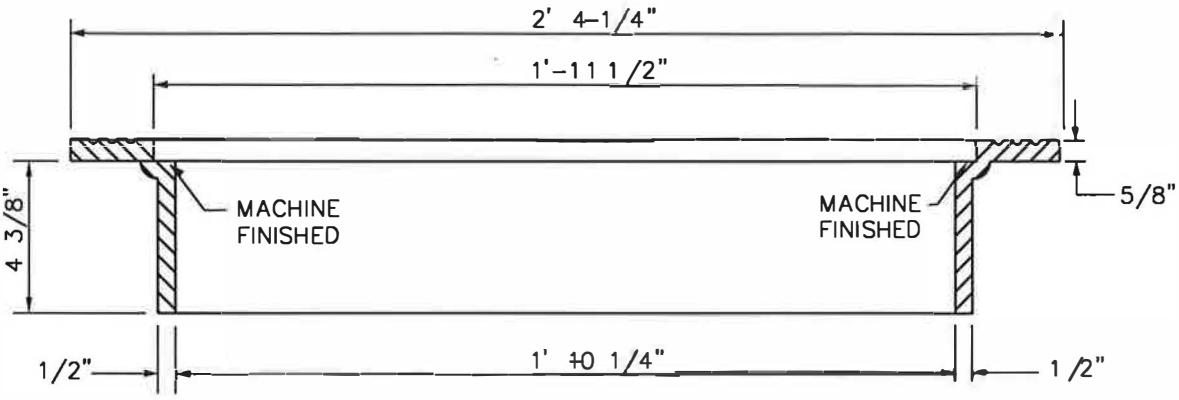

SECTION – FRAME

NOTES:

1. SEE SEC 9-05.15 FOR METAL CASTINGS.
2. ALL MATING SURFACES SHALL BE MACHINE FINISHED TO ENSURE A NON-ROCKING FIT.

APPROVED BY DIRECTOR, ENGINEERING SERVICES TOM L. ARNOLD, P.E. PRINCIPAL ENGINEER, DESIGN KEN M. BROWN, P.E.	ADOPTED: 2/86 REVISED: 4/2004 SUPERSEDES: 7/02 SCALE: NTS DWG/REV. BY: TSS	CATCH BASIN FRAME & COVER TYPE 2	STANDARD PLAN No. B–114
		SPOKANE ENGINEERING SERVICES CITY OF SPOKANE, WASHINGTON	

Back to Section B - TOC

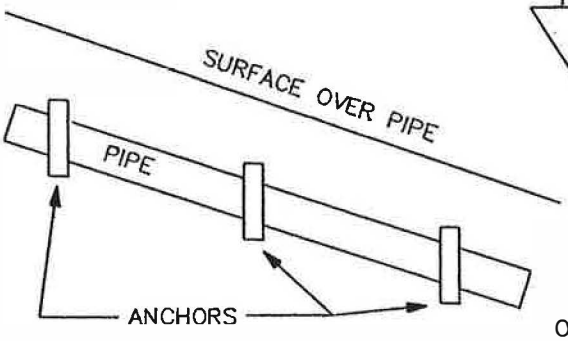

ELEVATION
CONCRETE PIPE ANCHORS

CONSTRUCTION OF ANCHOR FOR TRENCH WITH SLOPING WALLS

CONSTRUCTION OF ANCHOR FOR TRENCH WITH VERTICAL WALLS

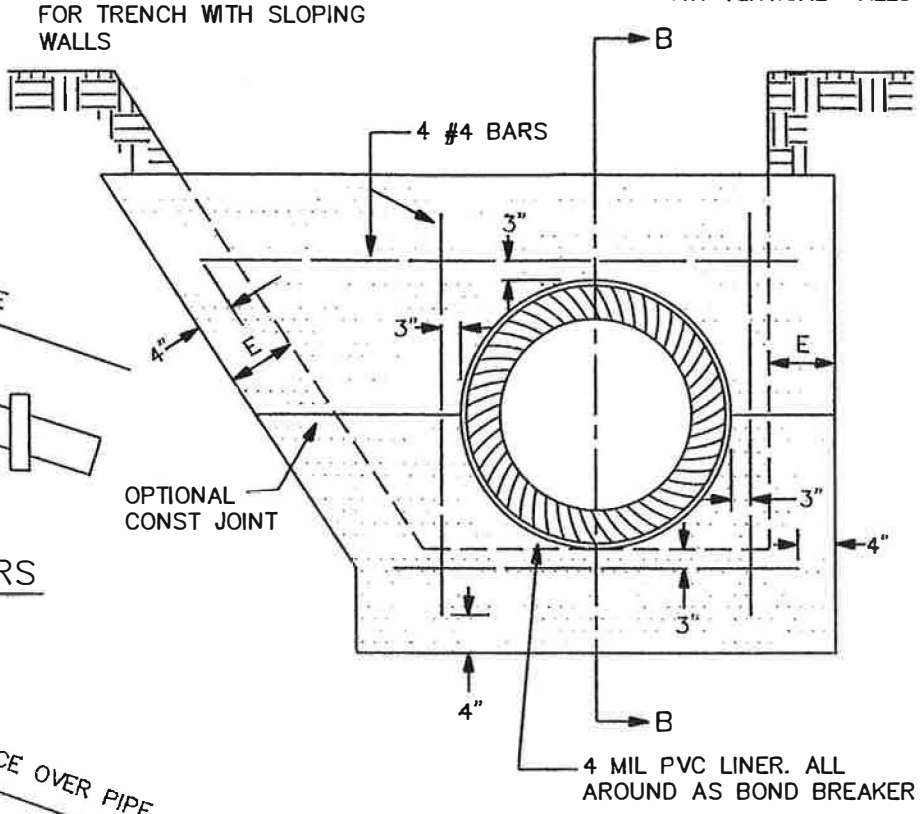

SECTION A–A

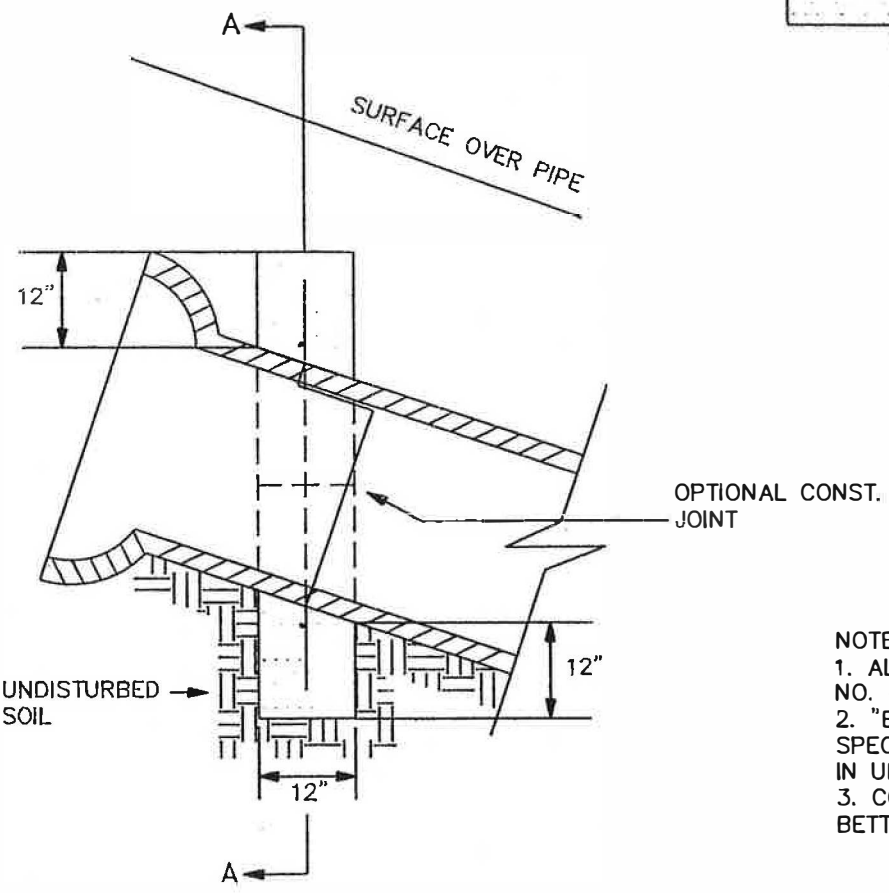

SECTION B–B

NOTES:
1. ALL REINFORCING STEEL SHALL BE NO. 4 BARS.
2. "E" SHALL BE 8" UNLESS OTHERWISE SPECIFIED, AND SHALL BE CONSTRUCTED IN UNDISTURBED SOIL.
3. CONCRETE SHALL BE CLASS 3000 OR BETTER.

APPROVED BY CITY ENGR. _____ SUPV. DES. ENGR. _____	SCALE NONE ADOPTED 6/92	CONCRETE PIPE ANCHOR
	REVISED _____ SUPERSEDES _____	DEPT. OF PUBLIC WORKS ENGR. DIVISION SPOKANE, WA
		STANDARD PLAN No. B–117

Back to Section B - TOC

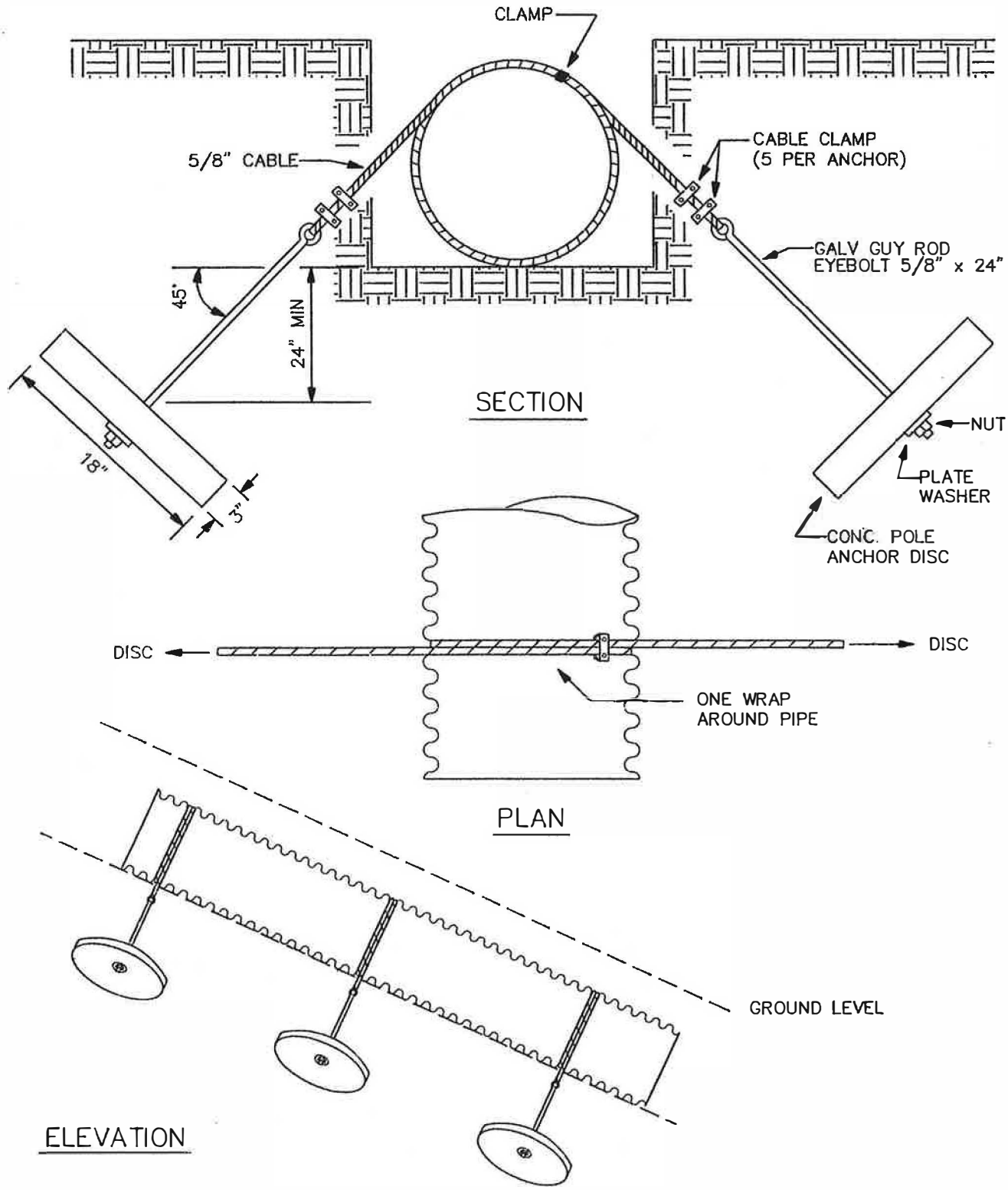

APPROVED BY CITY ENGR. _____ SUPV. DES. ENGR. _____	SCALE NONE ADOPTED 6/92	CORRUGATED PIPE ANCHOR
	REVISED _____ SUPERSEDES _____	DEPT. OF PUBLIC WORKS ENGR. DIVISION SPOKANE, WA
		STANDARD PLAN No. B-117A

Back to Section B - TOC

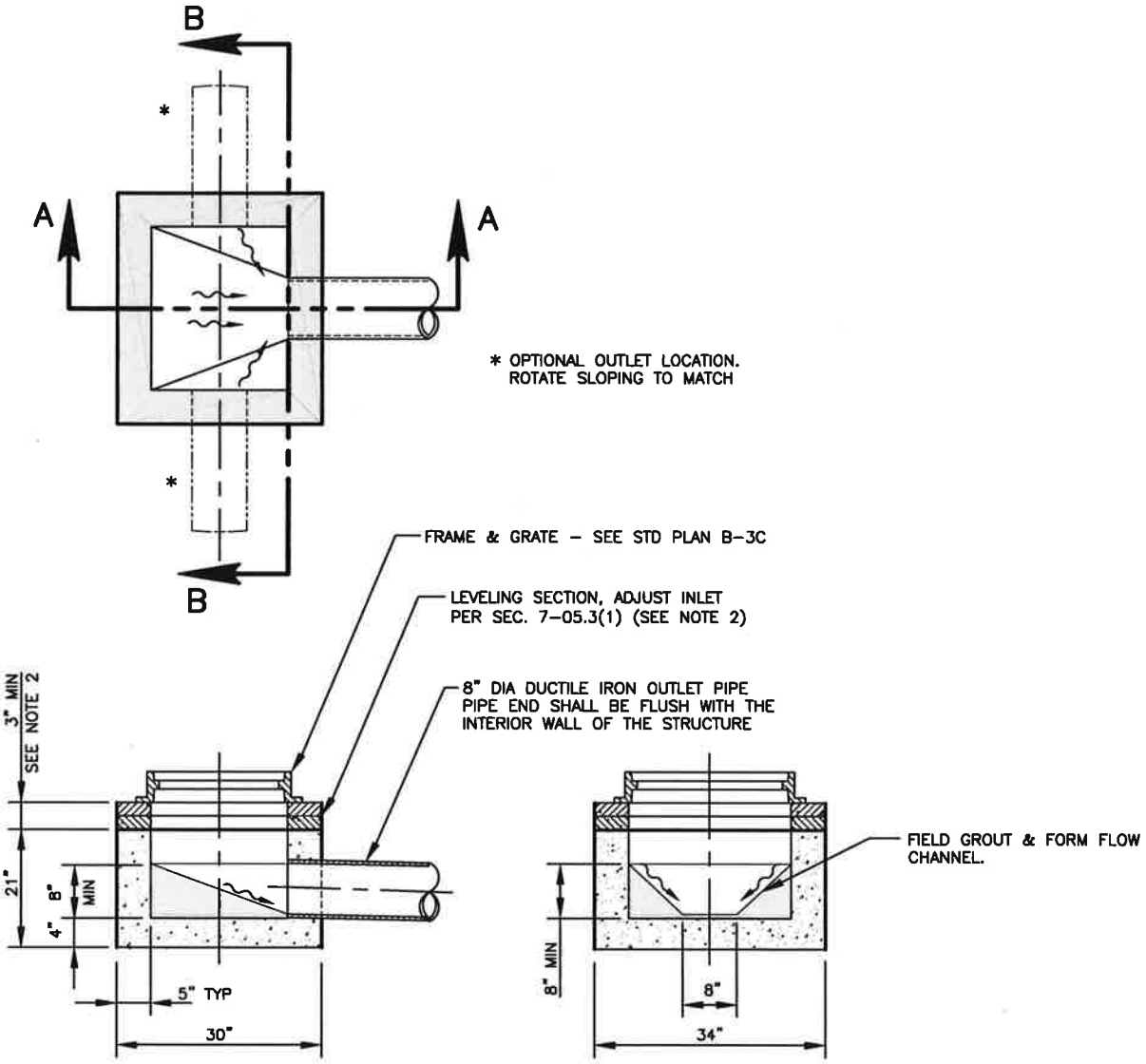

SECTION A–A

SECTION B–B

NOTES:

1. CONCRETE USED IN CONSTRUCTION OF THIS BOX SHALL BE CLASS 4000 AS SPECIFIED IN SECTION 6-02 OF STANDARD SPECIFICATIONS.
2. GROUT & SEAL ADJUSTMENT SECTION. SEE STANDARD PLAN B-123.

APPROVED BY: ENGINEERING OPERATIONS MANAGER KYLE TWOHIG CITY ENGINEER DANIEL ALBERT BULLER, P.E.	ADOPTED: 2/1990 REVISED: 01/2017 SUPERSEDES: 05/2007 CHECKED BY: JAG SCALE: NTS DWG/REV. BY: DGB/MLD	GRATE INLET STRUCTURE TYPE 3 ENGINEERING SERVICES CITY OF SPOKANE, WASHINGTON	STANDARD PLAN No. B-119

Back to Section B - TOC

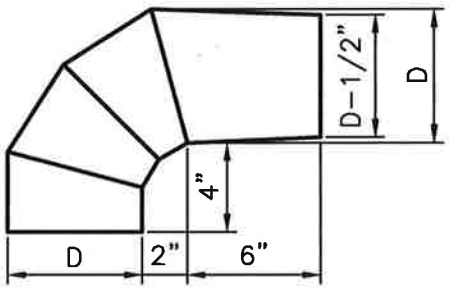

TYPE 60A TRAP

1. TRAP TO BE MADE OF GALVANIZED SHEET METAL. MINIMUM THICKNESS 18 GA.

2. ALL JOINTS TO BE SEAMED, SPOT WELDED, AND SOLDERED OR CONTINUOUSLY BUTT–WELDED.

3. EXTERIOR WELDS SHALL BE GROUND SMOOTH.

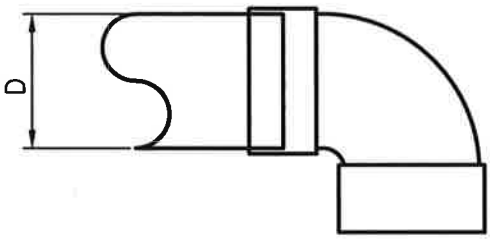

PVC BELL ELBOW TRAP

1. 6" OR 8" WITH GASKETS REMOVED.

NOTES:

1. DIMENSION "D" IS NOMINAL DIAMETER OF OUTLET PIPE.

APPROVED BY ENGINEERING OPERATIONS MANAGER KYLE TWOHIG CITY ENGINEER DANIEL ALBERT BULLER, P.E.	ADOPTED: PRE–1986 REVISED: 01/2017 SUPERSEDES: 05/2007 CHECKED BY: JAG SCALE: NTS DWG/REV. BY: REP/MLD	OUTLET TRAP ENGINEERING SERVICES CITY OF SPOKANE, WASHINGTON
		STANDARD PLAN No. B–120

Back to Section B - TOC

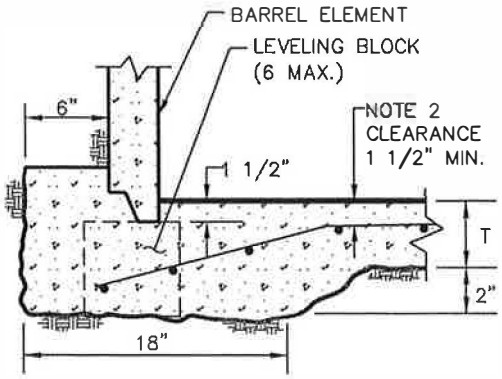

CAST IN PLACE BASE SLAB
(CAST AROUND BARREL)

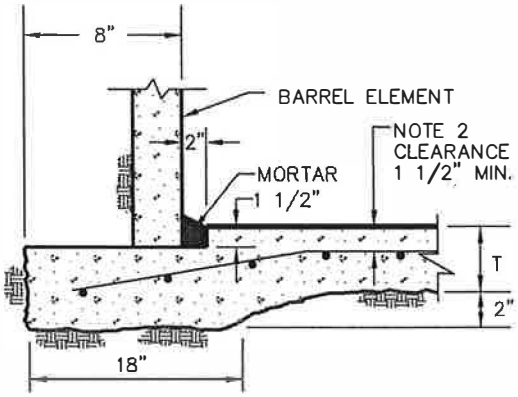

CAST IN PLACE BASE SLAB
(SEPARATE FROM BARREL)

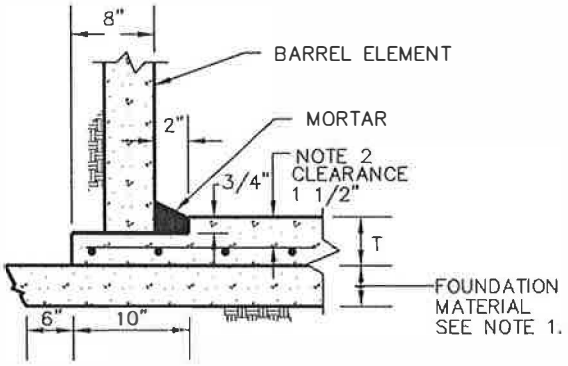

PRECAST BASE SLAB

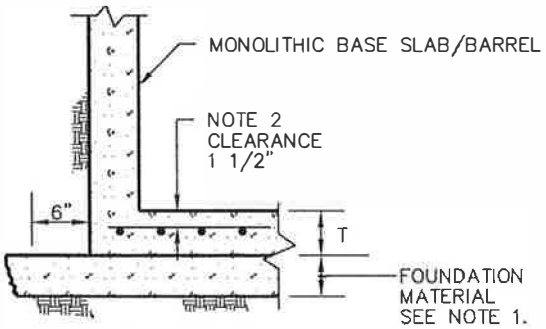

PRECAST MONOLITHIC
BASE SLAB / BARREL

BASE SLAB MINIMUM REINFORCEMENT SCHEDULE

BARREL SIZE	T	METHOD OF SLAB CONSTRUCTION	
		PRECAST OR CAST-IN-PLACE	MONOLITHIC SLAB & BARREL
≤ 48"	6"	#4 @ 10" E.W.	#4 @ 10" E.W.
54"	8"	#4 @ 12" E.W.	#4 @ 12" E.W.
72"	8"	#4 @ 6 1/2" E.W.	#4 @ 10" E.W.
96"	12"	#4 @ 6" E.W.	#4 @ 8" E.W.

GENERAL NOTES:

1. 6" MINIMUM COMPACTED DEPTH OF BEDDING MATERIAL MEETING THE REQUIRMENTS OF THE SPECIAL PROVISIONS, OR 4" OF GROUT AS DIRECTED BY THE ENGINEER. COMPACT BEDDING MATERIAL TO 92%, MINIMUM.
2. SEE SCHEDULE FOR BASE SLAB REINFORCEMENT.
3. SEE PLAN B-102C BASE DETAILS FOR DRYWELLS

APPROVED BY
Katy Allen
DIRECTOR, ENGINEERING SERVICES KATY D. ALLEN, P.E.
PRINCIPAL ENGINEER, DESIGN JIM R. SMITH, P.E.

ADOPTED: 2/90
REVISED: 12/98
SUPERSEDES: 7/91
SCALE: N.T.S.
DWG./REV. BY: REP

CATCH BASIN, DRYWELL & MANHOLE
BASE SLAB AND FOUNDATION DETAILS

ENGINEERING SERVICES
CITY OF SPOKANE, WASHINGTON

STANDARD PLAN No. B-122

Back to Section B - TOC

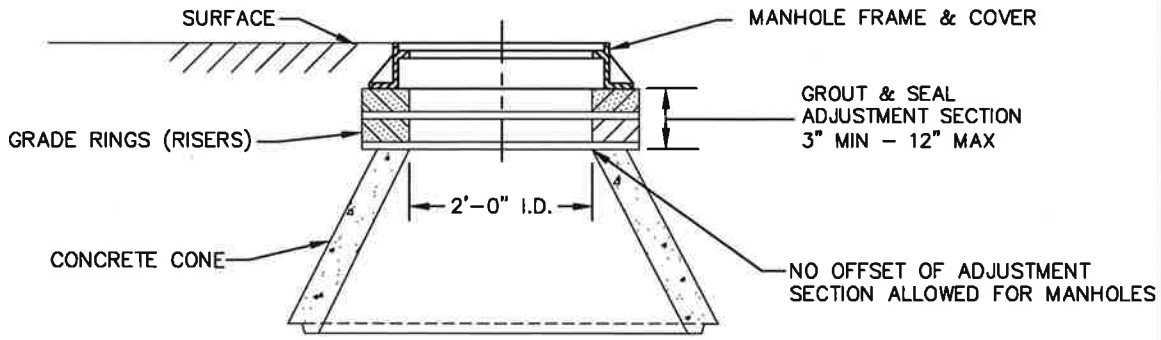

MANHOLE

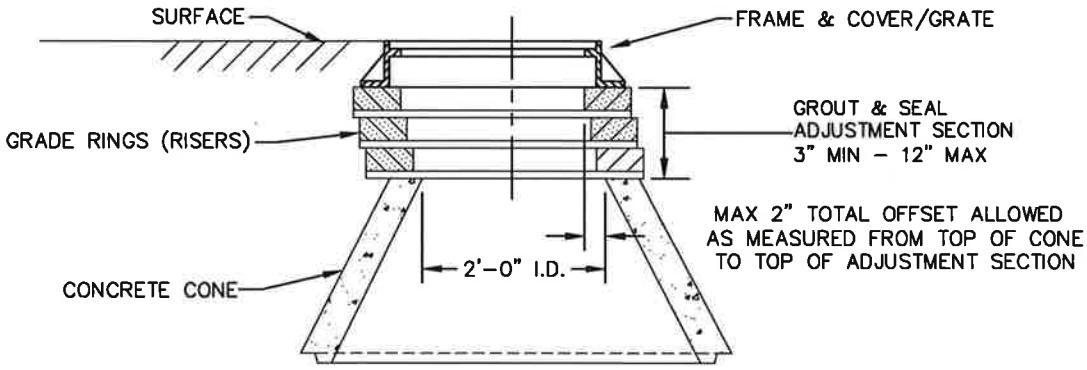

CATCH BASIN, INLET, DRYWELL

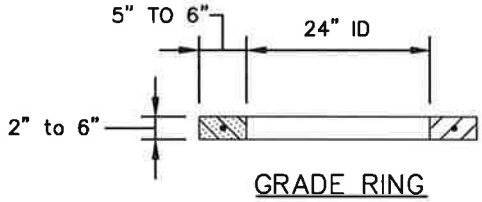

GRADE RING

NOTES:

1. ADJUSTMENT SECTION SHALL BE CONSTRUCTED WITH PRE–FABRICATED REINFORCED CONCRETE GRADE RINGS (RISERS) CONFORMING TO ASTM C478 AND SHALL BE GROUTED IN PLACE.
2. GRADE RINGS SHALL BE A CONTINUOUS LOOP OF REINFORCED CONCRETE AND SHALL BE FLAT. GRADE RINGS SHALL BE A UNIFORM DIMENSION THROUGHOUT ITS CROSS SECTION.
3. GRADE RINGS REINFORCEMENT SHALL BE A MINIMUM OF ONE FULL HOOP OF STEEL REINFORCING OF MINIMUM YIELD STRESS F_y = 40 KSI.
4. IN ADDITION TO THE GRADE RINGS, IF NECESSARY FOR PROPER FINAL ADJUSTMENT HEIGHT OF LESS THAN 2", WEDGES OF PRE–FABRICATED CERAMIC OR CONCRETE BRICK AS APPROVED BY THE ENGINEER MAY BE USED AND SHALL BE GROUTED IN PLACE.
5. ADJUSTMENT SECTION SHALL BE SEALED PER SECTION 7–05.

APPROVED BY	ADOPTED: 1/2017	ADJUSTMENT SECTION GRADE RINGS (RISERS)	
ENGINEERING OPERATIONS MANAGER KYLE TWOHIG	REVISED:		
CITY ENGINEER DANIEL ALBERT BULLER, P.E.	SUPERSEDES:	SPOKANE ENGINEERING SERVICES CITY OF SPOKANE, WASHINGTON	STANDARD PLAN No. B–123
	CHECKED BY: WRP		
	SCALE: NTS		
	REVISED BY: EWS		