TABLE OF CONTENTS

CITY OF SPOKANE STANDARD PLANS – SECTION D

B-101B = Revised Standard Plan
***W-108A = New Standard Plan
#A-1 = Renumbered Standard Plan

Back to Main TOC

Plan No.	Plan Title	Current Plan Date
D-101B	Concrete Curb Wall	4/12
D-102	Retaining Wall Steps	2/86
D-103	Rock Retaining Wall	5/07
D-104	Concrete Gravity Wall	4/13
D-105	Concrete Retaining Wall – Details	4/04
D-105A	Concrete Retaining Wall Joints – Modifications for Stone Facings	2/86
D-106	Rockery Retaining Wall	8/19

Back to Section D - TOC

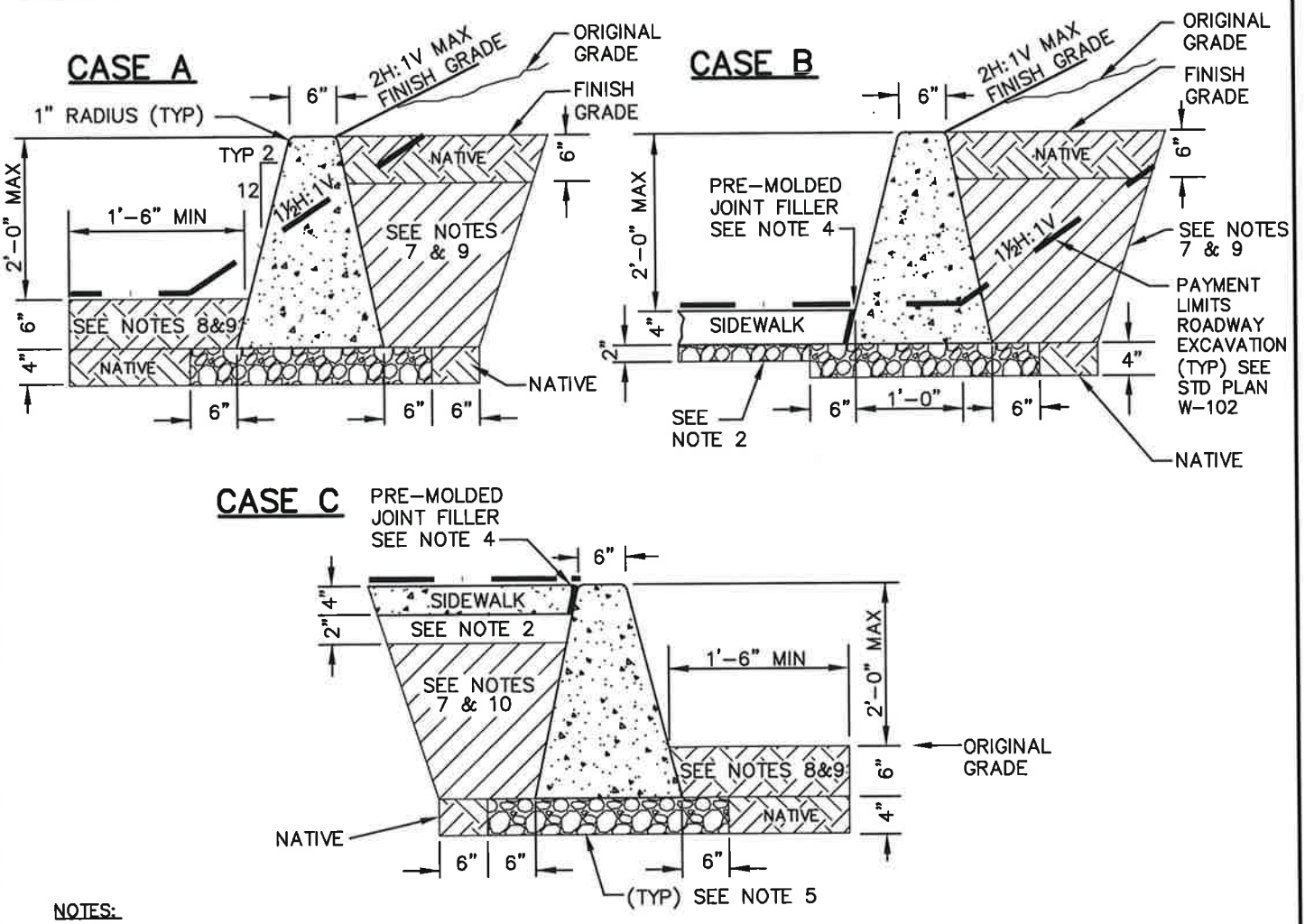

NOTES:

1. CONCRETE SHALL BE AIR-ENTRAINED, 6 SACK, COMMERCIAL CONCRETE IN ACCORDANCE W/ SEC 6-02.3(2)B. EXPOSED CURB WALL CONCRETE SHALL HAVE A CLASS 1 SURFACE FINISH PER SEC 6-02.3(14).
2. SEE STD PLAN F-102B FOR CSTC REQ'MTS UNDERNEATH SIDEWALKS.
3. SEE STD PLAN D-105 FOR RETAINING WALL JOINTS & DETAILS.
4. WALLS W/ ADJACENT SIDEWALKS SHALL REQUIRE A PREMOLDED JOINT FILLER PER SEC 9-04 PLACED BETWEEN THE ADJACENT SIDEWALK & CONCRETE WALL FACE.
5. RETAINING WALL FOUNDATIONS SHALL BE PREPARED PER SEC 2-09.3(3)C AND HAVE CSTC PER SEC 9-03.9(3) PLACED UNDERNEATH THE FOOTING AT THE SPECIFIED THICKNESS & COMPACTED TO 95% MAX DENSITY PER AASHTO T-180.
6. BACKFILL SHALL NOT BE PLACED UNTIL THE CONCRETE HAS ATTAINED 90% OF ITS DESIGN STRENGTH & CURED FOR AT LEAST 14-DAYS PER SEC 2-09.3(1)E.
7. GRAVEL BACKFILL BEHIND CURB WALLS SHALL COMPLY W/ SEC 9-03.12(2).
8. BACKFILL IN FRONT OF CURB WALLS MAY COME FROM INSITU SOILS THAT ARE APPROVED BY THE ENGINEER. WHEN INSITU SOILS ARE NOT ACCEPTABLE, AN APPROVED BORROW MAT'L MAY BE UTILIZED.
9. BACKFILL BEHIND CURB WALLS IN UNTRAVELED OR LANDSCAPED AREAS SHALL BE PLACED IN 6" MAX HORIZ LAYERS & COMPACTED TO 85% MAX DENSITY PER AASHTO T-180. BACKFILL IN FRONT OF CURB WALLS SHALL BE COMPACTED TO 92% MAX DENSITY.
10. BACKFILL THAT SUPPORTS SIDEWALK AREAS SHALL BE PLACED IN 6" MAX HORIZ LAYERS & COMPACTED TO 92% MAX DENSITY PER AASHTO T-180.
11. HANDRAIL OR FENCING INSERTS SHALL BE INCORPORATED INTO THE WALL DESIGN, AS REQ'D & PLACED FLUSH TO THE TOP OF WALL AT THE DESIGNED SPACING.
12. CURB WALL EXCAVATION BELOW THE ROADWAY EXCAVATION PAYMENT LIMITS IS INCIDENTAL.

APPROVED BY DIRECTOR, ENGINEERING SERVICES PERRY M. TAYLOR, P.E. PRINCIPAL ENGINEER, CONST. KENNEYH M. BROWN, P.E.	ADOPTED: 4/2004 REVISED: 4/2012 SUPERSEDES: 4/2004 CHECKED BY: SJS SCALE: NTS REVISED BY: LWK	CONCRETE CURB WALL ENGINEERING SERVICES CITY OF SPOKANE, WASHINGTON STANDARD PLAN No. D-101B

Back to Section D - TOC

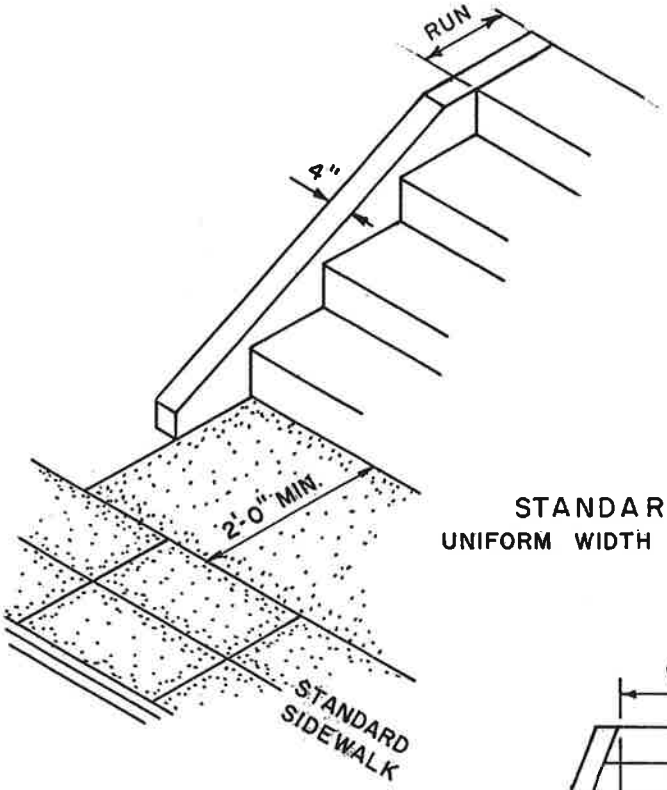

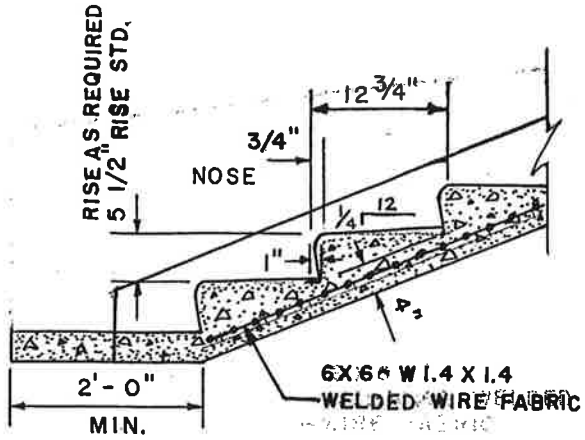

STANDARD STEPS

UNIFORM WIDTH – SIDE CURB AND WIRE FABRIC REQUIRED ON STEPS WITH 3 OR MORE RISERS.

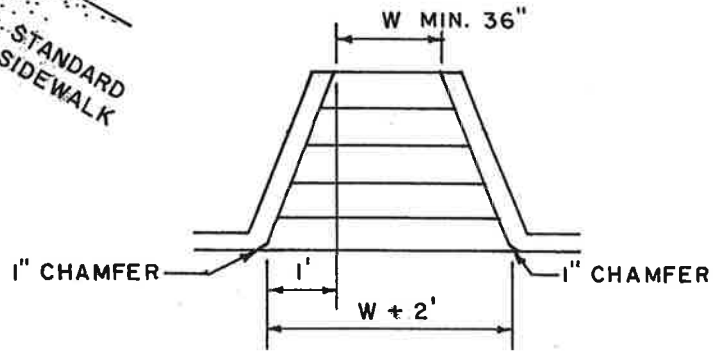

ALTERNATE FLARED STEP PLAN

(FOR USE WITH RETAINING WALL ONLY)

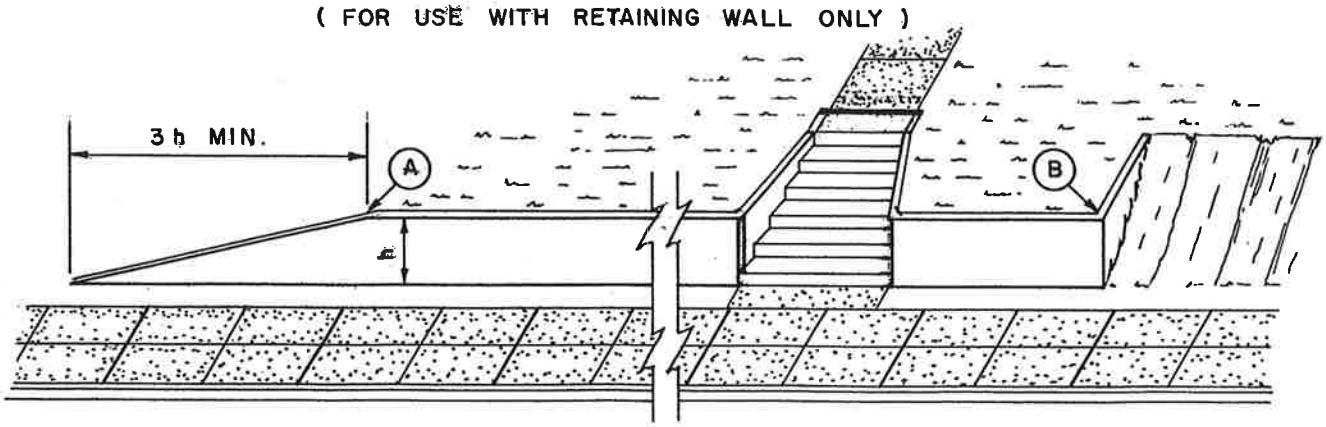

RETAINING WALL WITH FLARED STEPS

FROM (A) TO (B) - NO STEPPED CHANGE IN GRADE

APPROVED BY CITY ENGR. [signature] CH. DES. ENGR. [signature]	SCALE NONE ADOPTED 2-86 REVISED ------	**RETAINING WALL STEPS** DEPT. OF PUBLIC WORKS ENGR. DIVISION SPOKANE, WN.	STANDARD PLAN No. D-102

Back to Section D - TOC

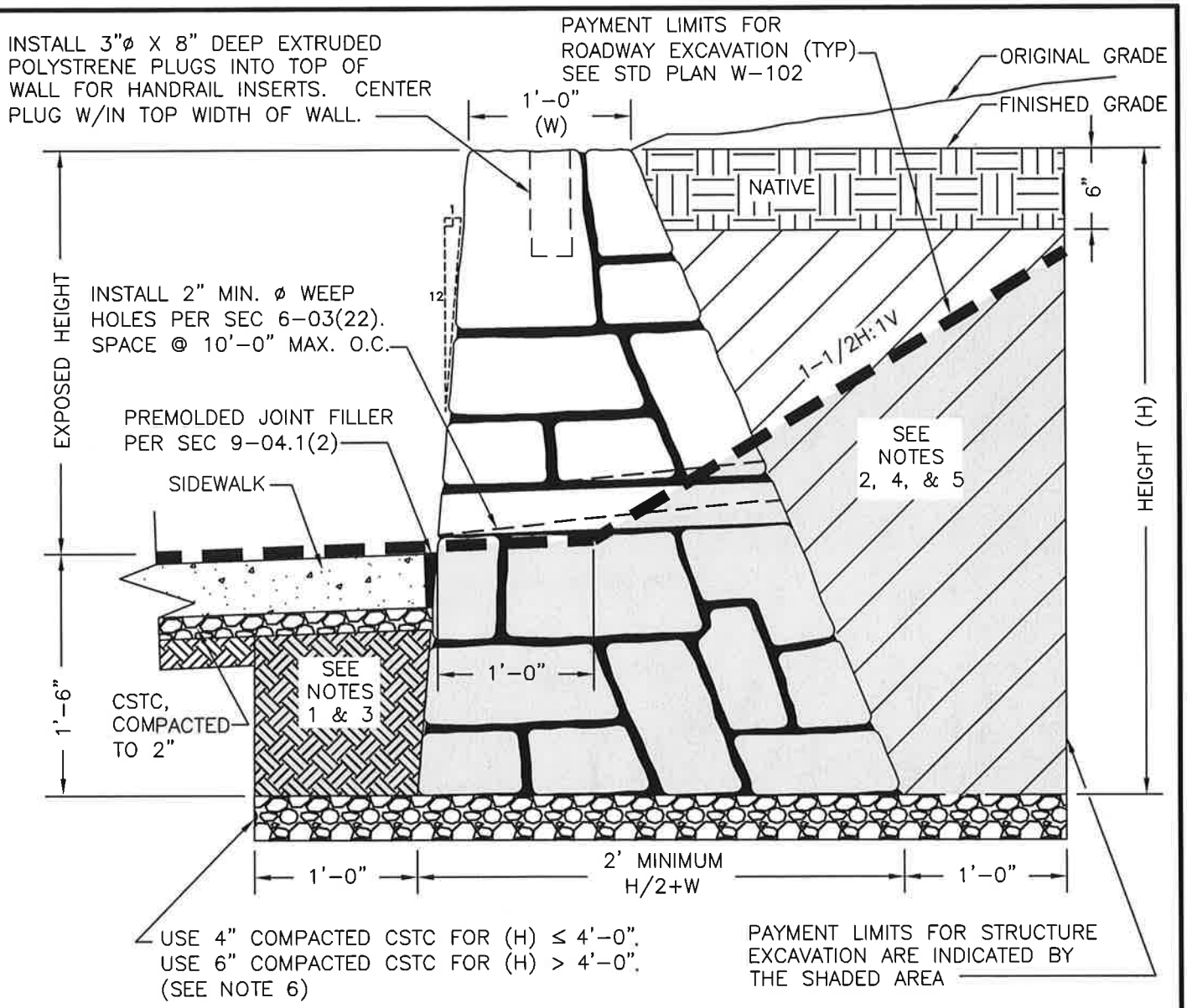

NOTES:

1. BACKFILL IN FRONT OF RETAINING WALLS MAY COME FROM INSITU SOILS THAT ARE APPROVED BY THE ENGINEER. WHEN INSITU SOILS ARE NOT ACCEPTABLE, AN APPROVED BORROW MAT'L MAY BE UTILIZED.

2. BACKFILL IN UNTRAVELED OR LANDSCAPED AREAS SHALL BE PLACED IN 6" MAX HORIZ LAYERS & COMPACTED TO 85% MAX DENSITY PER AASHTO T-180.

3. BACKFILL THAT SUPPORTS SIDEWALK AREAS SHALL BE PLACED IN 6" MAX HORIZ LAYERS & COMPACTED TO 92% MAX DENSITY PER AASHTO T-180.

4. GRAVEL BACKFILL BEHIND RETAINING WALLS SHALL COMPLY W/ SEC 9-03.12(2). BACKFILL W/IN 18-INCHES OF WEEP HOLES SHALL COMPLY W/ SECS 6-02.3(100) & 9-03.12(4).

5. GRAVEL BACKFILL FOR DRAINS SHALL BE PLACED IN 12" MAX HORIZ LAYERS & COMPACTED W/ A MIN OF 3-PASSES OF A VIBRATORY MANUAL COMPACTOR.

6. RETAINING WALL FOUNDATIONS SHALL BE PREPARED PER SEC 2-09.3(3)C AND HAVE CSTC PER SEC 9-03.9(3) PLACED UNDERNEATH THE FOOTING & COMPACTED TO 95% MAX DENSITY PER AASHTO T-180.

APPROVED BY DIRECTOR, ENGINEERING SERVICES — TOM L. ARNOLD, P.E. PRINCIPAL ENGINEER, DESIGN — GARY S. NELSON, P.E.	ADOPTED: 2/1986 REVISED: 05/2007 SUPERSEDES: 6/1993 CHECKED BY: JAG SCALE: NTS DWG/REV. BY: RDC	ROCK RETAINING WALL ENGINEERING SERVICES CITY OF SPOKANE, WASHINGTON STANDARD PLAN No. D-103

Back to Section D - TOC

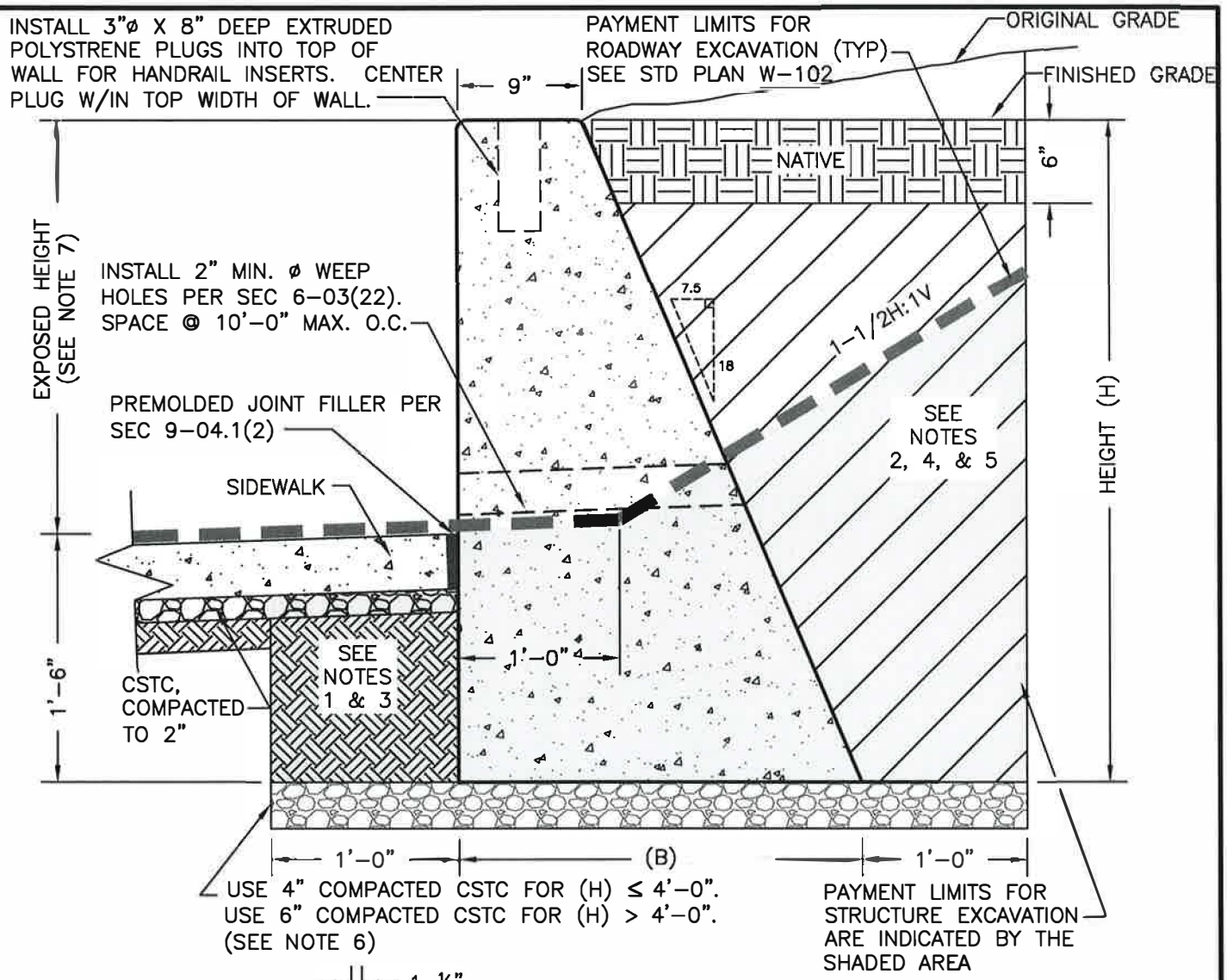

SEE D-105 FOR SPACING OF CONTRACTION & EXPANSION JOINTS

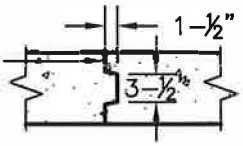

CONSTRUCTION JOINT

HEIGHT (H) = VARIABLE
BOTTOM (B) = 9" + .625(H)

NOTES:

1. BACKFILL IN FRONT OF RETAINING WALLS MAY COME FROM INSITU SOILS THAT ARE APPROVED BY THE ENGINEER. WHEN INSITU SOILS ARE NOT ACCEPTABLE, AN APPROVED BORROW MAT'L MAY BE UTILIZED.
2. BACKFILL IN UNTRAVELED OR LANDSCAPED AREAS SHALL BE PLACED IN 6" MAX HORIZ LAYERS & COMPACTED TO 85% MAX DENSITY PER AASHTO T-180.
3. BACKFILL THAT SUPPORTS SIDEWALK AREAS SHALL BE PLACED IN 6" MAX HORIZ LAYERS & COMPACTED TO 92% MAX DENSITY PER AASHTO T-180.
4. GRAVEL BACKFILL BEHIND RETAINING WALLS SHALL COMPLY W/ SEC 9-03.12(2). BACKFILL W/IN 18-INCHES OF WEEP HOLES SHALL COMPLY W/ SECS 6-02.3(100) & 9-03.12(4).
5. GRAVEL BACKFILL FOR DRAINS SHALL BE PLACED IN 12" MAX HORIZ LAYERS & COMPACTED W/ A MIN OF 3-PASSES OF A VIBRATORY MANUAL COMPACTOR.
6. RETAINING WALL FOUNDATIONS SHALL BE PREPARED PER SEC 2-09.3(3)C AND HAVE CSTC PER SEC 9-03.9(3) PLACED UNDERNEATH THE FOOTING & COMPACTED TO 95% MAX DENSITY PER AASHTO T-180.
7. FOR EXPOSED HEIGHT ≤ 2'-0", USE CONCRETE CURB WALL PER STD PLAN D-101B.
8. CONCRETE SHALL BE AIR-ENTRAINED, 6 SACK, COMMERCIAL CONCRETE IN ACCORDANCE W/ SEC 6-02.3(2)B.

APPROVED BY DIRECTOR, ENGINEERING SERVICES PERRY M. TAYLOR, P.E. PRINCIPAL ENGINEER, CONST. KENNETH M. BROWN, P.E.	ADOPTED: 2/1986 REVISED: 04/2013 SUPERSEDES: 05/2007 CHECKED BY: SJS SCALE: NTS REVISED BY: LWK	CONCRETE GRAVITY WALL ENGINEERING SERVICES CITY OF SPOKANE, WASHINGTON STANDARD PLAN No. D-104

Back to Section D - TOC

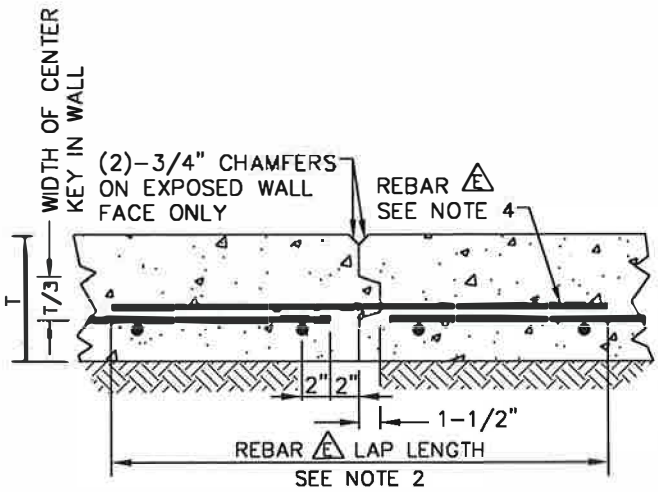

CONSTRUCTION JOINT – CONTACT
PLAN

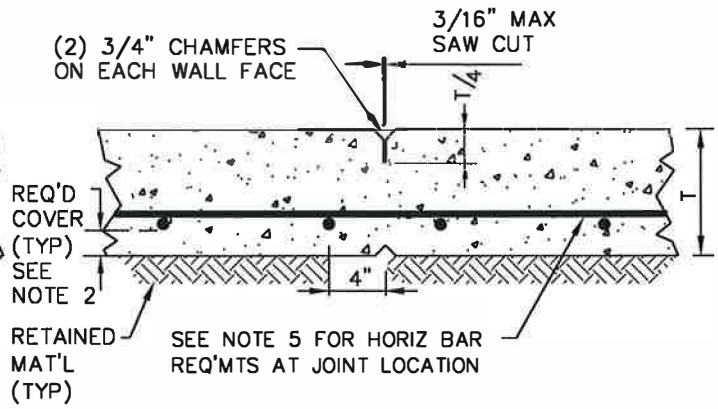

CONTRACTION JOINT – CONTROL
PLAN

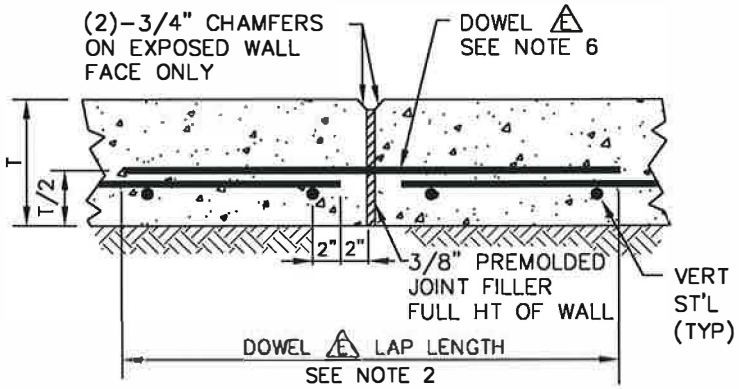

EXPANSION JOINT – ISOLATION
PLAN

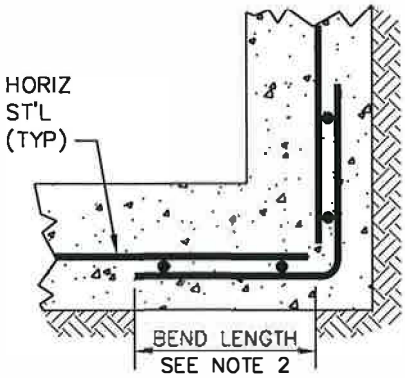

CORNER STEEL DETAIL
PLAN

NOTES:

1. PLACE 3/4" CHAMFER ON ALL EXPOSED CORNERS & SLOPE TOP OF WALL TOWARDS EXPOSED FACE FOR DRAINAGE.
2. REINFORCING ST'L, BAR ANCHORAGE, COVER, & BEND & LAP LENGTHS, SHALL BE PER LATEST EDITION OF THE A.C.I. CONCRETE CODE & THE DESIGN REQ'MTS AS SPECIFIED BY A LICENSED ENGINEER.
3. EXPOSED RETAINING WALL CONCRETE SHALL HAVE A CLASS 1 SURFACE FINISH PER SEC 6-02.3(14).
4. CONSTRUCTION JOINT: REBAR ACROSS JOINT SHALL BE EPOXY COATED & MATCH SIZE, LOCATION, & LAP LENGTH PER DESIGN REQ'MTS. ALTERNATE TO DETAIL: EXTEND EPOXY COATED HORIZ REBAR FROM ONE WALL SEGMENT INTO THE OTHER FOR A DISTANCE EQUAL TO THE REQ'D LAP LENGTH.
5. CONTRACTION JOINT: CUT 2ND HORIZ BAR DOWN FROM TOP-OF-WALL & ALTERNATE HORIZ BARS WHILE PROCEEDING DOWNWARDS. TOP BAR & ALTERNATE UN-CUT BARS SHALL EXTEND ACROSS JOINT. CONTRACTION JOINTS SHALL BE SPACED AT 20-FT O.C.
6. EXPANSION JOINT: DOWELS SHALL BE EPOXY COATED, ROUND, & SMOOTH. THE TOP DOWEL SHALL BE A MIN OF (T/2) DOWN FROM TOP OF WALL. ONE DOWEL END SHALL BE SAW-CUT TO PREVENT BURRS THAT WOULD INHIBIT MOVEMENT DURING EXPANSION. THE SAW-CUT DOWEL END SHALL BE LUBRICATED UP TO THE EXPANSION JOINT W/ A PARTING COMPOUND TO MINIMIZE CONCRETE BONDING. EXPANSION JOINTS SHALL BE LOCATED AT EVERY 4TH JOINT (80-FT O.C.) & ARE NOT REQ'D ON CONTINUOUS WALL LENGTHS < 100-FT.

Ⓔ DENOTES EPOXY COATED REBAR & DOWELS.

APPROVED BY DIRECTOR, ENGINEERING SERVICES TOM L. ARNOLD, P.E. PRINCIPAL ENGINEER, DESIGN KEN M. BROWN, P.E.	ADOPTED: 2/86 REVISED: 4/2004 SUPERSEDES: SCALE: NTS DWG/REV. BY: MDH/TSS	CONCRETE RETAINING WALL DETAILS SPOKANE ENGINEERING SERVICES CITY OF SPOKANE, WASHINGTON STANDARD PLAN No. D-105

Back to Section D - TOC

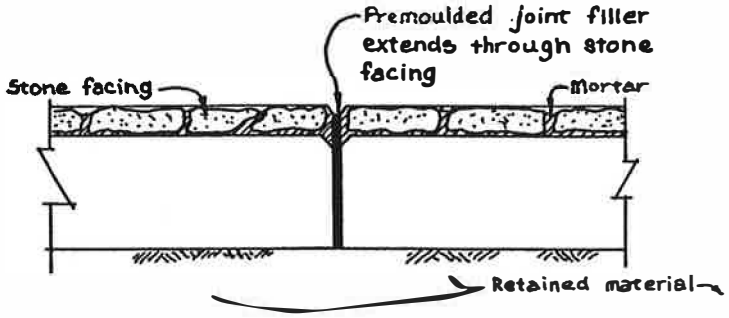

EXPANSION JOINT
PLAN VIEW

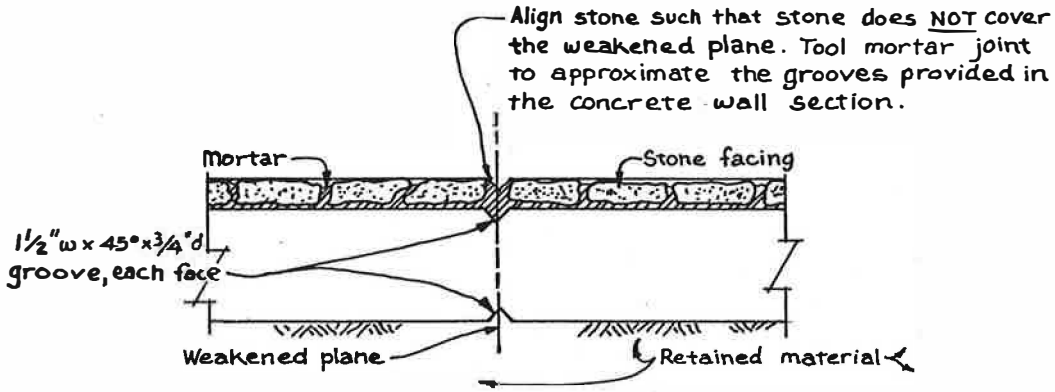

CONTROL (CONTRACTION) JOINT
PLAN VIEW

NOTE: All details on drawing D-105 apply.

APPROVED	SCALE ... NONE	CONCRETE RETAINING WALL JOINTS; MODIFICATIONS FOR STONE FACINGS	
CITY ENGINEER ...	ADOPTED ... 2-86		
CHIEF DESIGN ENGINEER ...	REVISED ...	DEPT. OF PUBLIC WORKS	STANDARD PLAN
	SUPERSEDES ...	ENGR. DIVISION SPOKANE, WA.	Nº D-105 a

Back to Section D - TOC

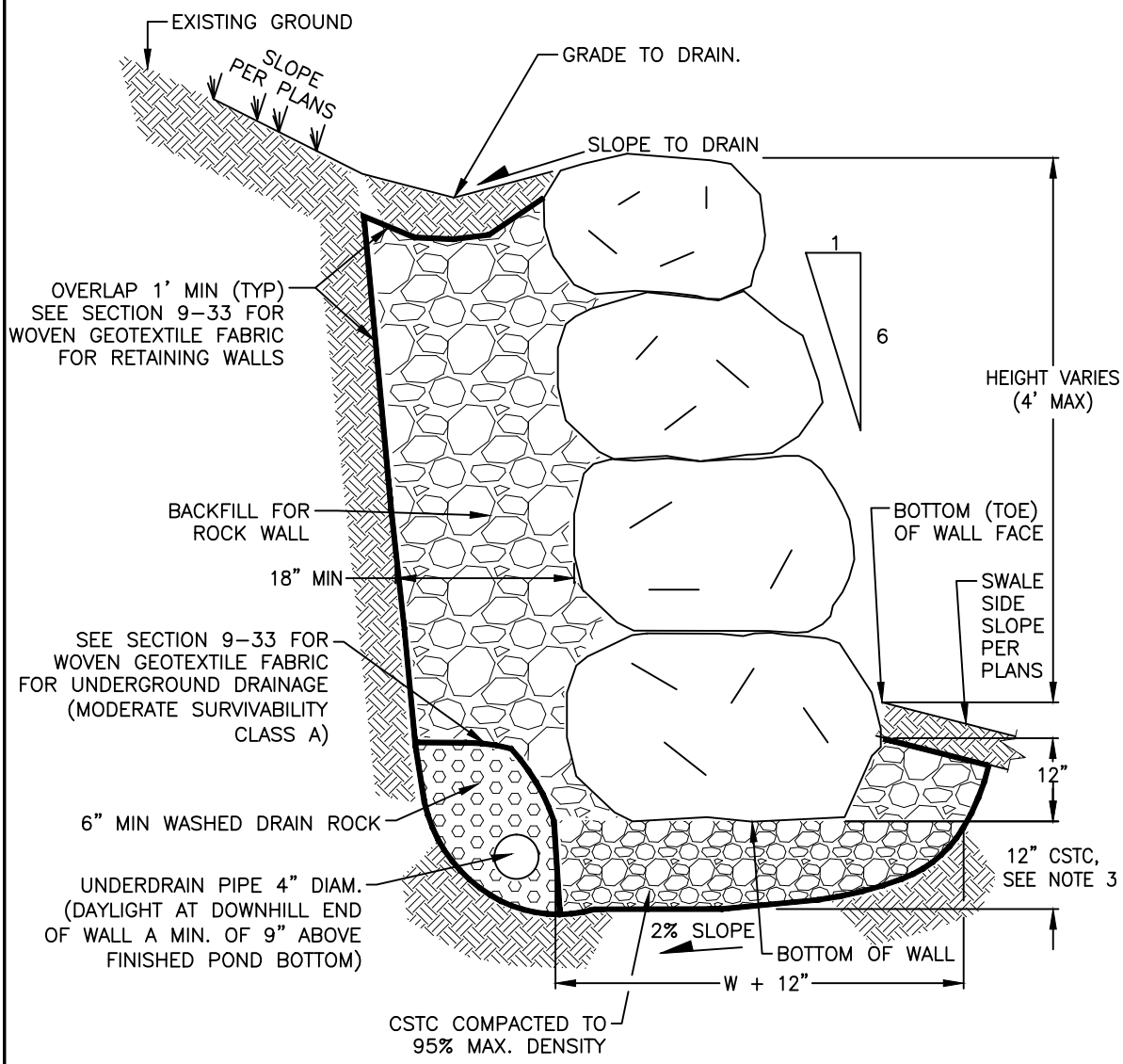

ROCK DIMENSIONS		
ROCKERY HEIGHT (FT)	MIN ROCK SIZE (BASE)	MIN ROCK SIZE (TOP)
2	2-MAN	2-MAN
4	3-MAN	2-MAN
6	4-MAN	2-MAN

ROCKERY WALL NOTES:

1. REFERENCE WSDOT STANDARD SPECIFICATIONS 2016 M 41-10 SECTION 8-24 FOR CONSTRUCTION METHODS & ROCK PLACEMENT.

2. ROCK SIZING PER WSDOT STANDARD SPECIFICATION 2016 M 41-10 SECTION 9-13.7.

3. IF SOLID ROCK IS REVEALED DURING EXCAVATION OPERATIONS FOR THE ROCKERY RETAINING WALL SUBGRADE THE 12" OF CSTC BELOW THE BOTTOM ROCK MAY BE ELIMINATED. UNDERDRAIN PIPING MAY ALSO BE ADJUSTED TO FACILITATE THIS CHANGE. HOWEVER, IT MUST STILL PROVIDE DRAINAGE TO THE DOWNHILL SIDE OF THE WALL.

4. ALL OPENINGS SHALL BE CHINKED WITH GRAVEL BACKFILL.

5. ROCKERY WALLS SHALL HAVE MAXIMUM HEIGHT OF 4FT FROM BOTTOM OF WALL FACE TO TOP OF WALL.

6. TAPER WALL ENDS TO EXISTING GRADE OVER A DISTANCE OF 8FT±.

APPROVED BY

ENGINEERING SERVICES DIRECTOR — KYLE TWOHIG

CITY ENGINEER — DAN BULLER, P.E.

ADOPTED: _____
REVISED: 04/2019
SUPERSEDES: 03/2018
CHECKED BY: X
SCALE: NTS
REVISED BY: MLD

ROCKERY RETAINING WALL

SPOKANE

ENGINEERING SERVICES
CITY OF SPOKANE, WASHINGTON

STANDARD PLAN No.
D-106