# TABLE OF CONTENTS

## CITY OF SPOKANE STANDARD PLANS – SECTION Z

B-101B = Revised Standard Plan
***W-108A = New Standard Plan
#A-1 = Renumbered Standard Plan

Back to Main TOC


| Plan No. | Plan Title | Current Plan Date |
|---|---|---|
| Z-101 | Manhole –48" | 10/19 |
| Z-102 | Manhole –54" & 60" | 10/19 |
| Z-103 | Manhole – 72" | 10/19 |
| Z-104 | Manhole – 96" | 10/19 |
| Z-105 | Manhole –48", Shallow | 10/19 |
| Z-106 | Manhole –72", Shallow | 10/19 |
| Z-106A | Manhole –96", Shallow | 10/19 |
| Z-107 | Type V Manhole | 10/19 |
| Z-108 | Manhole – Reducing Slab, Reinforcement Details | 4/04 |
| Z-109 | Manhole Step Details | 4/12 |
| Z-110 | Manhole – Interior Channel Drop | 5/07 |
| Z-111 | Manhole – Interior D.I.P. Drop | 10/19 |
| Z-112 | Manhole – Exterior D.I.P. Drop | 10/19 |
| Z-113 | Manhole – Pipe Invert Elevations | 4/04 |
| Z-114 | Sewer Cleanout | 10/19 |
| Z-115 | Side Sewer – Riser Connection | 2/18 |
| Z-116 | Side Sewer – Typical Connection | 1/17 |
| ***Z-117 | Manhole Channel Detail | 2/19 |
| #Z-118 | CB, DW & MH Base Slab and Foundation Details *(previously B-122)* | 12/98 |

Back to Section Z - TOC

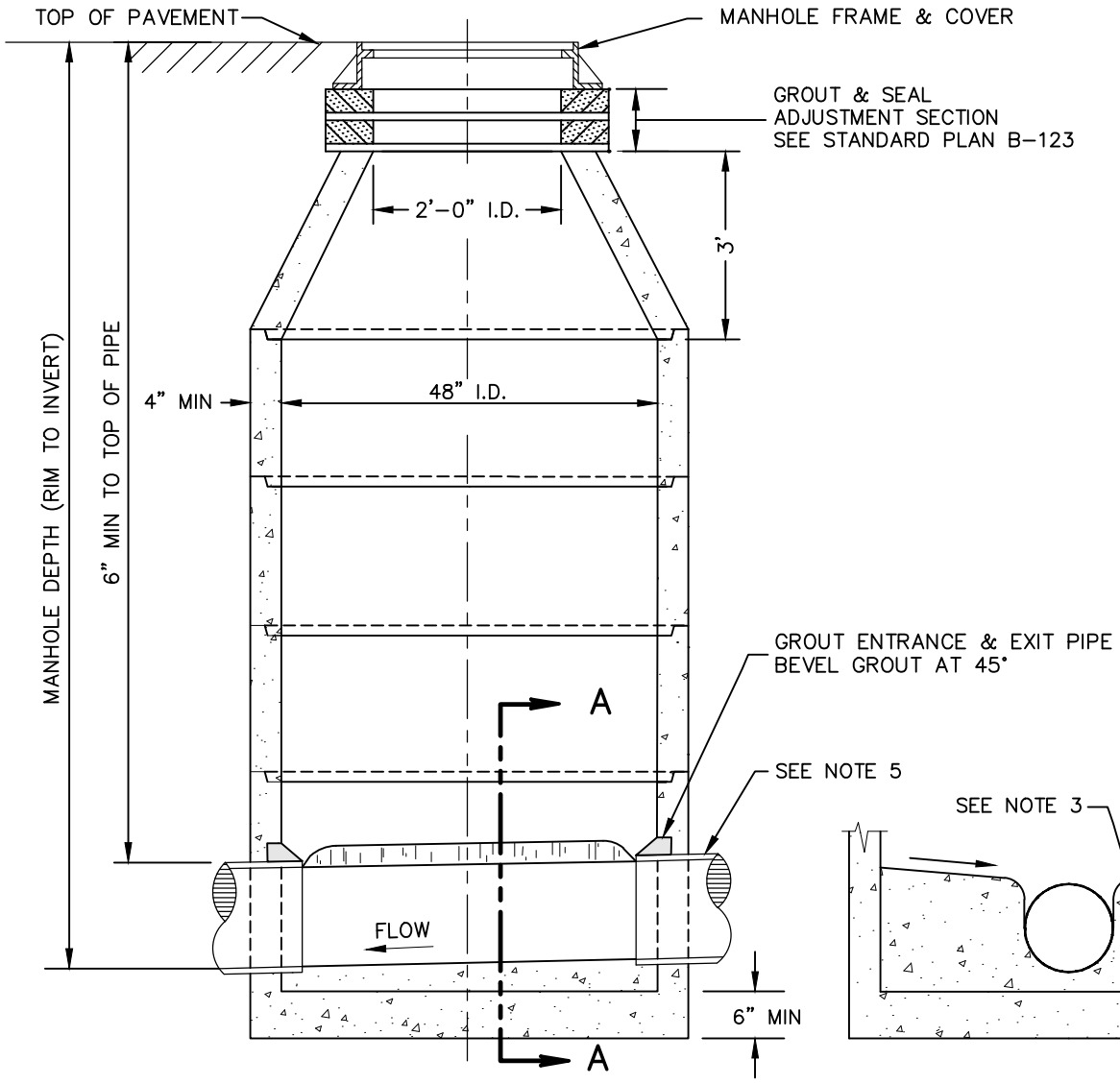


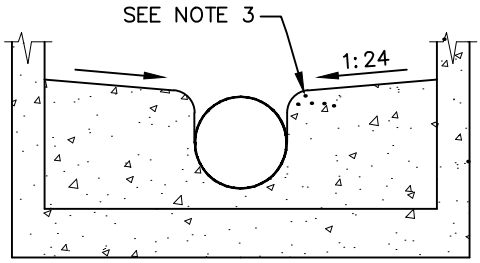


SECTION A-A

NOTES:

1. SEE STANDARD PLANS A-12/A-13 FOR MANHOLE FRAME & COVER, AND Z-118 FOR BASE & FOUNDATION.
2. MANHOLE STEPS ARE REQUIRED, SEE Z-109.
3. FORM SHELF & SMOOTH CONTINUOUS CHANNEL WITH COMMERCIAL GRADE CONCRETE.
4. MANHOLES EXCEEDING A 20 FT DEPTH SHALL HAVE BARREL SECTIONS WITH MINIMUM 54" DIAMETER, SEE Z-102.
5. MAX PIPE DIA = 24". ANGULAR RUNS EXCEEDING 45° OR ADDITIONAL JUNCTIONS MAY REQUIRE LARGER MANHOLE. DESIGN VERIFICATION IS REQUIRED.
6. SEE STANDARD PLAN A-8 FOR ADJUSTMENT SECTION REQUIREMENTS.

| | | |
|---|---|---|
| APPROVED BY<br>ENGINEERING SERVICES DIRECTOR — KYLE TWOHIG<br>CITY ENGINEER — DAN BULLER, P.E. | ADOPTED: _____<br>REVISED: 10/2019<br>SUPERSEDES: 04/2018<br>CHECKED BY: SJS<br>SCALE: NTS<br>REVISED BY: LWK/MLD | MANHOLE – 48"<br>SPOKANE<br>ENGINEERING SERVICES<br>CITY OF SPOKANE, WASHINGTON<br>STANDARD PLAN No. Z-101 |

Back to Section Z - TOC

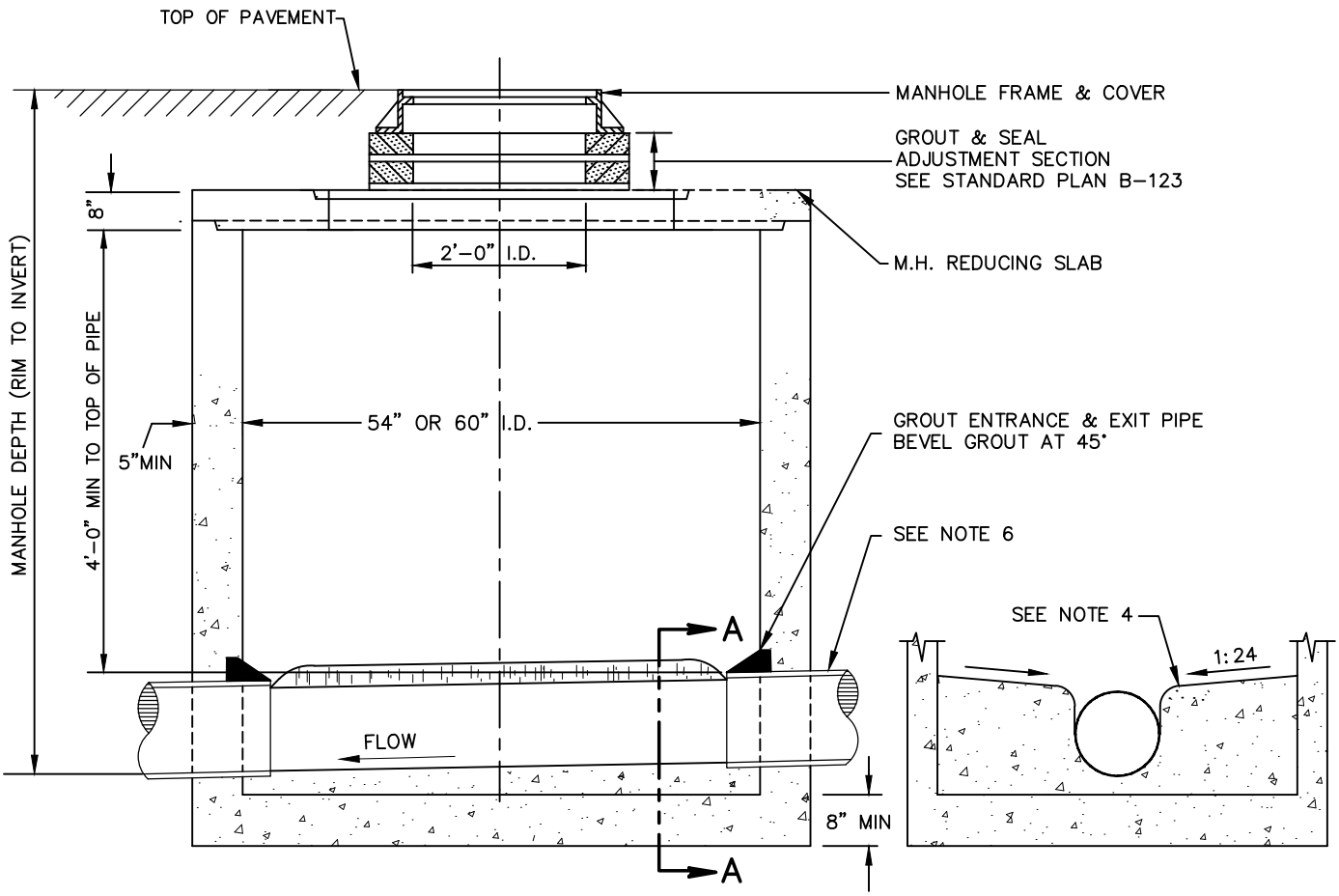


SECTION A-A

NOTES:

1. SEE STANDARD PLANS A-12/A-13 FOR MANHOLE FRAME & COVER, AND Z-118 FOR BASE & FOUNDATION.
2. MANHOLE STEPS ARE REQUIRED, SEE Z-109.
3. FORM SHELF & SMOOTH CONTINUOUS CHANNEL WITH COMMERCIAL GRADE CONCRETE.
4. REDUCING SLAB SHALL BE INSTALLED WITH A 24" OPENING CENTERED ON THE SLAB.
5. MAX PIPE DIA. = 30" FOR 54" MANHOLE AND 36" FOR 60" MANHOLE. ANGULAR RUNS EXCEEDING 45° OR ADDITIONAL JUNCTIONS MAY REQUIRE LARGER MANHOLE. DESIGN VERIFICATION IS REQUIRED.
6. SEE STANDARD PLAN A-8 FOR ADJUSTMENT SECTION REQUIREMENTS.

| | | |
|---|---|---|
| APPROVED BY<br>ENGINEERING SERVICES DIRECTOR KYLE TWOHIG<br>CITY ENGINEER DAN BULLER, P.E. | ADOPTED: _____<br>REVISED: 10/2019<br>SUPERSEDES: 04/2018<br>CHECKED BY: SJS<br>SCALE: NTS<br>REVISED BY: LWK/MLD | MANHOLE – 54" & 60"<br>SPOKANE<br>ENGINEERING SERVICES<br>CITY OF SPOKANE, WASHINGTON<br>STANDARD PLAN No. Z-102 |

Back to Section Z - TOC

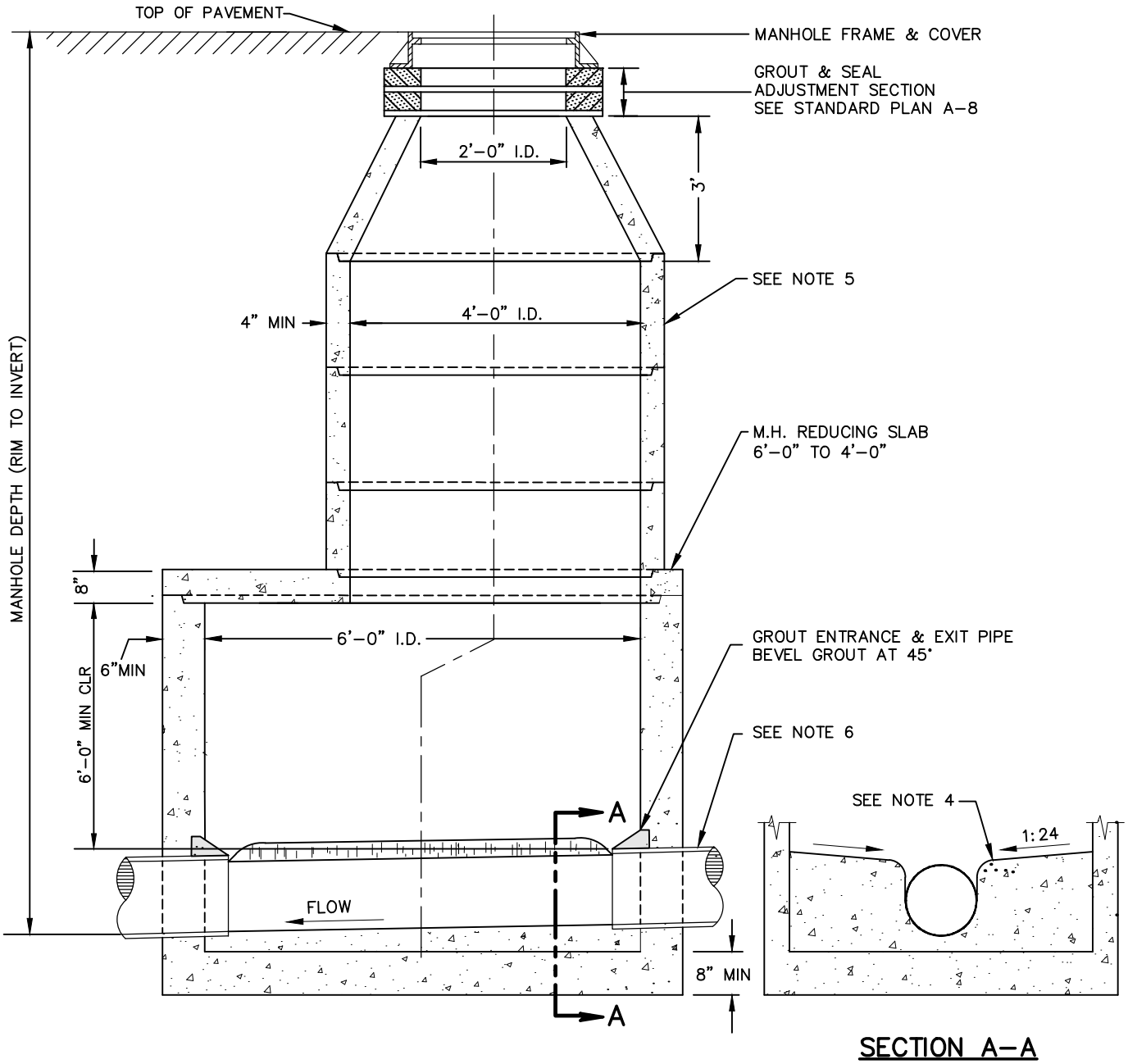


SECTION A-A

NOTES:

1. SEE STANDARD PLANS A-12/A-13 FOR MANHOLE FRAME & COVER, AND Z-118 FOR BASE & FOUNDATION.
2. MANHOLE STEPS ARE REQUIRED, SEE Z-109.
3. ACCESS HOLE TO BE CENTERED OVER CHANNEL.
4. FORM SHELF & SMOOTH CONTINUOUS CHANNEL WITH COMMERCIAL GRADE CONCRETE.
5. MANHOLES EXCEEDING A 20 FT DEPTH SHALL HAVE BARREL SECTIONS 54" I.D. OR GREATER IN WHICH CASE A BARREL DIA X 24" REDUCING SLAB SHALL BE USED IN PLACE OF THE CONE, 24" OPENING CENTERED ON SLAB.
6. MAX PIPE DIA. = 48" ANGULAR RUNS EXCEEDING 45° OR ADDITIONAL JUNCTIONS MAY REQUIRE LARGER MANHOLE. DESIGN VERIFICATION IS REQUIRED.
7. SEE STANDARD PLAN A-8 FOR ADJUSTMENT SECTION REQUIREMENTS.

| | | |
|---|---|---|
| APPROVED BY<br>ENGINEERING SERVICES DIRECTOR — KYLE TWOHIG<br>CITY ENGINEER — DAN BULLER, P.E. | ADOPTED: _____<br>REVISED: 10/219<br>SUPERSEDES: 04/2018<br>CHECKED BY: SJS<br>SCALE: NTS<br>REVISED BY: LWK/MLD | MANHOLE – 72"<br>SPOKANE<br>ENGINEERING SERVICES<br>CITY OF SPOKANE, WASHINGTON<br>STANDARD PLAN No. Z-103 |

Back to Section Z - TOC

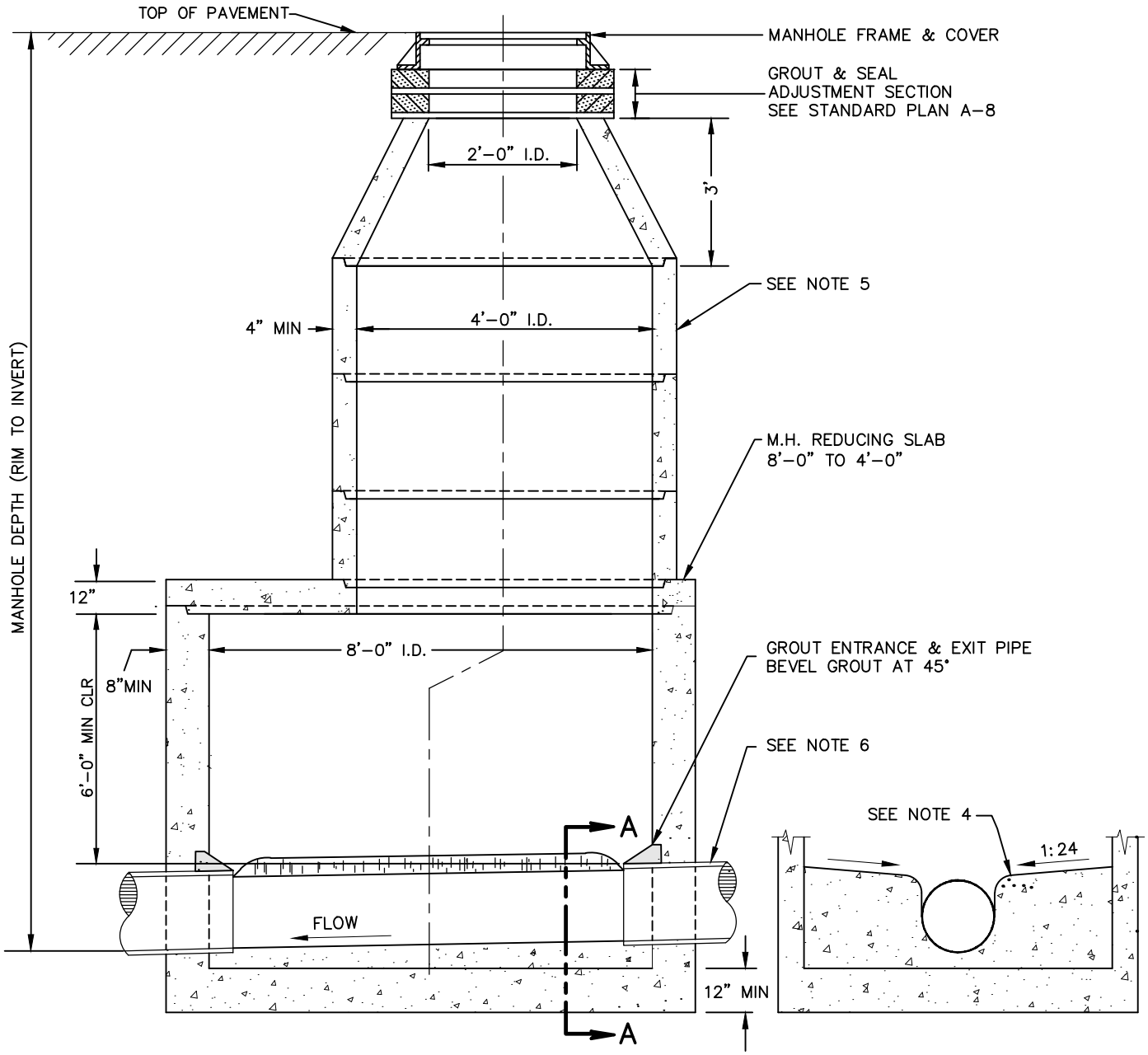


SECTION A-A

NOTES:

1. SEE STD PLANS A-12/A-13 FOR MANHOLE FRAME & COVER, AND Z-118 FOR BASE & FOUNDATION.
2. MANHOLE STEPS ARE REQUIRED, SEE Z-109.
3. ACCESS HOLE TO BE CENTERED OVER CHANNEL.
4. FORM SHELF & SMOOTH CONTINUOUS CHANNEL WITH COMMERCIAL GRADE CONCRETE.
5. MANHOLES EXCEEDING A 20 FT DEPTH SHALL HAVE BARREL SECTIONS 54" I.D. OR GREATER.
6. MAX PIPE DIA. = 72" ANGULAR RUNS EXCEEDING 45° OR ADDITIONAL JUNCTIONS MAY REQUIRE LARGER MANHOLE. DESIGN VERIFICATION IS REQUIRED.
7. SEE STANDARD PLAN A-8 FOR ADJUSTMENT SECTION REQUIREMENTS.

| | | |
|---|---|---|
| APPROVED BY<br>ENGINEERING SERVICES DIRECTOR — KYLE TWOHIG<br>CITY ENGINEER — DAN BULLER, P.E. | ADOPTED: _____<br>REVISED: 10/2019<br>SUPERSEDES: 04/2018<br>CHECKED BY: SJS<br>SCALE: NTS<br>REVISED BY: LWK/MLD | MANHOLE – 96"<br>SPOKANE<br>ENGINEERING SERVICES<br>CITY OF SPOKANE, WASHINGTON<br>STANDARD PLAN No. Z-104 |

Back to Section Z - TOC

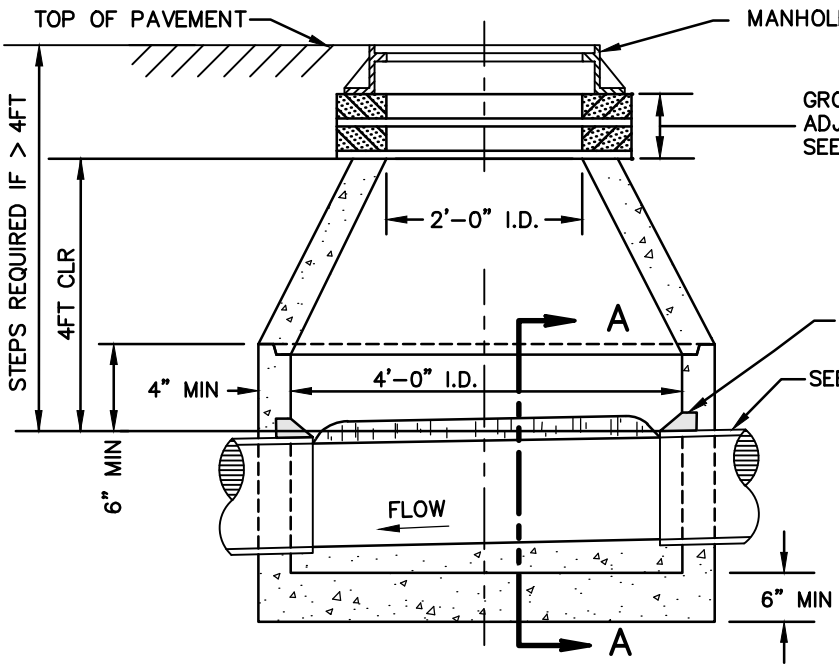


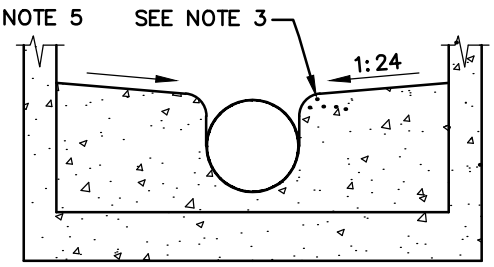


SECTION A-A

NOTES:

1. SEE STANDARD PLANS A-12/A-13 FOR MANHOLE FRAME & COVER, AND Z-118 FOR BASE & FOUNDATION.
2. SEE Z-109 FOR MANHOLE STEP DETAILS IF REQUIRED.
3. FORM SHELF & SMOOTH CONTINUOUS CHANNEL WITH COMMERCIAL GRADE CONCRETE.
4. IN GENERAL, SHALLOW MANHOLES ARE NOT ALLOWED. THIS DETAIL MAY BE ALLOWED WITH PRIOR PERMISSION OF THE SEWER DEPARTMENT ENGINEER WHERE SUFFICIENT VERTICAL CLEARANCE DOES NOT EXIST TO CONSTRUCT THE MANHOLE SHOWN ON Z-101. THIS DETAIL WILL NOT BE PERMITTED IN NEW INSTALLATIONS.
5. IN EXTREME SITUATIONS AND WITH APPROVAL OF THE SEWER DEPARTMENT ENGINEER, THE PIPE MAY BE LOCATED IN THE CONE AND THE BASE SLAB POURED IN PLACE.
6. SEE STANDARD PLAN A-8 FOR ADJUSTMENT SECTION REQUIREMENTS.

| | | |
|---|---|---|
| APPROVED BY<br>ENGINEERING SERVICES DIRECTOR KYLE TWOHIG<br>CITY ENGINEER DAN BULLER, P.E. | ADOPTED: _____<br>REVISED: 10/2019<br>SUPERSEDES: 04/2018<br>CHECKED BY: SJS<br>SCALE: NTS<br>REVISED BY: LWK/MLD | MANHOLE – 48" SHALLOW<br>SPOKANE<br>ENGINEERING SERVICES<br>CITY OF SPOKANE, WASHINGTON<br>STANDARD PLAN No. Z-105 |

Back to Section Z - TOC

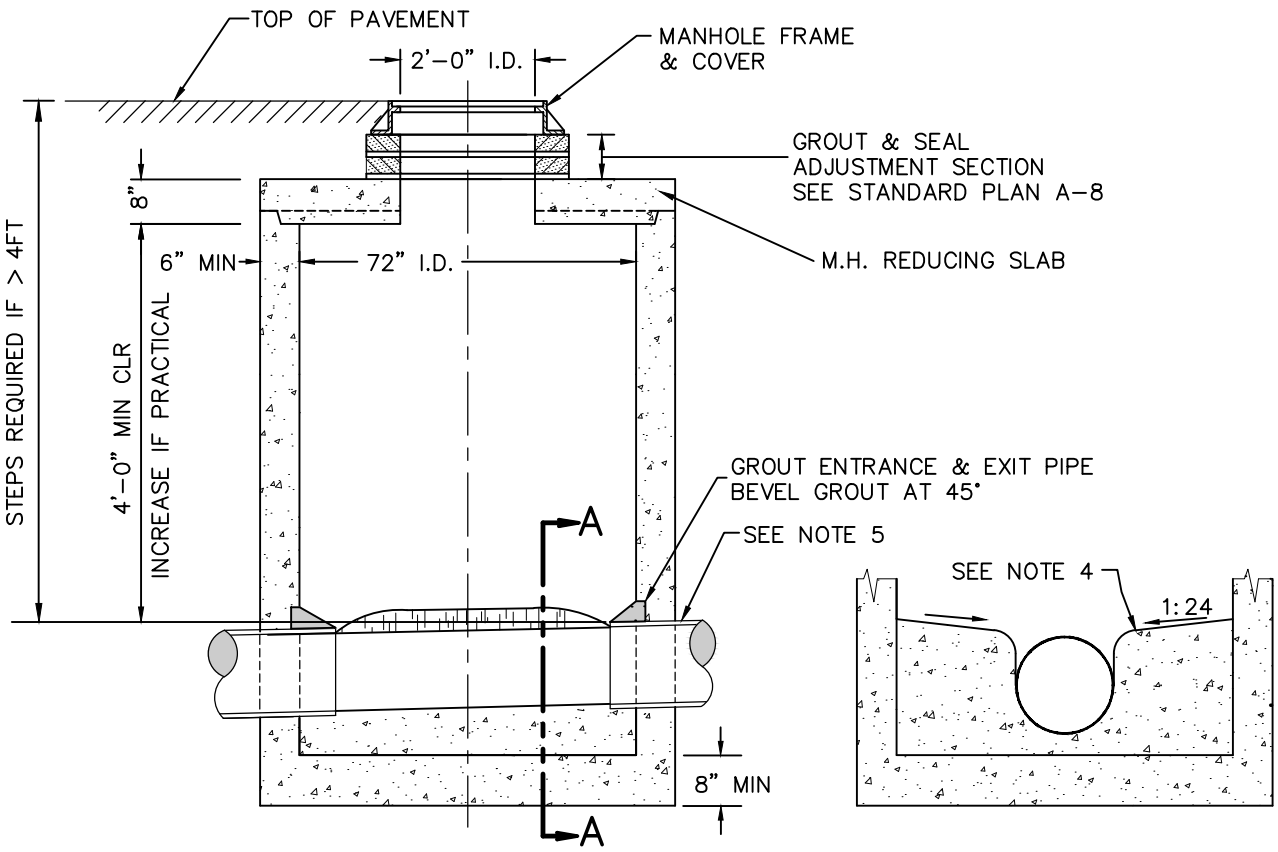


SECTION A-A

NOTES:

1. SEE STANDARD PLANS A-12/A-13 FOR FRAME & COVER, AND Z-118 FOR BASE & FOUNDATION.
2. SEE Z-109 FOR MANHOLE STEP DETAILS IF REQUIRED.
3. REDUCING SLAB SHALL BE INSTALLED WITH 24" OPENING CENTERED ON THE SLAB.
4. FORM SHELF & SMOOTH CONTINUOUS CHANNEL WITH COMMERCIAL GRADE CONCRETE.
5. MAX PIPE DIA. = 48". ANGULAR RUNS EXCEEDING 45° OR ADDITIONAL JUNCTIONS MAY REQUIRE LARGER MANHOLE. DESIGN VERIFICATION IS REQUIRED.
6. SEE STANDARD PLAN A-8 FOR ADJUSTMENT SECTION REQUIREMENTS.

| | | |
|---|---|---|
| APPROVED BY<br>ENGINEERING SERVICES DIRECTOR KYLE TWOHIG<br>CITY ENGINEER DAN BULLER, P.E. | ADOPTED: _____<br>REVISED: 10/2019<br>SUPERSEDES: 04/2018<br>CHECKED BY: SJS<br>SCALE: NTS<br>REVISED BY: LWK/MLD | MANHOLE – 72" SHALLOW<br>SPOKANE<br>ENGINEERING SERVICES<br>CITY OF SPOKANE, WASHINGTON<br>STANDARD PLAN No. Z-106 |

Back to Section Z - TOC

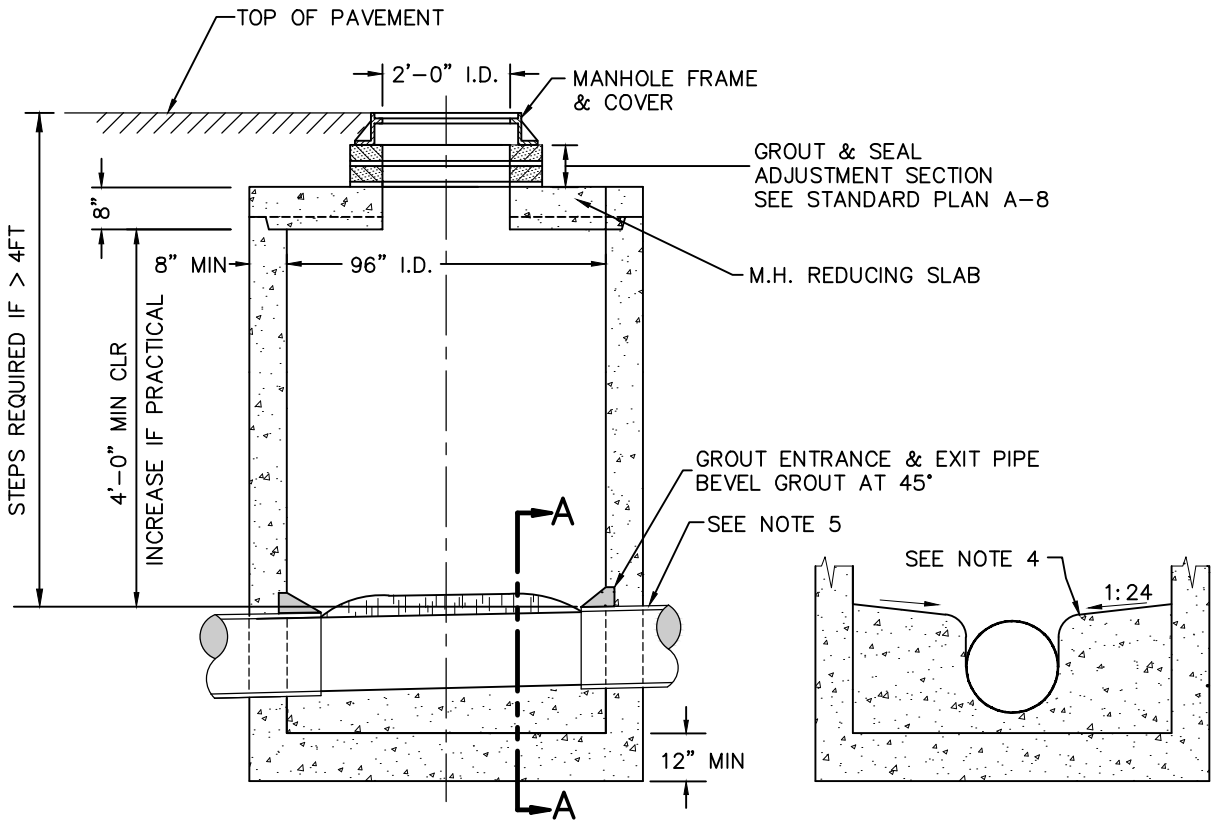


SECTION A-A

NOTES:

1. SEE STANDARD PLANS A-12/A-13 FOR FRAME & COVER, AND Z-118 FOR BASE & FOUNDATION.
2. SEE Z-109 FOR MANHOLE STEP DETAILS IF REQUIRED.
3. REDUCING SLAB SHALL BE INSTALLED WITH 24" OPENING CENTERED ON THE SLAB.
4. FORM SHELF & SMOOTH CONTINUOUS CHANNEL WITH COMMERCIAL GRADE CONCRETE.
5. MAX PIPE DIA. = 72". ANGULAR RUNS EXCEEDING 45° OR ADDITIONAL JUNCTIONS MAY REQUIRE LARGER MANHOLE. DESIGN VERIFICATION IS REQUIRED.
6. SEE STANDARD PLAN A-8 FOR ADJUSTMENT SECTION REQUIREMENTS.

| | | |
|---|---|---|
| APPROVED BY<br>ENGINEERING SERVICES DIRECTOR KYLE TWOHIG<br>CITY ENGINEER DAN BULLER, P.E. | ADOPTED: _____<br>REVISED: 10/2019<br>SUPERSEDES: 04/2018<br>CHECKED BY: SJS<br>SCALE: NTS<br>REVISED BY: LWK/MLD | MANHOLE – 96" SHALLOW<br>SPOKANE<br>ENGINEERING SERVICES<br>CITY OF SPOKANE, WASHINGTON<br>STANDARD PLAN No. Z-106A |

Back to Section Z - TOC

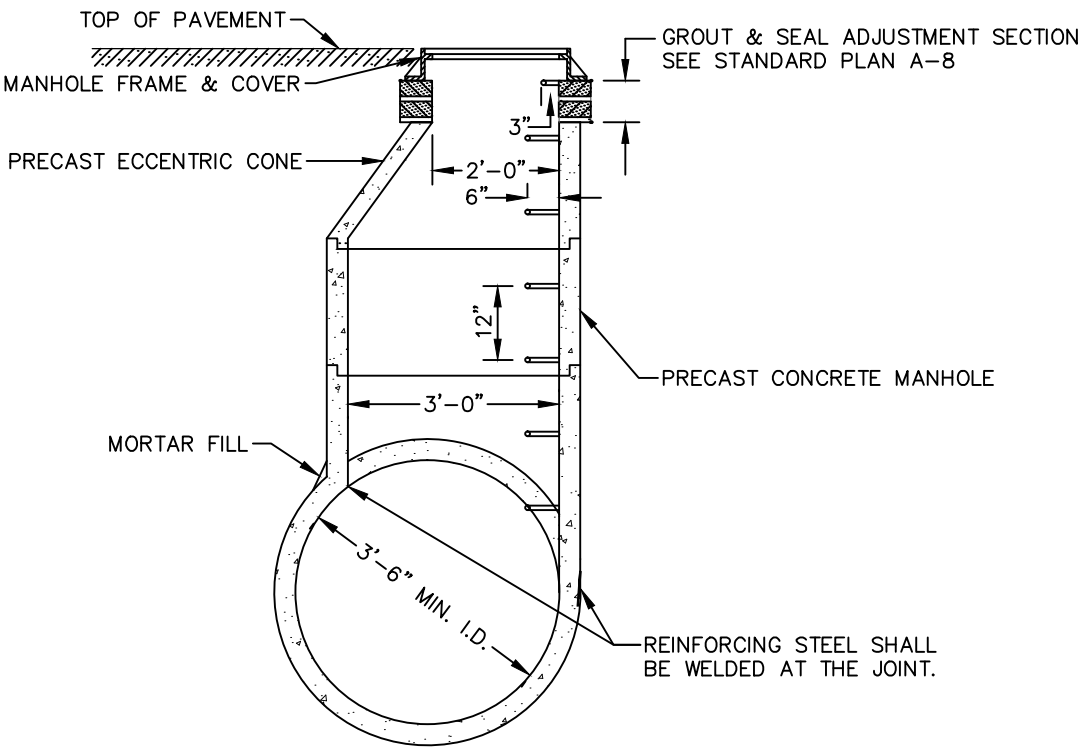


## SECTION A-A

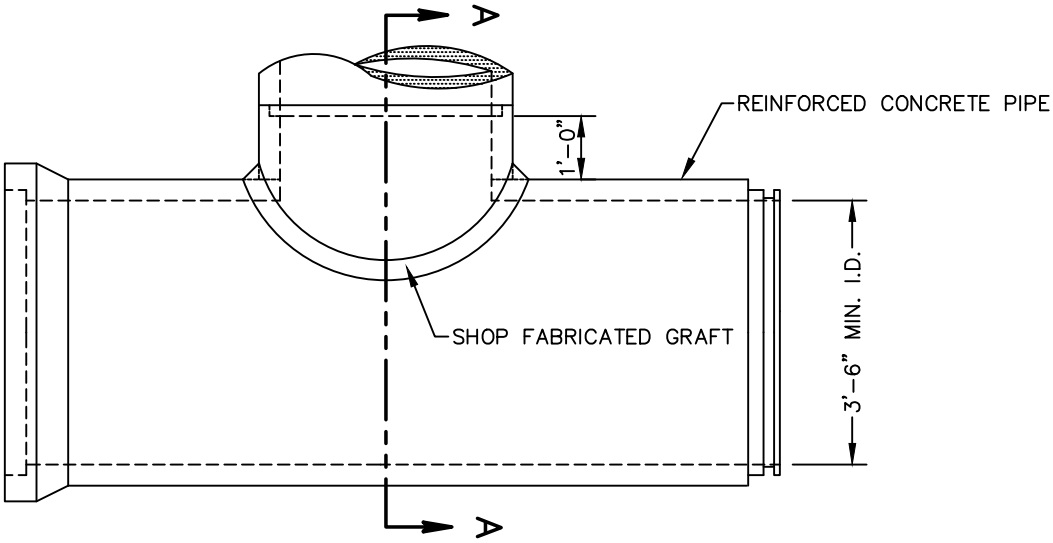


NOTES:

1. SEE SECTIONS 7-05 & 9-12.4 FOR PRECAST CONCRETE MANHOLES.
2. SEE STANDARD PLANS A-12 & A-13 FOR MANHOLE FRAME & COVER.
3. SEE STANDARD PLAN Z-109 FOR M.H. STEP DETAILS.
4. CONE & BARREL JOINT(S) MAY BE EITHER TONGUE & GROOVE OR REVERSE TONGUE & GROOVE.
5. CONE ADJUSTMENT SECTION & BARREL JOINT(S) TO BE SEALED PER SECS 7-05 & 9-04.
6. ADDITIONAL REINFORCING AND/OR SPECIAL BEDDING FOR THE REINFORCED CONC PIPE SHALL BE AS SPECIFIED.
7. RISER DIA MAY BE 4'-0" FOR REINFORCED CONC PIPE SIZES 4'-0" & LARGER.
8. SEE STANDARD PLAN A-8 FOR ADJUSTMENT SECTION REQUIREMENTS.

| | | |
|---|---|---|
| APPROVED BY<br>ENGINEERING SERVICES DIRECTOR — KYLE TWOHIG<br>CITY ENGINEER — DAN BULLER, P.E. | ADOPTED: _____<br>REVISED: 10/2019<br>SUPERSEDES: 01/2017<br>CHECKED BY: JAG<br>SCALE: NTS<br>DWG/REV. BY: MDH/MLD | MANHOLE – TYPE V<br>SPOKANE<br>ENGINEERING SERVICES<br>CITY OF SPOKANE, WASHINGTON<br>STANDARD PLAN No. Z-107 |

Back to Section Z - TOC

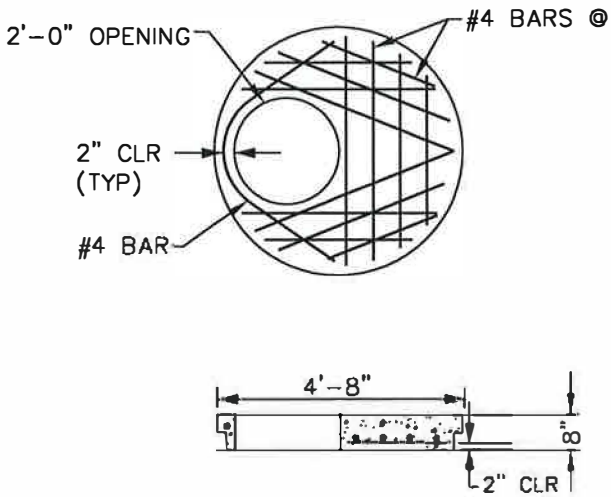


SLAB FOR 4'-0" I.D. MANHOLE

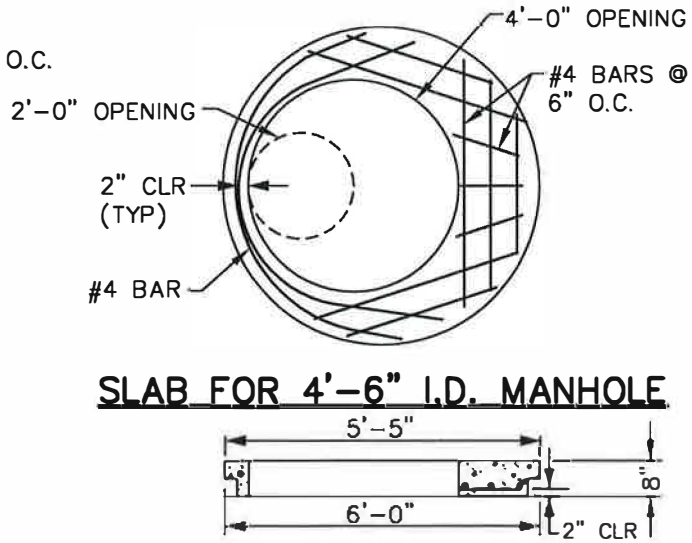


SLAB FOR 4'-6" I.D. MANHOLE

SLAB FOR 5'-0" I.D. MANHOLE

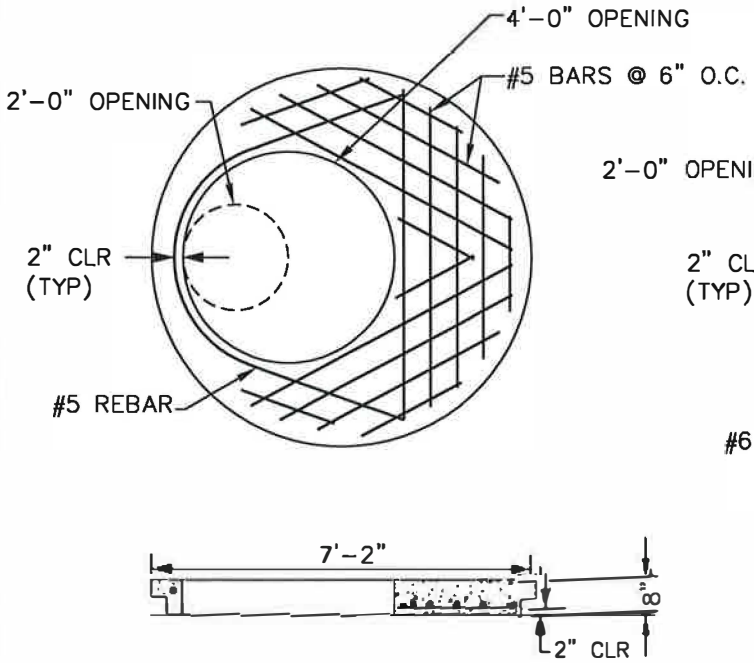


SLAB FOR 6'-0" I.D. MANHOLE

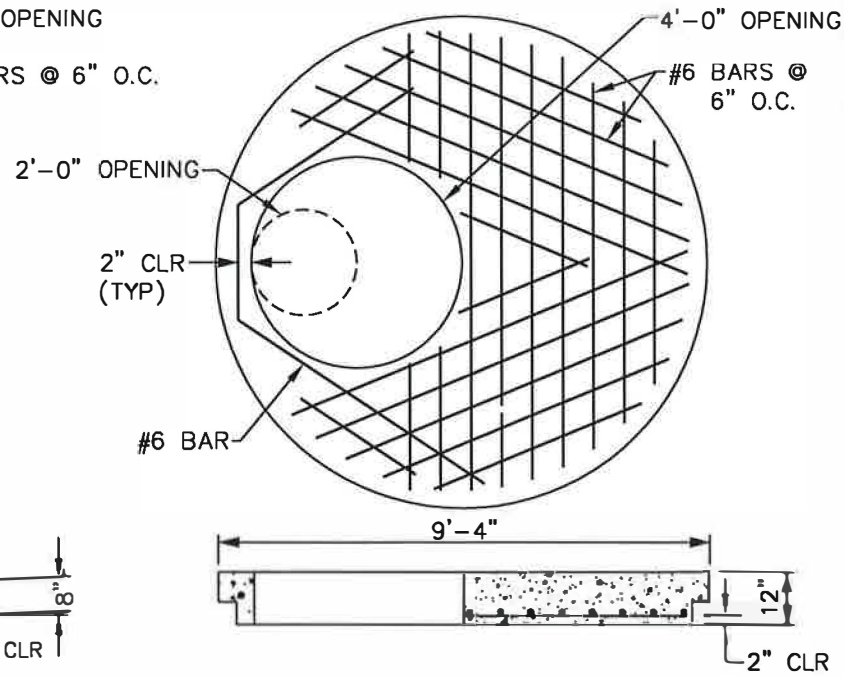


SLAB FOR 8'-0" I.D. MANHOLE

NOTES:

1. PLACE REBAR NEAR BTM FACE OF SLAB AT INDICATED CLEARANCES.
2. REINFORCING STEEL SHALL BE STD DEFORMED BAR; YIELD STRESS, Fy = 40 KSI.

| | | |
|---|---|---|
| APPROVED BY<br>DIRECTOR, ENGINEERING SERVICES — TOM L. ARNOLD, P.E.<br>PRINCIPAL ENGINEER, DESIGN — KEN M. BROWN, P.E. | ADOPTED: 2/86<br>REVISED: 4/2004<br>SUPERSEDES:<br>SCALE: NTS<br>DWG/REV. BY: MDH | MANHOLE – REDUCING SLAB<br>REINFORCEMENT DETAILS<br>ENGINEERING SERVICES<br>CITY OF SPOKANE, WASHINGTON<br>STANDARD PLAN No. Z-108 |

Back to Section Z - TOC

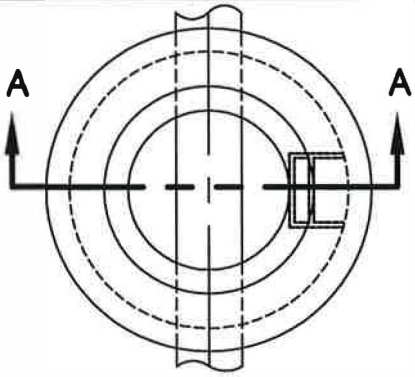


PLAN

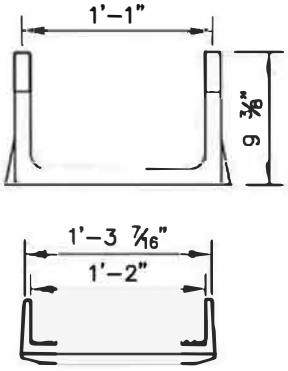


MANHOLE STEP

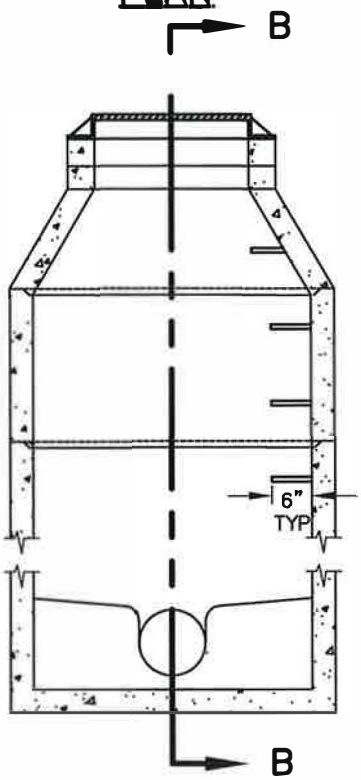


SECTION A-A

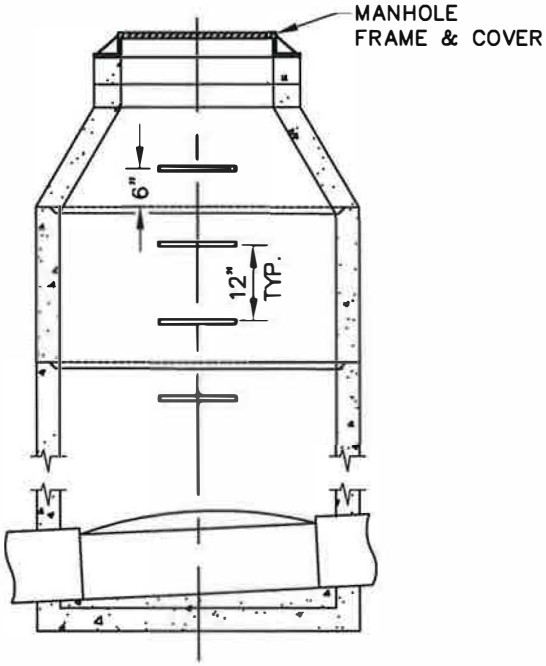


SECTION B-B

**NOTES:**

1. MANHOLE STEPS SHALL BE GROUTED INTO THE PRECAST CONCRETE WALL. STEPS SHALL BE UNIFORMLY SPACED AT 12" O.C. VERTICALLY, LEVELED HORIZONTALLY, & ALIGNED ALONG THE MANHOLE'S C/L.
2. MANHOLES W/ OUT REDUCING SLABS SHALL HAVE THE STEPS LOCATED ABOVE THE SHELF. MANHOLES WITH REDUCING SLABS SHALL HAVE THE STEPS CENTERED BELOW THE SLAB ACCESS HOLE & THE UPSTREAM PIPE.
3. MANHOLE STEPS SHALL BE POLYPROPYLENE W/ANTI-SLIP TREAD DESIGN & TWO REFLECTORS PER STEP.

| | | |
|---|---|---|
| APPROVED BY<br>DIRECTOR, ENGINEERING SERVICES PERRY M. TAYLOR, P.E.<br>PRINCIPAL ENGINEER, CONST. KENNETH M. BROWN, P.E. | ADOPTED: 02/1986<br>REVISED: 04/2012<br>SUPERSEDES: 09/2010<br>CHECKED BY: SJS<br>SCALE: NTS<br>REVISED BY: LWK | MANHOLE<br>STEP DETAILS<br>ENGINEERING SERVICES<br>CITY OF SPOKANE, WASHINGTON<br>STANDARD PLAN No. Z-109 |

Back to Section Z - TOC

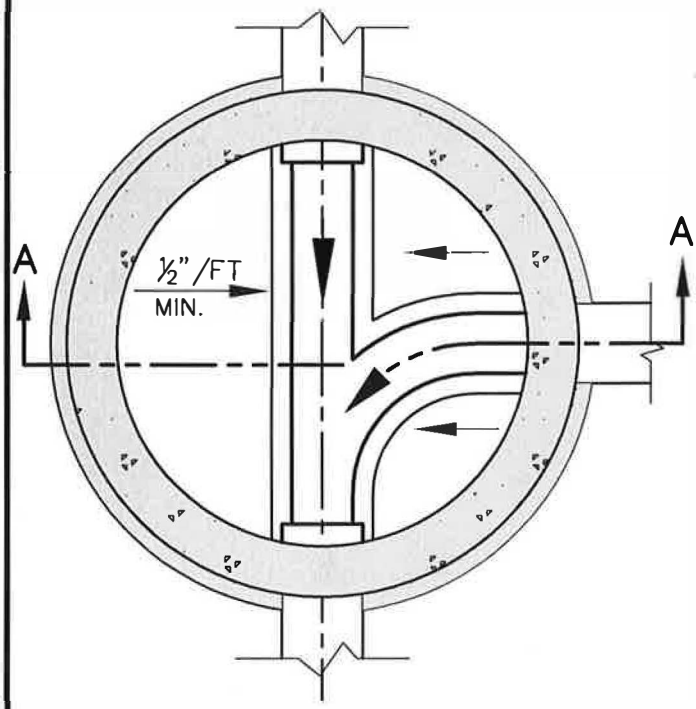


PLAN

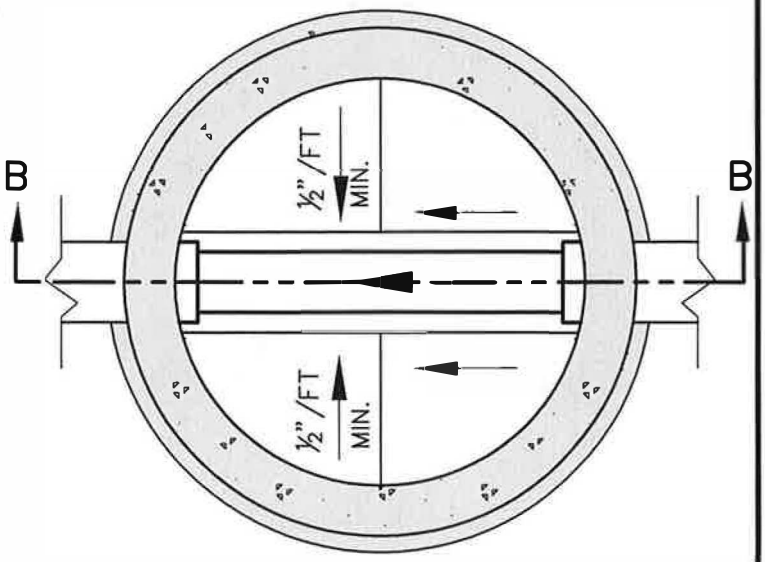


PLAN

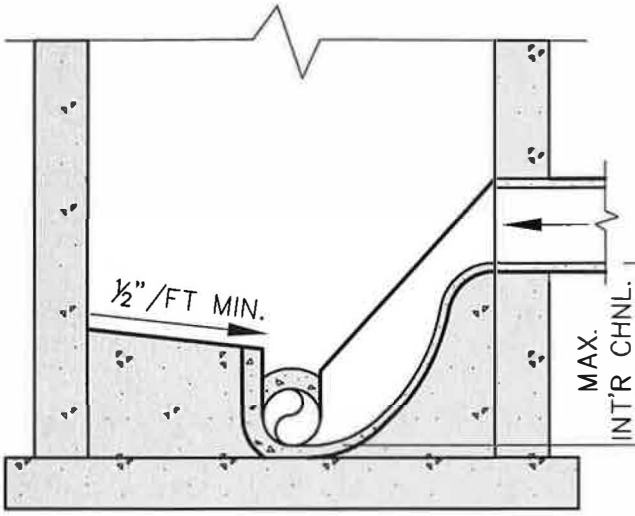


SECTION A–A

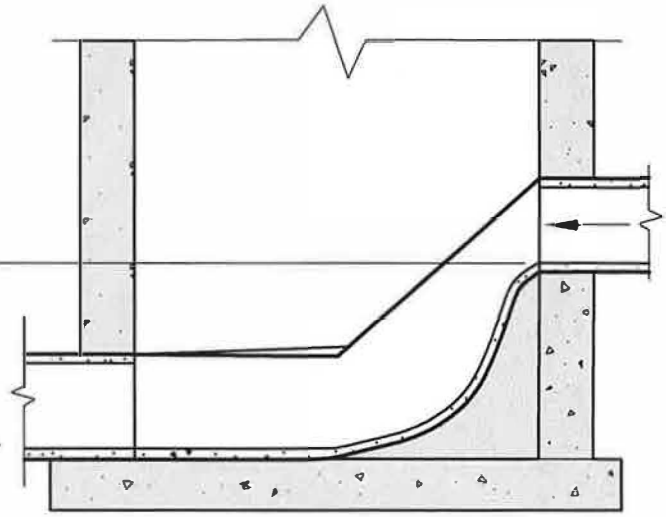

SECTION B–B

| MANHOLE I.D. INCHES | MAX. INT'R CHNL. DROP INCHES |
|---|---|
| 48 | 18 |
| 54 | 22 |
| 72 | 30 |
| 96 | 40 |

APPROVED BY

DIRECTOR, ENGINEERING SERVICES TOM L. ARNOLD, P.E.

PRINCIPAL ENGINEER, DESIGN GARY S. NELSON, P.E.

ADOPTED: 2/86
REVISED: 05/2007
SUPERSEDES: 12/98
CHECKED BY: JAG
SCALE: NTS
DWG/REV. BY: DGB/MDH

MANHOLE – INTERIOR
CHANNEL DROP

ENGINEERING SERVICES
CITY OF SPOKANE, WASHINGTON

STANDARD PLAN No. Z–110

Back to Section Z - TOC

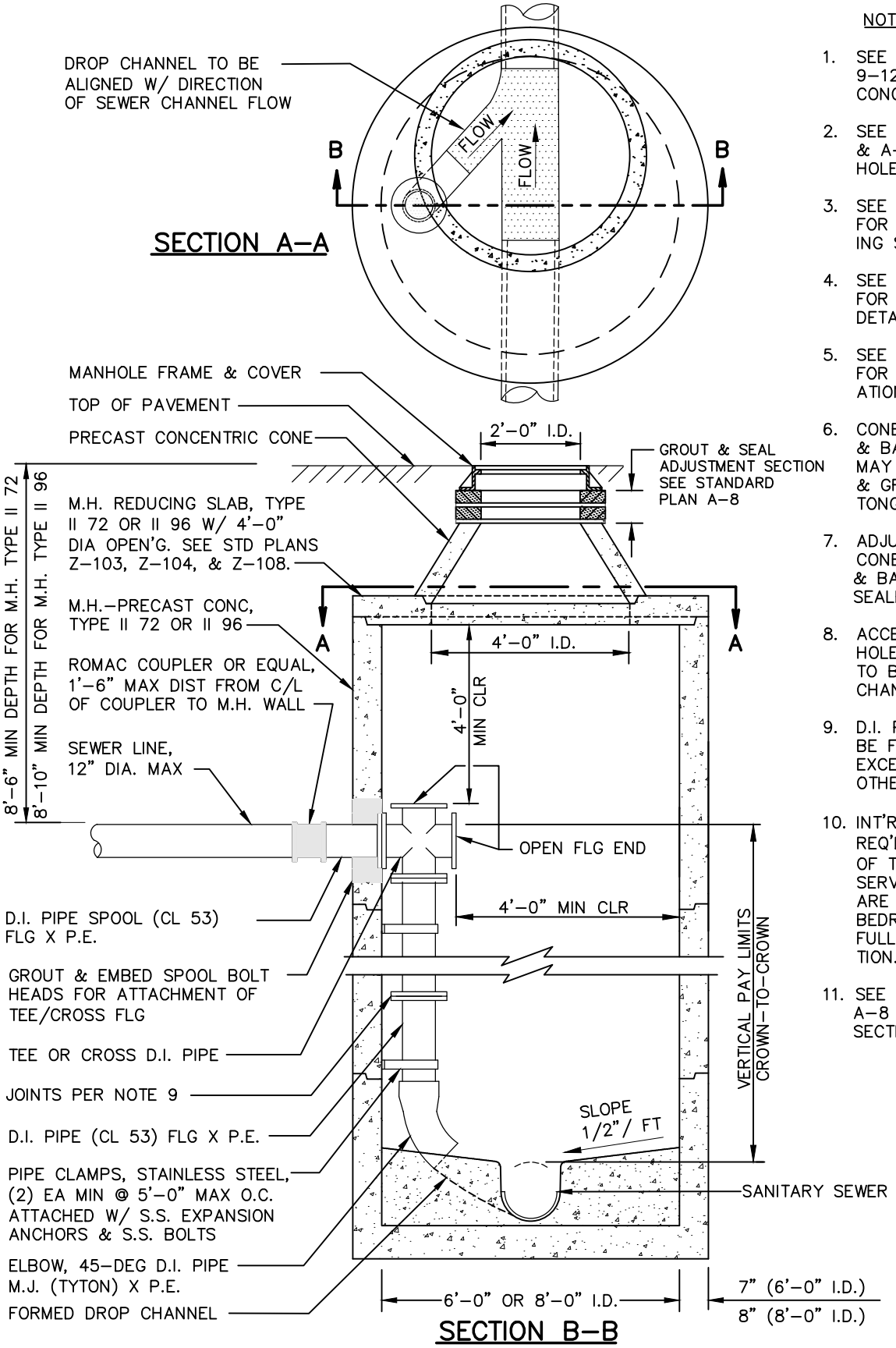


NOTES:

1. SEE SECTIONS 7–05 & 9–12.4 FOR PRECAST CONCRETE MANHOLES.
2. SEE STD PLANS A–12 & A–13 FOR MAN–HOLE FRAME & COVER.
3. SEE STD PLAN Z–108 FOR MANHOLE REDUC–ING SLABS.
4. SEE STD PLAN Z–109 FOR MANHOLE STEP DETAILS.
5. SEE STD PLAN Z–118 FOR BASE & FOUND–ATION DETAILS.
6. CONE, REDUCING SLAB & BARREL JOINTS MAY BE EITHER TONGUE & GROOVE OR REVERSE TONGUE & GROOVE.
7. ADJUSTMENT SECTION, CONE, REDUCING SLAB & BARREL JOINTS TO BE SEALED PER SEC 7–05.3.
8. ACCESS HOLES OF MAN–HOLE & REDUCING SLAB TO BE CENTERED OVER CHANNEL.
9. D.I. PIPE JOINTS SHALL BE FLANGE JOINTS, EXCEPT AS NOTED OTHERWISE.
10. INT'R DROPS SHALL REQ'D THE APPROVAL OF THE CITY ENG'R SERVICES DEPT. DROPS ARE UTILIZED WHERE BEDROCK PREVENTS FULL–DEPTH EXCAVA–TION.
11. SEE STANDARD PLAN A–8 FOR ADJUSTMENT SECTION REQUIREMENTS.

APPROVED BY

ENGINEERING SERVICES DIRECTOR — KYLE TWOHIG

CITY ENGINEER — DAN BULLER, P.E.

ADOPTED: _____
REVISED: 10/2019
SUPERSEDES: 01/2017
CHECKED BY: JAG
SCALE: NTS
DWG/REV. BY: MDH/TSS

# MANHOLE–INTERIOR D.I.P. DROP

SPOKANE

ENGINEERING SERVICES
CITY OF SPOKANE, WASHINGTON

STANDARD PLAN No. Z–111

Back to Section Z - TOC

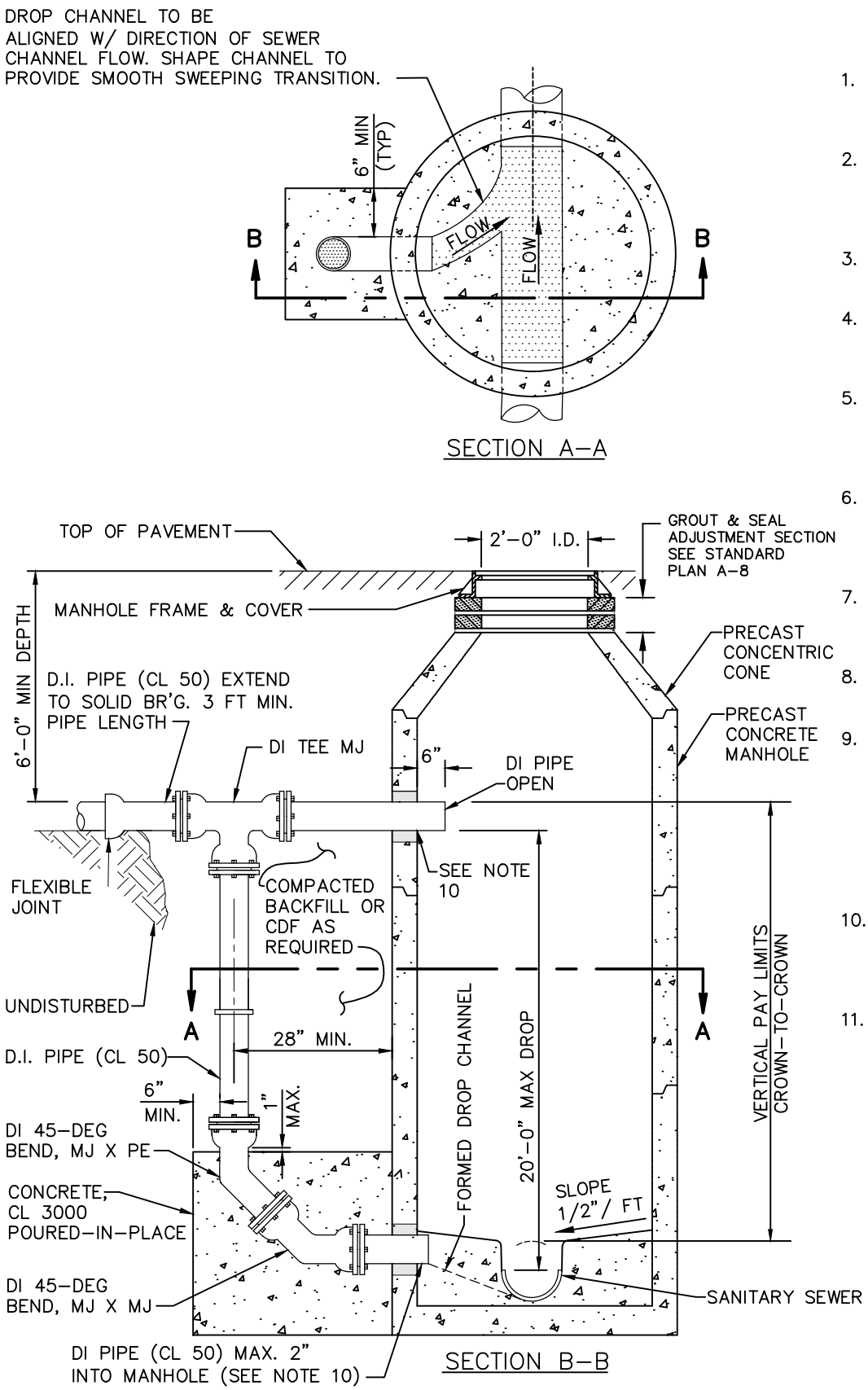


NOTES:

1. SEE SECS 7–05 & 9–12.4 FOR PRECAST CONCRETE MANHOLES.
2. SEE STD PLANS A–12 & A–13 FOR MANHOLE FRAME & COVER.
3. SEE STD Z–109 FOR MANHOLE STEP DETAILS.
4. SEE STD PLAN Z–118 FOR BASE & FOUN–DATION DETAILS.
5. CONE & BARREL JOINTS MAY BE EITHER TONGUE & GROOVE OR REVERSE TONGUE & GROOVE.
6. ADJUSTMENT SECTION, CONE & BARREL JOINTS TO BE SEALED PER SEC 7–05.3.
7. ACCESS HOLE TO BE CENTERED OVER CHANNEL.
8. D.I. PIPE JOINTS SHALL BE MECHANICAL JOINTS.
9. EXT'R PIPE DROPS SHALL REQUIRE THE APPROVAL OF THE CITY ENG'R SERVICES DEPT. DROPS ARE UTILIZED WHERE BEDROCK PREVENTS FULL–DEPTH EXCAVATION.
10. GROUT ENTIRE CIRCUM–FERENCE OF PIPE ANNULUS AROUND PIPE PENETRATION.
11. SEE STANDARD PLAN A–8 FOR ADJUSTMENT SECTION REQUIREMENTS.

APPROVED BY

ENGINEERING SERVICES DIRECTOR — KYLE TWOHIG

CITY ENGINEER — DAN BULLER, P.E.

ADOPTED: _____
REVISED: 10/2019
SUPERSEDES: 01/2017
CHECKED BY: JAG
SCALE: NTS
DWG/REV. BY: MDH/MLD

# MANHOLE – EXTERIOR D.I.P. DROP

SPOKANE

ENGINEERING SERVICES
CITY OF SPOKANE, WASHINGTON

STANDARD PLAN No. Z–112

Back to Section Z - TOC

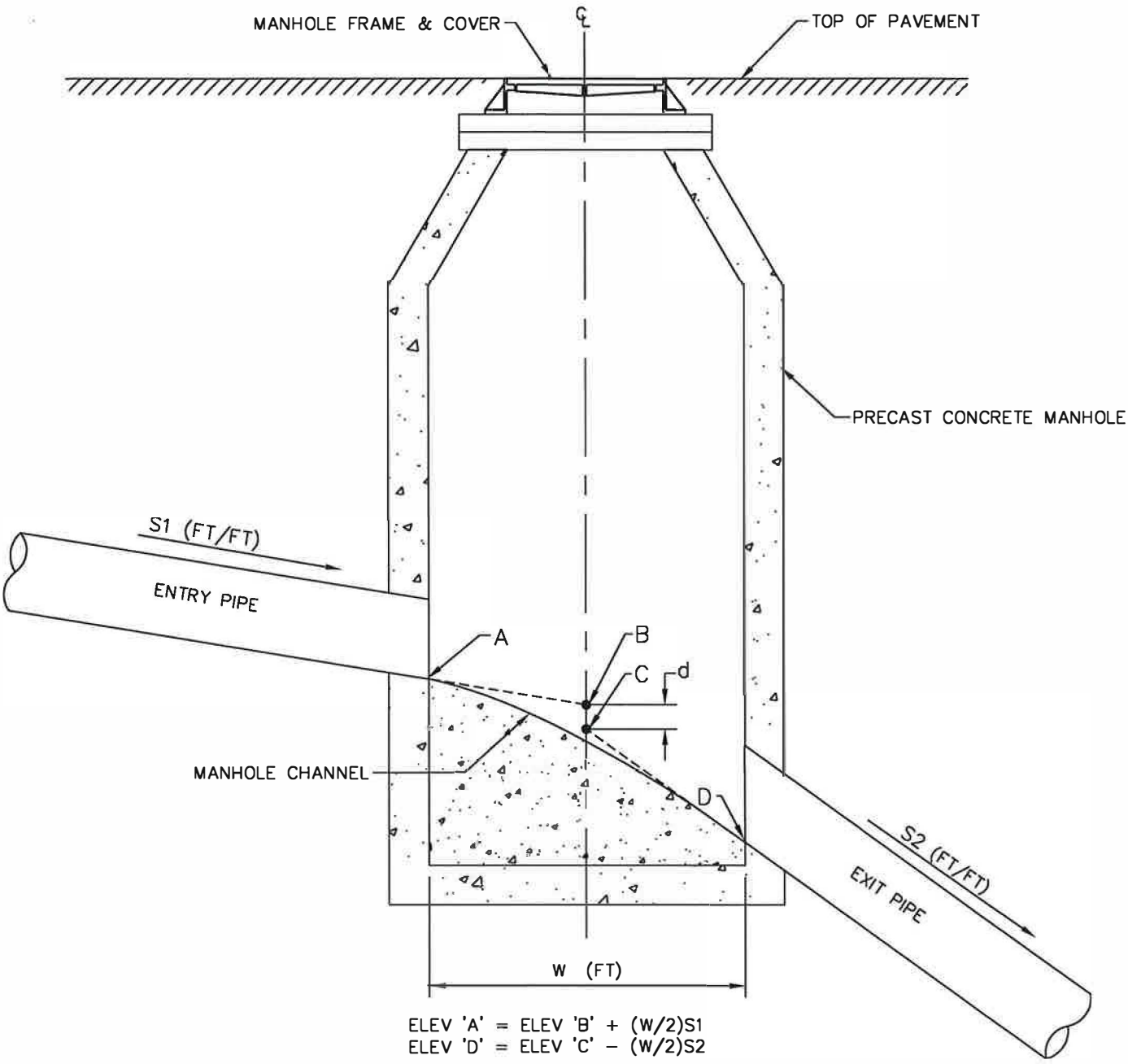


ELEV 'A' = ELEV 'B' + (W/2)S1
ELEV 'D' = ELEV 'C' − (W/2)S2

NOTES:

1. ELEV 'A' IS THE INVERT ELEVATION OF THE ENTRY PIPE @ THE MANHOLE WALL ON GRADE S1.
2. ELEV'S 'B' & 'C' ARE THE DESIGN INVERT ELEVATIONS OF THE ENTRY/EXIT PIPES @ THE MANHOLE C/L.
3. ELEV 'D' IS THE INVERT ELEVATION OF THE EXIT PIPE @ THE MANHOLE WALL ON GRADE S2.
4. DIMENSION 'd' IS THE REQ'D MIN CHANNEL DROP PER DESIGN STD 4.2-6.
5. SEE STD PLANS Z-110, Z-111, & Z-112 FOR CHANNEL DROPS IN EXCESS OF THE MIN DROP.

| | | |
|---|---|---|
| APPROVED BY<br>DIRECTOR, ENGINEERING SERVICES — TOM L. ARNOLD, P.E.<br>PRINCIPAL ENGINEER, DESIGN — KEN M. BROWN, P.E. | ADOPTED: 4/2004<br>REVISED:<br>SUPERSEDES: Z-111 12/98<br>SCALE: NTS<br>DWG/REV. BY: MDH/TSS | MANHOLE – PIPE INVERT ELEVATIONS<br>ENGINEERING SERVICES<br>CITY OF SPOKANE, WASHINGTON<br>STANDARD PLAN No. Z-113 |

Back to Section Z - TOC

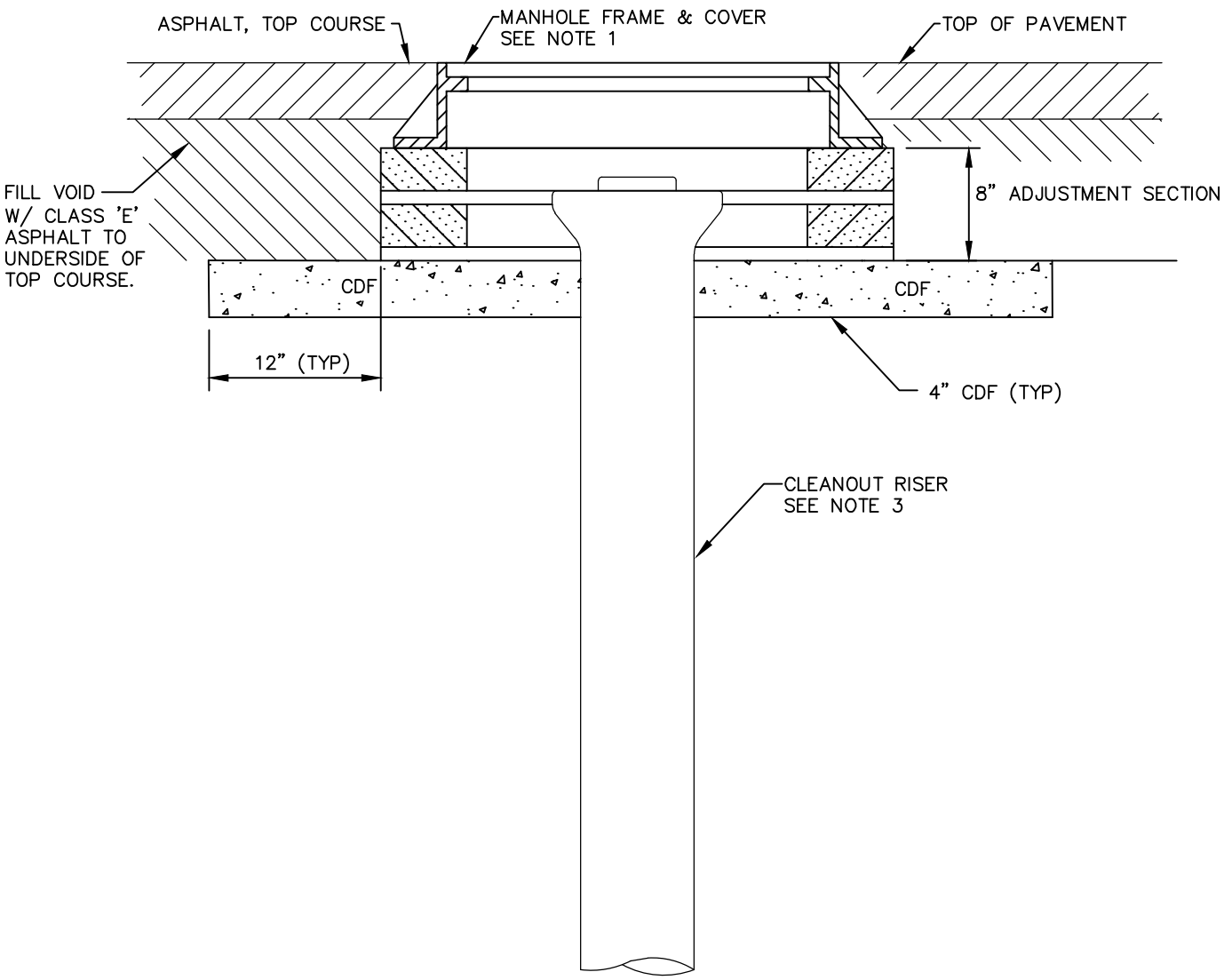


NOTES:

1. SEE STD PLANS A–12 & A–13 FOR MANHOLE FRAME & COVER.
2. ACCESS HOLE TO BE CENTERED OVER CLEANOUT.
3. TOP OF CLEANOUT SHALL EXTEND TO A POINT NOT LESS THAT 6" NOR MORE THAN 12" BELOW TOP OF MANHOLE COVER. CLEANOUTS SHALL BE PLUGGED W/ A REMOVABLE STOPPER WHICH SHALL PREVENT PASSAGE OF DIRT OR WATER.

| | | |
|---|---|---|
| APPROVED BY<br>ENGINEERING SERVICES DIRECTOR KYLE TWOHIG<br>CITY ENGINEER DAN BULLER, P.E. | ADOPTED:<br>REVISED: 10/2019<br>SUPERSEDES: 4/2004<br>SCALE: NTS<br>DWG/REV. BY: TSS | SEWER CLEANOUT<br>SPOKANE ENGINEERING SERVICES<br>CITY OF SPOKANE, WASHINGTON<br>STANDARD PLAN No. Z–114 |

Back to Section Z - TOC

SEE STANDARD PLAN Z-116 FOR REQUIREMENTS FOR USE OR TEE OR WYE RISER CONNECTIONS.

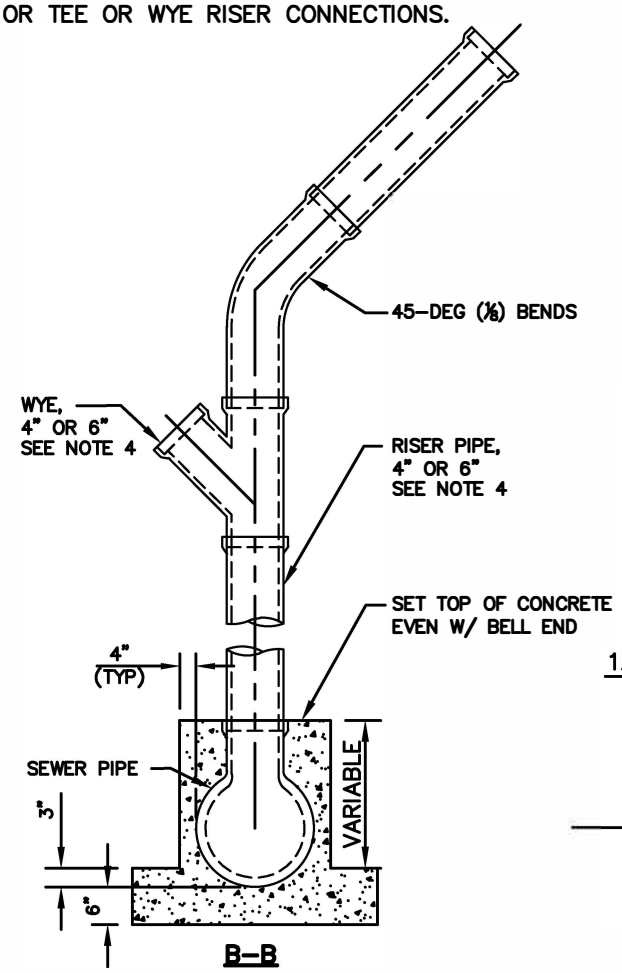


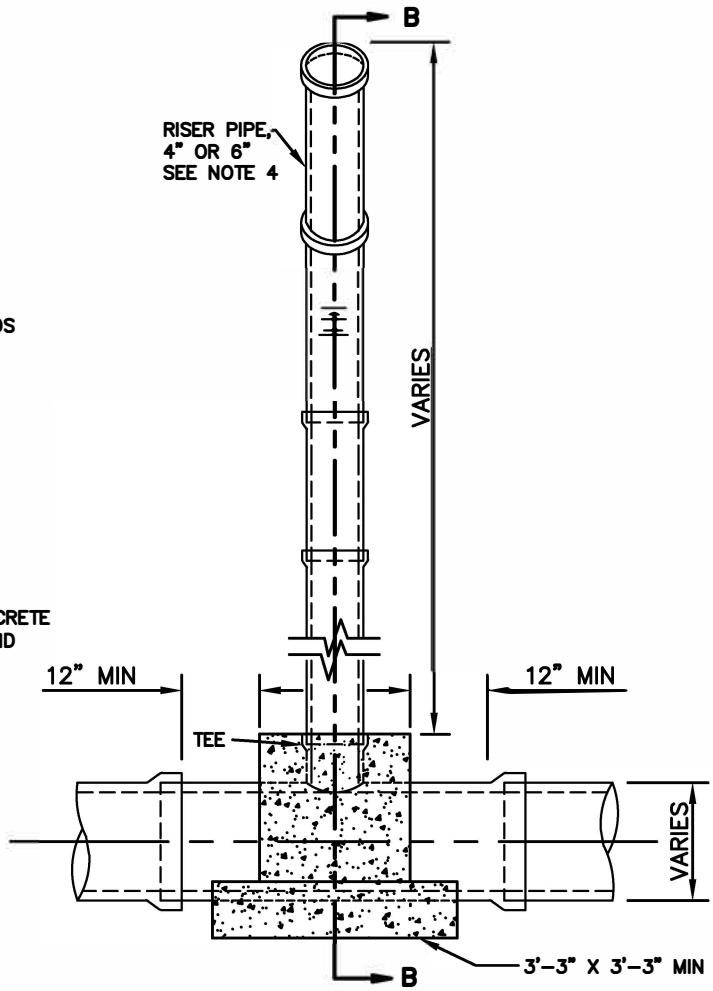


NOTES:

1. SEE SEC 7-17 FOR SANITARY SEWER PIPE.
2. SEE DESIGN STANDARD 4.3 FOR SIDE-SEWERS.
3. CONCRETE SHALL BE CLASS 3000 PER SEC 6-02.
4. A MAX OF (2) SIDE-SEWER BRANCHES ARE ALLOWED OFF A VERTICAL RISER. SIDE-SEWER BRANCHES SHALL BE NO LARGER THAN THE SIZE OF THE VERTICAL RISER.VERTICAL RISER SHALL BE MAX 6" DIAMETER PIPE.
5. USE OF THIS RISER CONNECTION IS FOR SPECIAL CONDITIONS ONLY AND REQUIRES PRIOR APPROVAL OF THE CITY ENGINEER.

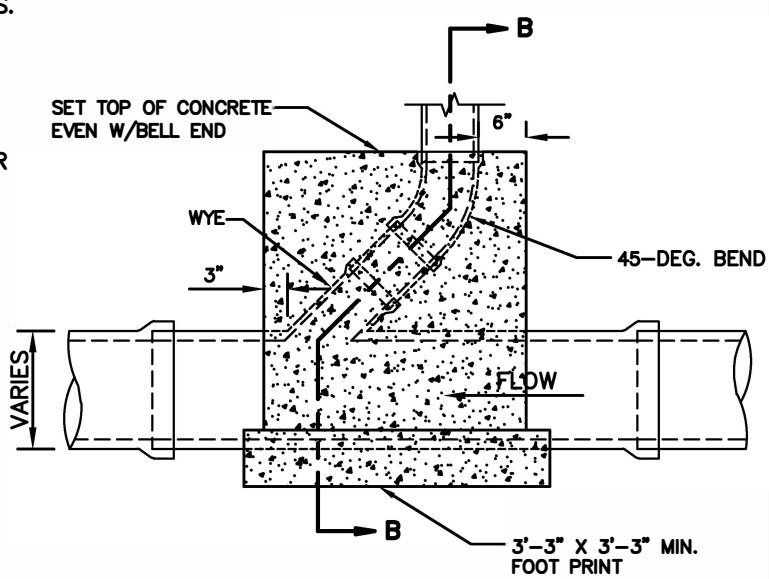


| | | |
|---|---|---|
| APPROVED BY<br>ENGINEERING OPERATIONS MANAGER KYLE TWOHIG<br>CITY ENGINEER DANIEL ALBERT BULLER, P.E. | ADOPTED: 4/2004<br>REVISED: 02/2018<br>SUPERSEDES: 04/2013<br>SCALE: NTS<br>REVISED BY: MDH/MLD | SIDE-SEWER RISER CONNECTION<br>ENGINEERING SERVICES<br>CITY OF SPOKANE, WASHINGTON<br>STANDARD PLAN No. Z-115 |

Back to Section Z - TOC

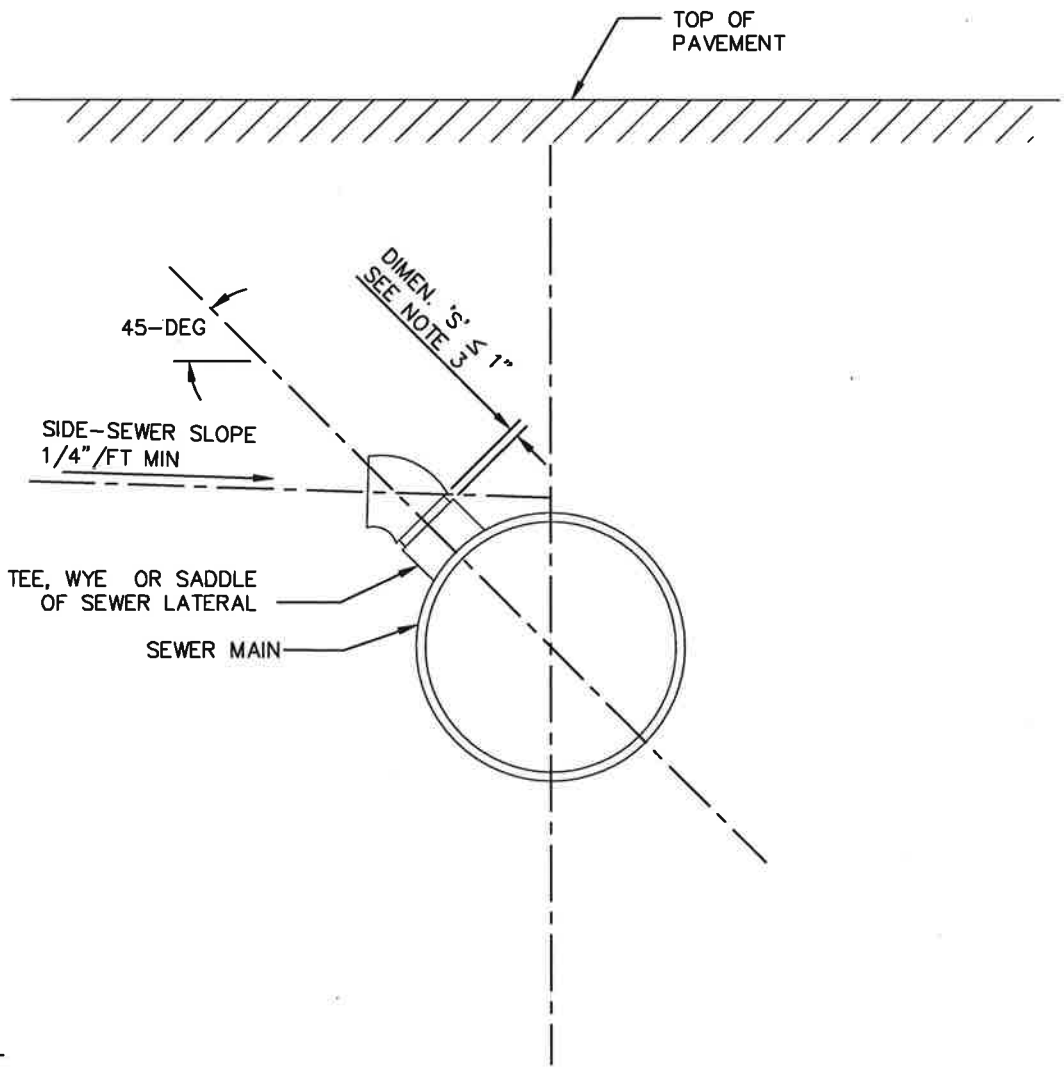


NOTES:

1. SEE DESIGN STANDARD 4.3 FOR SIDE-SEWERS.
2. RESIDENTIAL AREAS REQUIRE A 4" MIN SIDE-SEWER STUB. COMMERCIAL AREAS REQUIRE A 6" MIN SIDE-SEWER STUB.
3. DIMENSION 'S' MAY BE INCREASED TO PROVIDE A DESIRED SIDE-SEWER DEPTH @ PROPERTY LINE, IF APPROVED BY THE CITY ENGINEER.
4. THE FIRST SIDE SEWER CONNECTION OF ANY SIZE (4" OR 6") DOWNSTREAM OF AN END OF RUN MANHOLE SHALL BE A WYE CONNECTION.
5. FOR OTHER 4" SIDE SEWER CONNECTIONS, TEES OR WYES MAY BE USED TO CONSTRUCT SIDE SEWER CONNECTIONS.
6. ONLY WYE CONNECTIONS SHALL BE USED FOR 6" SIDE SEWERS CONNECTING TO SEWER MAINS UP TO AND INCLUDING 21" DIAMETER.
7. TEES OR WYES ARE ALLOWED FOR 6" SIDE SEWER CONNECTIONS TO SEWER MAINS LARGER THAN 21" DIAMETER.

| APPROVED BY | | |
|---|---|---|
| ENGINEERING OPERATIONS MANAGER KYLE TWOHIG | ADOPTED: 4/2004 | **SIDE-SEWER** TYPICAL CONNECTION |
| | REVISED: 01/2017 | |
| | SUPERSEDES: 4/2013 | |
| CITY ENGINEER DANIEL ALBERT BULLER, P.E. | SCALE: NTS | ENGINEERING SERVICES CITY OF SPOKANE, WASHINGTON |
| | DWG/REV. BY: PCF/MLD | STANDARD PLAN No. **Z-116** |

Back to Section Z - TOC

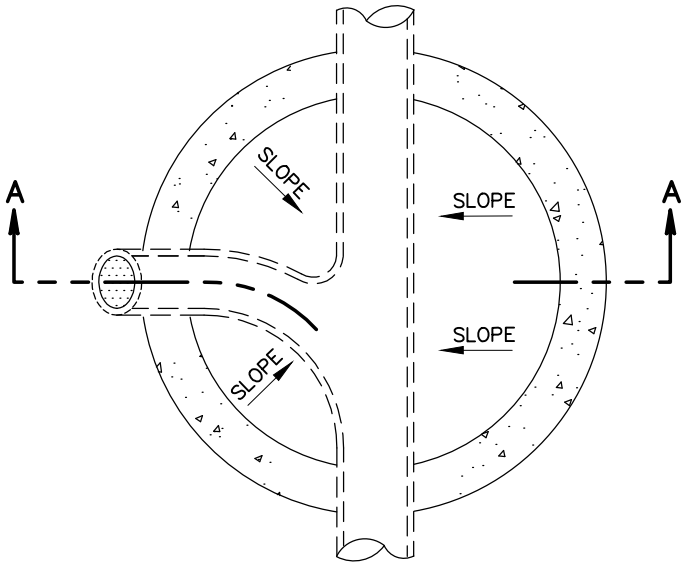


PLAN

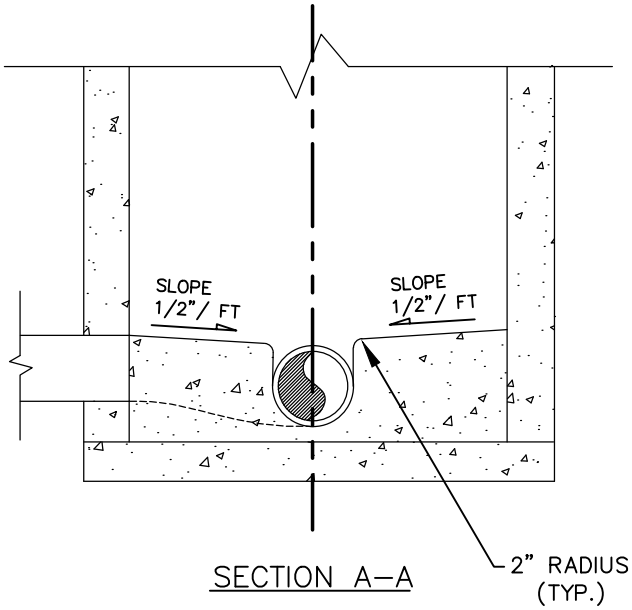


SECTION A–A

GENERAL NOTES:

1. THE SHELF AND CHANNEL SHALL HAVE A SMOOTH FINISH
2. CONSTRUCT SHELF TO THE CROWN LINE OF PIPE
3. SLOPE BENCHES 1:24

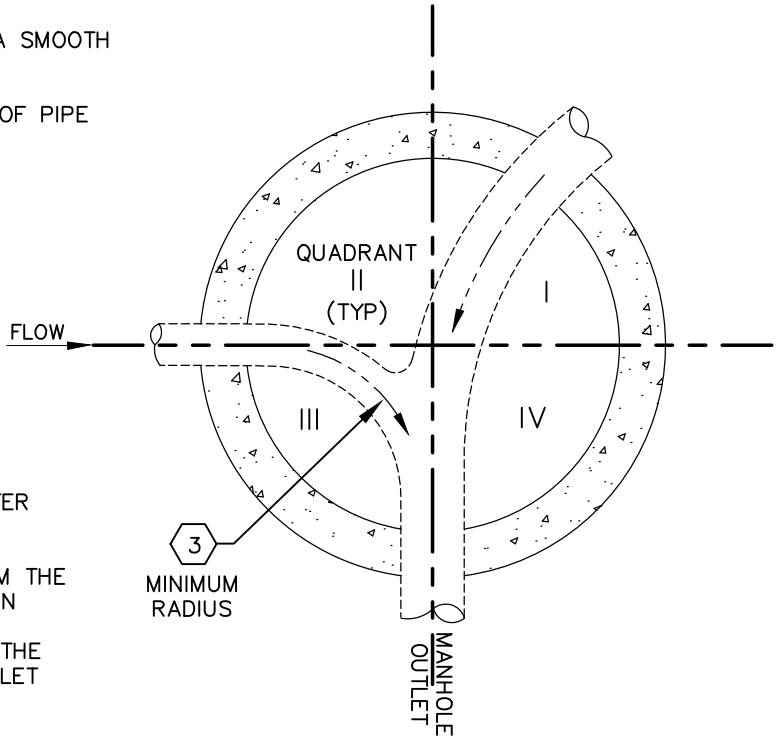


QUADRANT PLAN VIEW

QUADRANT NOTES:

1. NO SEWER PIPE (CENTERLINE) SHALL ENTER MANHOLE IN QUADRANT III & IV
2. EXCEPT FOR A MANHOLE INLET 180° FROM THE CENTERLINE OF ANY CHANNEL ENTERING IN QUADRANT I OR II SHALL BE A SMOOTH, CONTINOUS ARC THAT IS A TANGENT TO THE CENTERLINE OF THE OUTLET PIPE AT OUTLET MANHOLE WALL
3. MINIMUM RADIUS OF ANY MANHOLE CHANNEL CENTERLINE SHALL BE EQUAL TO THE MANHOLE INSIDE DIAMETER

| | | |
|---|---|---|
| APPROVED BY<br>ENGINEERING SERVICES DIRECTOR — KYLE TWOHIG<br>CITY ENGINEER — DAN BULLER, P.E. | ADOPTED: 02/2019<br>REVISED:<br>SUPERSEDES:<br>CHECKED BY: WRP<br>SCALE: NTS<br>REVISED BY: CDJ | MANHOLE CHANNEL DETAIL – TYPICAL<br>SPOKANE<br>ENGINEERING SERVICES<br>CITY OF SPOKANE, WASHINGTON<br>STANDARD PLAN No. Z–117 |

Back to Section Z - TOC

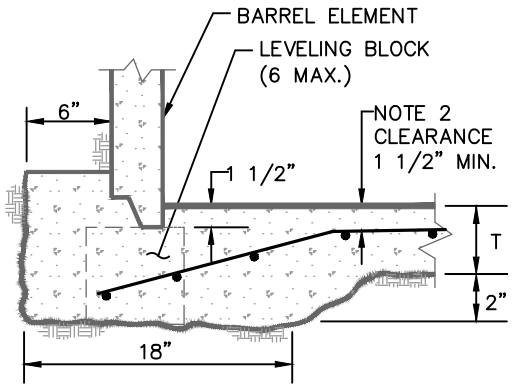


CAST IN PLACE BASE SLAB
(CAST AROUND BARREL)

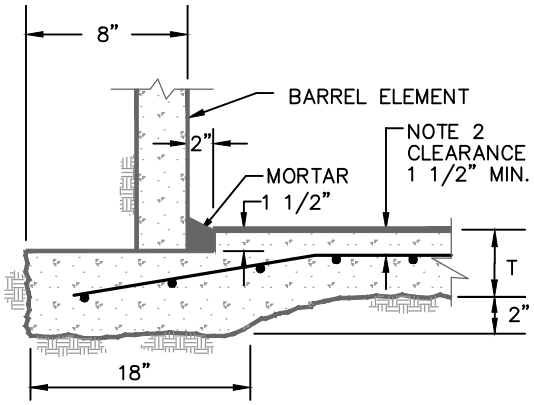


CAST IN PLACE BASE SLAB
(SEPARATE FROM BARREL)

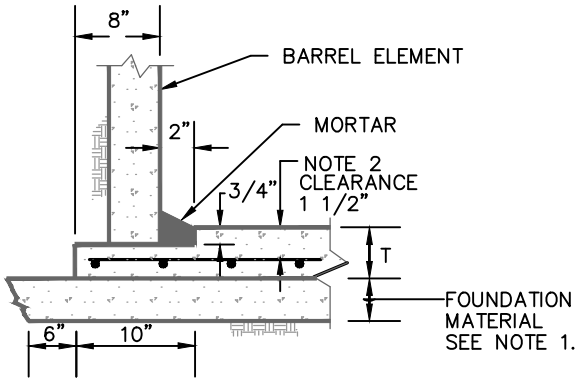


PRECAST BASE SLAB

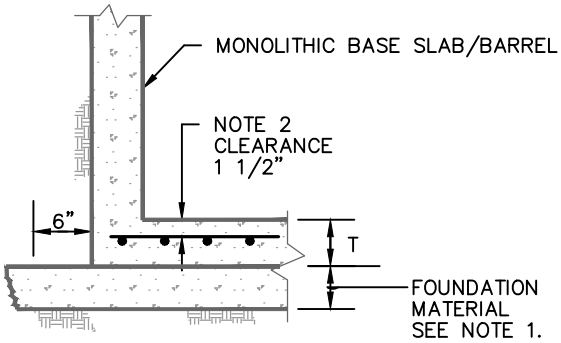


PRECAST MONOLITHIC
BASE SLAB / BARREL

| BASE SLAB MINIMUM REINFORCEMENT SCHEDULE | | | |
|---|---|---|---|
| BARREL SIZE | T | METHOD OF SLAB CONSTRUCTION | |
| | | PRECAST OR CAST-IN-PLACE | MONOLITHIC SLAB & BARREL |
| ≤ 48" | 6" | #4 @ 10" E.W. | #4 @ 10" E.W. |
| 54" | 8" | #4 @ 12" E.W. | #4 @ 12" E.W. |
| 72" | 8" | #4 @ 6 1/2" E.W. | #4 @ 10" E.W. |
| 96" | 12" | #4 @ 6" E.W. | #4 @ 8" E.W. |

## GENERAL NOTES:

1. 6" MINIMUM COMPACTED DEPTH OF BEDDING MATERIAL MEETING THE REQUIRMENTS OF THE SPECIAL PROVISIONS, OR 4" OF GROUT AS DIRECTED BY THE ENGINEER. COMPACT BEDDING MATERIAL TO 92%, MINIMUM.
2. SEE SCHEDULE FOR BASE SLAB REINFORCEMENT.
3. SEE PLAN B-102C BASE DETAILS FOR DRYWELLS

APPROVED BY
Katy Allen
DIRECTOR, ENGINEERING SERVICES KATY D. ALLEN, P.E.
Jim R. Smith
PRINCIPAL ENGINEER, DESIGN JIM R. SMITH, P.E.

ADOPTED: 2/90
REVISED: 12/98
SUPERSEDES: 7/91
SCALE: N.T.S.
DWG./REV. BY: REP

CATCH BASIN, DRYWELL & MANHOLE BASE SLAB AND FOUNDATION DETAILS

SPOKANE
ENGINEERING SERVICES
CITY OF SPOKANE, WASHINGTON

STANDARD PLAN No.
Z-118