TABLE OF CONTENTS

CITY OF SPOKANE STANDARD PLANS – SECTION Y

B-101B = Revised Standard Plan
***W-108A = New Standard Plan
#A-1 = Renumbered Standard Plan

Back to Main TOC

Plan No.	Plan Title	Current Plan Date
Y-101	Hydrant Setting – Standard	2/17
Y-101A	Hydrant Setting – Offsets	2/17
Y-102	2" Air Valve for Ductile Iron Pipe	8/19
Y-103	Drywell Blow-off – Interior 4" Gate Valve	10/19
Y-103A	Drywell Blow-off – Exterior 4" Gate Valve	10/19
Y-104	Manhole Blow-off – Interior 4" Gate Valve	10/19
Y-105	Pumper Style Blow-off – Interior 4" Gate Valve	10/19
Y-105A	Pumper Style Blow-off - Exterior 4" Gate Valve	10/19
Y-108	Typical Ductile Iron Pipe Clamp for Pipe Up to 12" Dia	2/86
Y-109	Cast Iron Valve Box	2/17
#Y-110	*Renamed Std. Plan A-9*	
Y-111	Typical 1-2" Water Service	1/17
Y-112	PVC Water Meter Box – Typical Installation	1/17
Y-112A	Concrete Water Meter Box – Typical Installation	1/17
Y-113	48" Meter Vault	1/17
Y-114	48" Precast Concrete Vault	10/19
Y-115	Water Service Vault – Minimum Dimensions	2/17
Y-116	Water Meter Vault – Small	1/17
Y-117	Water Meter Vault – Large	1/17
Y-118	Domestic/Fire Line, 4" – 10" Service – Double Check Valve Assembly	1/17
Y-119	Irrigation Service with DCVA, 3" – 6"	1/17
Y-120	Domestic/Fire Line, 4" – 6", 8" or 10" – Service Reduced Pressure Assembly	1/17

Back to Section Y - TOC

SEE SEC. 9-30.5 OF
STANDARD SPECIFICATIONS

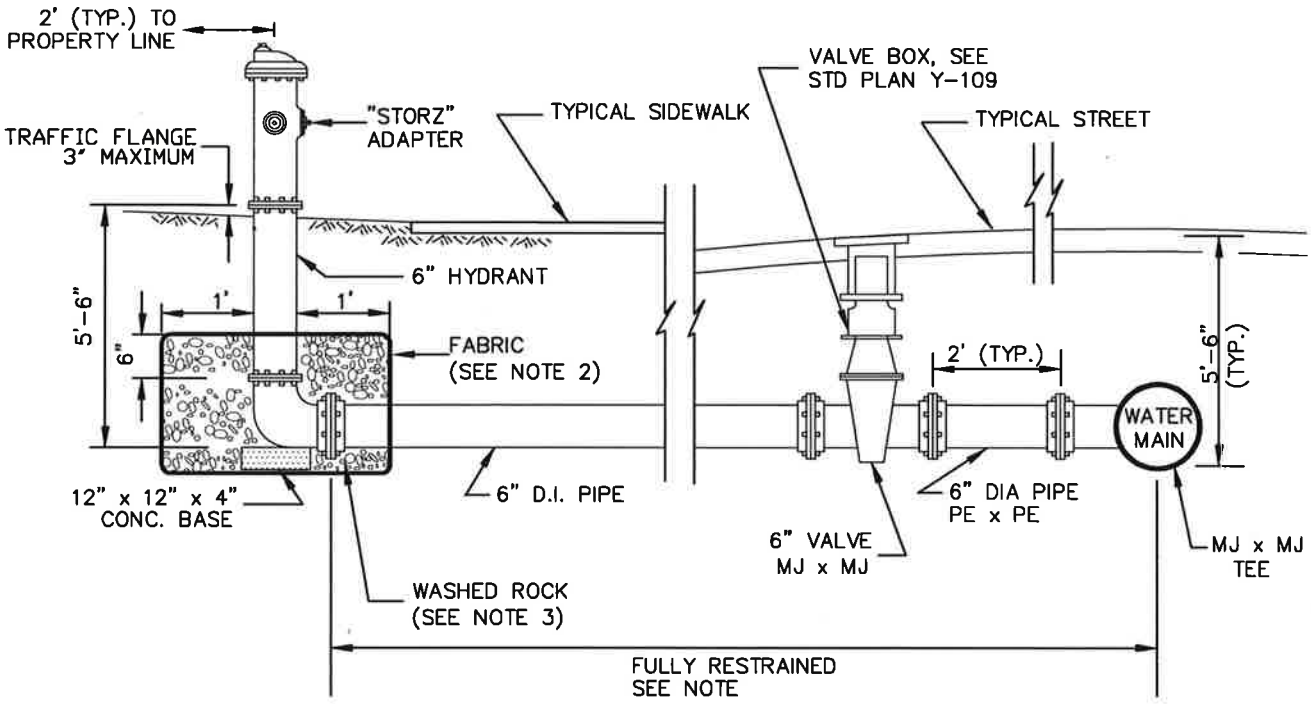

PROFILE

NOTES:

1. WATER DISTRIBUTION MATERIALS AND APPURTENANCES SHALL CONFORM TO SEC 9-30.

2. SEE SECTION 9-33 FOR WOVEN GEOTEXTILE FABRIC (MODERATE SURVIVABILITY, CLASS A). OVERLAP ALL FABRIC JOINTS 1'-6" MIN. WRAP AND SECURE FABRIC AROUND PIPE TO PREVENT MIGRATION OF FINES INTO GRAVEL ENVELOPE.

3. SEE SECTION 9-03.12(5) FOR GRAVEL BACKFILL FOR DRYWELLS.

APPROVED BY ENGINEERING OPERATIONS MANAGER KYLE TWOHIG CITY ENGINEER DANIEL ALBERT BULLER, P.E.	ADOPTED: 02/1986 REVISED: 02/2017 SUPERSEDES: 04/2012 SCALE: NTS DWG./REV BY: MB/MLD	**HYDRANT SETTING STANDARD** ENGINEERING SERVICES CITY OF SPOKANE, WASHINGTON STANDARD PLAN No. **Y-101**

Back to Section Y - TOC

SEE SEC. 9-30.5 OF STANDARD SPECIFICATIONS

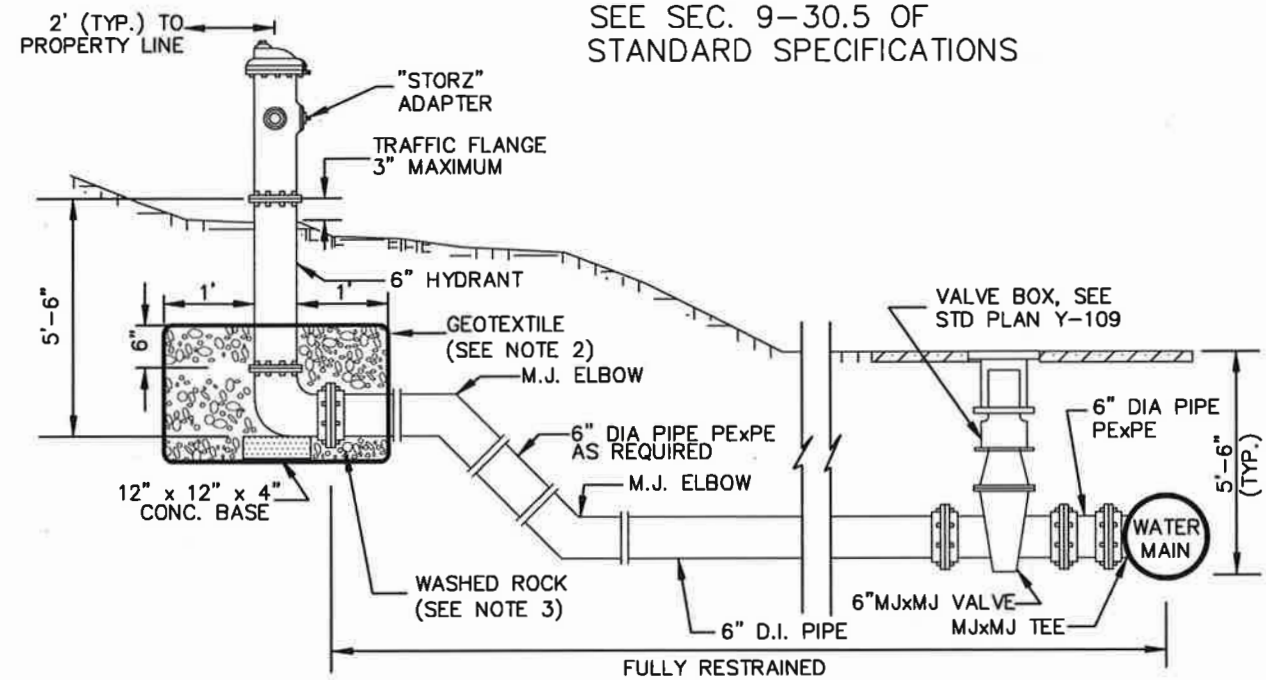

RAISED OFFSET

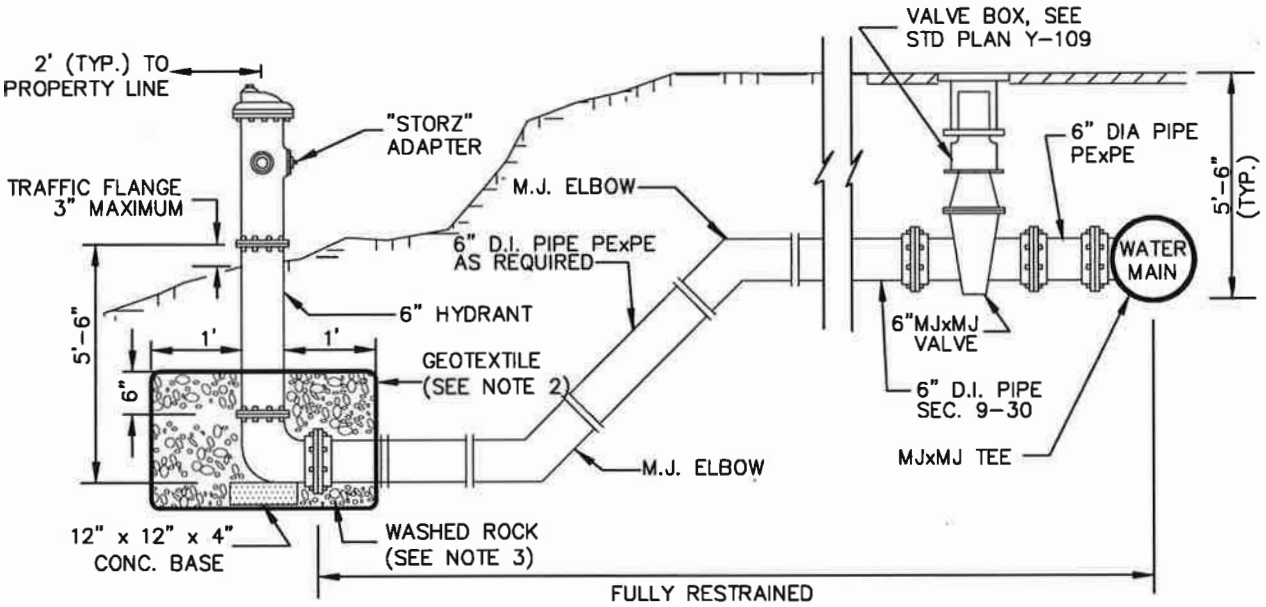

DEPRESSED OFFSET

NOTES:

1. *WATER DISTRIBUTION MATERIALS AND APPURTENANCES SHALL CONFORM TO SEC 9-30.*

2. *SEE SECTION 9-33 FOR WOVEN GEOTEXTILE FABRIC (MODERATE SURVIVABILITY, CLASS A). OVERLAP ALL FABRIC JOINTS 1'-6" MIN. WRAP AND SECURE FABRIC AROUND PIPE TO PREVENT MIGRATION OF FINES INTO GRAVEL ENVELOPE.*

3. *SEE SECTION 9-03.12(5) FOR GRAVEL BACKFILL FOR DRYWELLS.*

APPROVED BY		
ENGINEERING OPERATIONS MANAGER — KYLE TWOHIG	ADOPTED: 08/1991	**HYDRANT SETTING OFFSETS**
	REVISED: 02/2017	
	SUPERSEDES: 04/2012	
	SCALE: NTS	ENGINEERING SERVICES — CITY OF SPOKANE, WASHINGTON
CITY ENGINEER — DANIEL ALBERT BULLER, P.E.	DWG./REV BY: MB/MLD	STANDARD PLAN No. **Y-101A**

Back to Section Y - TOC

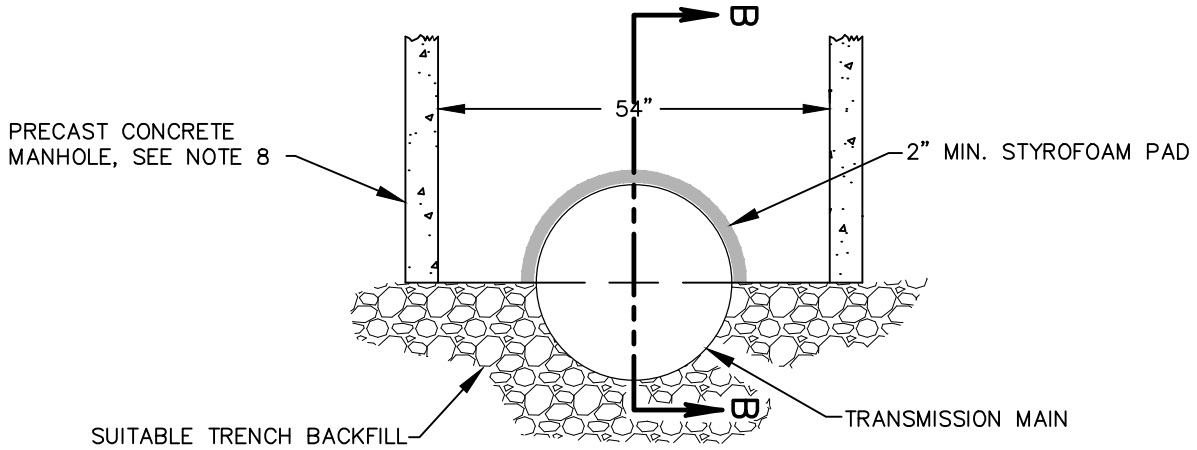

SECTION A–A

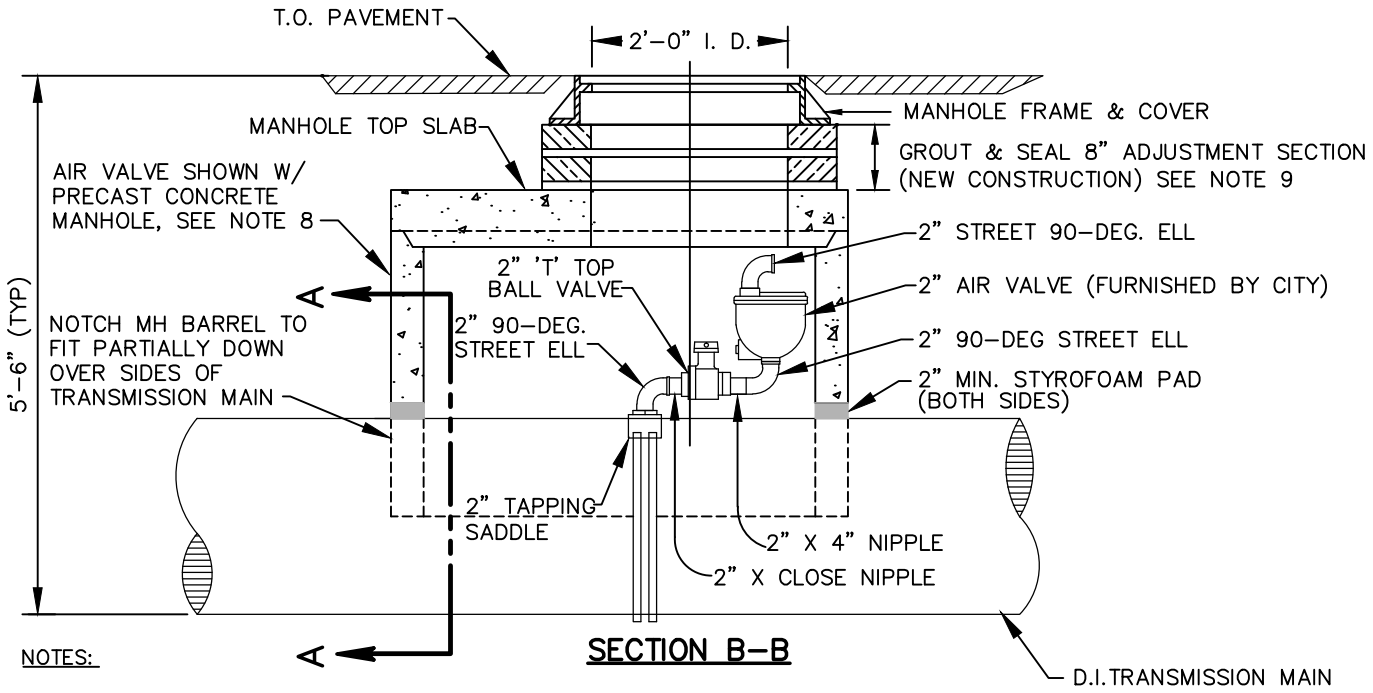

SECTION B–B

NOTES:

1. SEE SEC. 7–100 FOR VALVE CHAMBERS, & SEC. 9–12.4 FOR PRECAST CONCRETE MANHOLES.
2. SEE SECS. 7–12 & 9–30 FOR WATER FITTINGS.
3. SEE STD PLANS A–12 & A–13 FOR MANHOLE FRAME & COVER.
4. SEE STD PLAN Z–101 FOR MANHOLE – 48" & Z–102 FOR MANHOLE – 54".
5. SEE STD PLAN Z–108 FOR MANHOLE TOP SLAB REINFORCEMENT DETAILS.
6. TOP SLAB & BARREL JOINT(S) MAY BE EITHER TONGUE & GROOVE OR REVERSE TONGUE & GROOVE.
7. ADJUSTMENT SECTION, TOP SLAB, & BARREL JOINT(S) TO BE SEALED PER SECS. 7–05 & 9–04.
8. USE MANHOLE – 48" W/ CONCENTRIC CONE TOP WHEN VERTICAL CLEARANCE IS ADEQUATE. USE MANHOLE – 54" W/ TOP SLAB AS SHOWN ABOVE, WHEN VERTICAL CLEARANCE IS MINIMAL.
9. ADJUSTMENT SECTION HEIGHT FOR EXISTING STRUCTURES TO MATCH FIELD CONDITIONS AS REQ'D (3" MIN–16" MAX)

APPROVED BY ENGINEERING SERVICES DIRECTOR KYLE TWOHIG CITY ENGINEER DAN BULLER, P.E.	ADOPTED: _____ REVISED: 10/2019 SUPERSEDES: 04/2012 CHECKED BY: JAG SCALE: NTS REVISED BY: SRM/MLD	**2" AIR VALVE** **FOR DUCTILE IRON PIPE** SPOKANE ENGINEERING SERVICES CITY OF SPOKANE, WASHINGTON STANDARD PLAN No. **Y–102**

Back to Section Y - TOC

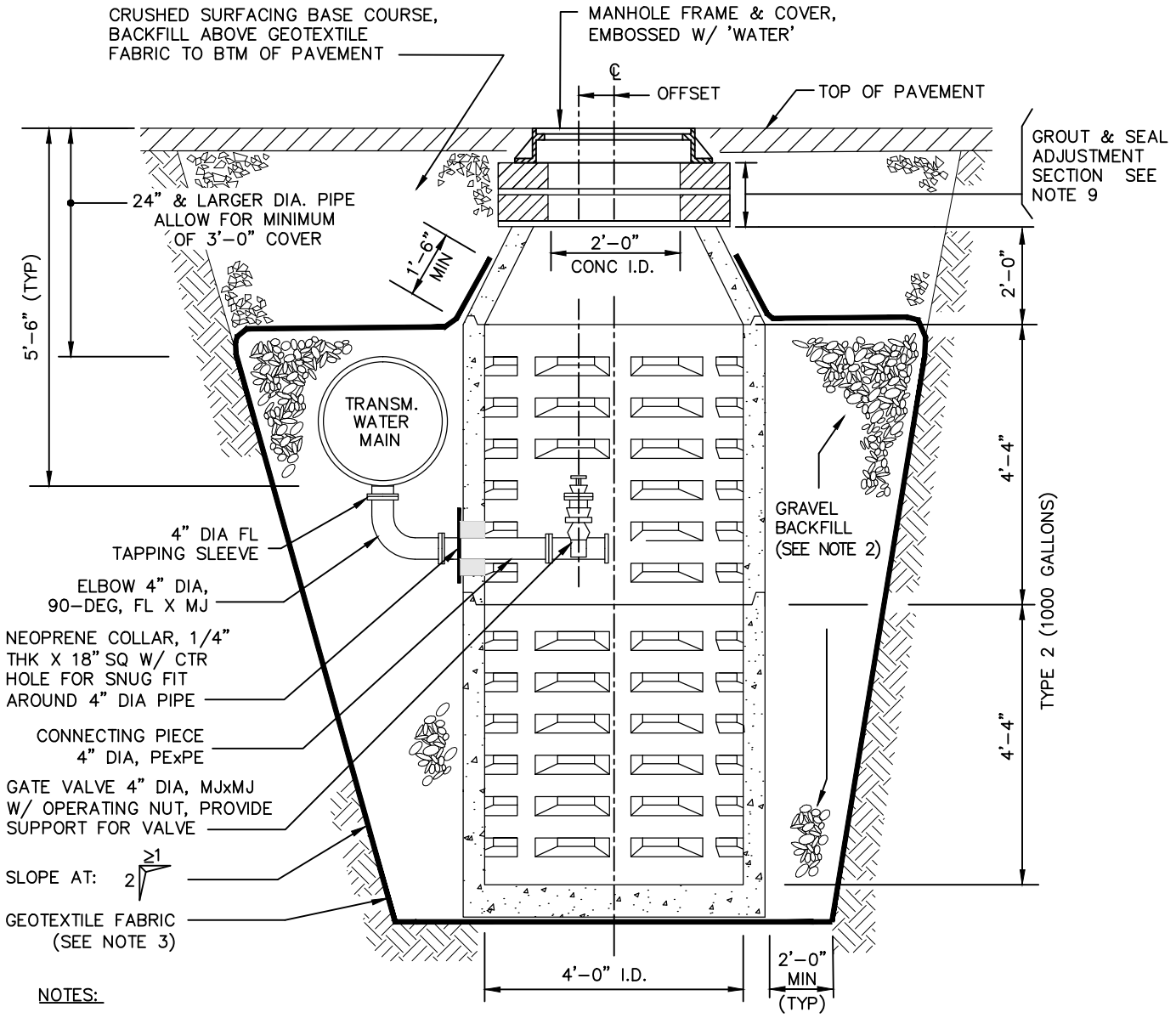

SECTION

NOTES:

1. SEE SEC 9-12 FOR PRECAST CONCRETE DRYWELLS.
2. SEE SEC 9-03.12(5) FOR GRAVEL BACKFILL FOR DRYWELLS.
3. SEE SEC 9-33 FOR WOVEN GEOTEXTILE FABRIC (MODERATE SURVIVABILITY, CLASS A). OVERLAP ALL FABRIC JOINTS 1'-6" MIN. WRAP & SECURE FABRIC AROUND PIPE TO PREVENT MIGRATION OF FINES INTO GRAVEL ENVELOPE.
4. SEE STD PLANS A-12 & A-13 FOR MANHOLE FRAME & COVER.
5. SEE STD PLANS B-102C & Z-118 FOR BASE & FOUNDATION DETAILS.
6. CONE & BARREL JOINTS MAY BE EITHER TONGUE & GROOVE OR REVERSE TONGUE & GROOVE.
7. ADJUSTMENT SECTION, CONE & BARREL JOINTS TO BE SEALED PER SEC 7-05.
8. ONE DRYWELL MAY SERVE MORE THAN ONE INTERIOR BLOW-OFF VALVE.
9. ADJUSTMENT SECTION HEIGHT FOR EXISTING STRUCTURES TO MATCH FIELD CONDITIONS AS REQUIRED SEE STANDARD PLAN A-8.
10. WATER DISTRIBUTION MATERIALS AND APPURTENANCES SHALL CONFORM TO SEC 9-30.
11. ALL JOINTS SHALL BE RESTRAINED JOINTS PER SEC 9-30.

APPROVED BY ENGINEERING SERVICES DIRECTOR KYLE TWOHIG CITY ENGINEER DAN BULLER, P.E.	ADOPTED: _____ REVISED: 10/2019 SUPERSEDES: 02/2017 SCALE: NTS DWG/REV. BY: SRM/MLD	**DRYWELL BLOW-OFF** **INTERIOR 4" GATE VALVE** SPOKANE ENGINEERING SERVICES CITY OF SPOKANE, WASHINGTON STANDARD PLAN No. **Y-103**

Back to Section Y - TOC

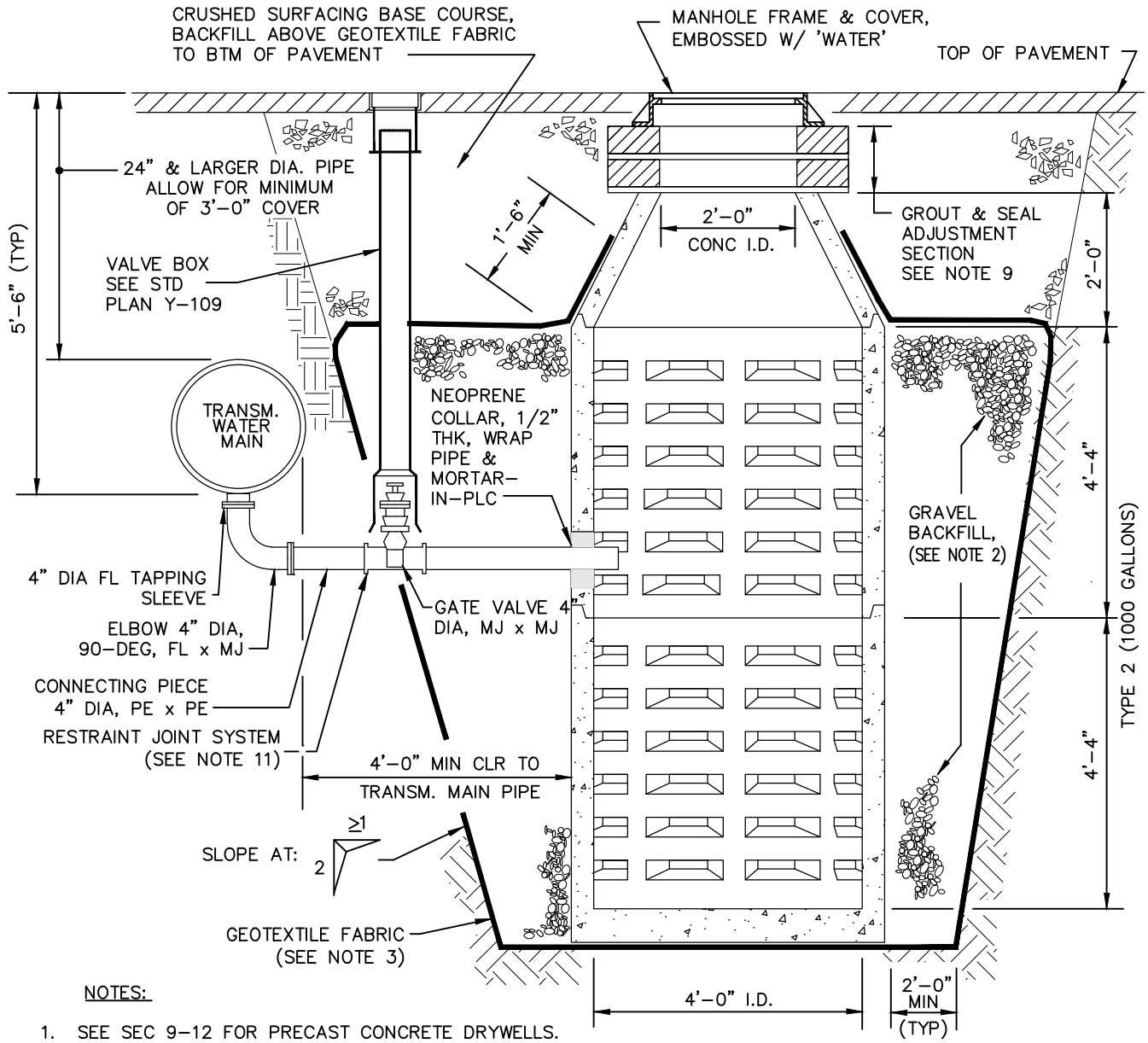

SECTION

NOTES:

1. SEE SEC 9-12 FOR PRECAST CONCRETE DRYWELLS.
2. SEE SEC 9-03.12(5) FOR GRAVEL BACKFILL FOR DRYWELLS.
3. SEE SEC 9-33 FOR WOVEN GEOTEXTILE FABRIC (MODERATE SURVIVABILITY, CLASS A). OVERLAP ALL FABRIC JOINTS 1 WRAP & SECURE FABRIC AROUND PIPE TO PREVENT MIGRATION OF FINES INTO GRAVEL ENVELOPE.
4. SEE STD PLANSA-12 & A-13 FOR MANHOLE FRAME & COVER.
5. SEE STD PLANS B-102C & Z-118 FOR BASE & FOUNDATION DETAILS.
6. CONE & BARREL JOINTS MAY BE EITHER TONGUE & GROOVE OR REVERSE TONGUE & GROOVE.
7. ADJUSTMENT SECTION, CONE & BARREL JOINTS TO BE SEALED PER SEC 7-05.
8. ONE DRYWELL MAY SERVE MORE THAN ONE INTERIOR BLOW-OFF VALVE.
9. ADJUSTMENT SECTION HEIGHT FOR EXISTING STRUCTURES TO MATCH FIELD CONDITIONS AS REQUIRED SEE STANDARD PLAN A-8.
10. WATER DISTRIBUTION MATERIALS AND APPURTENANCES SHALL CONFORM TO SEC 9-30.
11. ALL JOINTS SHALL BE RESTRAINED JOINTS PER SEC 9-30.

APPROVED BY

ENGINEERING SERVICES DIRECTOR — KYLE TWOHIG

CITY ENGINEER — DAN BULLER, P.E.

ADOPTED: 03/1992
REVISED: 10/2019
SUPERSEDES: 02/2017
SCALE: NTS
DWG/REV. BY: SRM/MLD

DRYWELL BLOW-OFF
EXTERIOR 4" GATE VALVE

SPOKANE

ENGINEERING SERVICES
CITY OF SPOKANE, WASHINGTON

STANDARD PLAN No. Y-103A

Back to Section Y - TOC

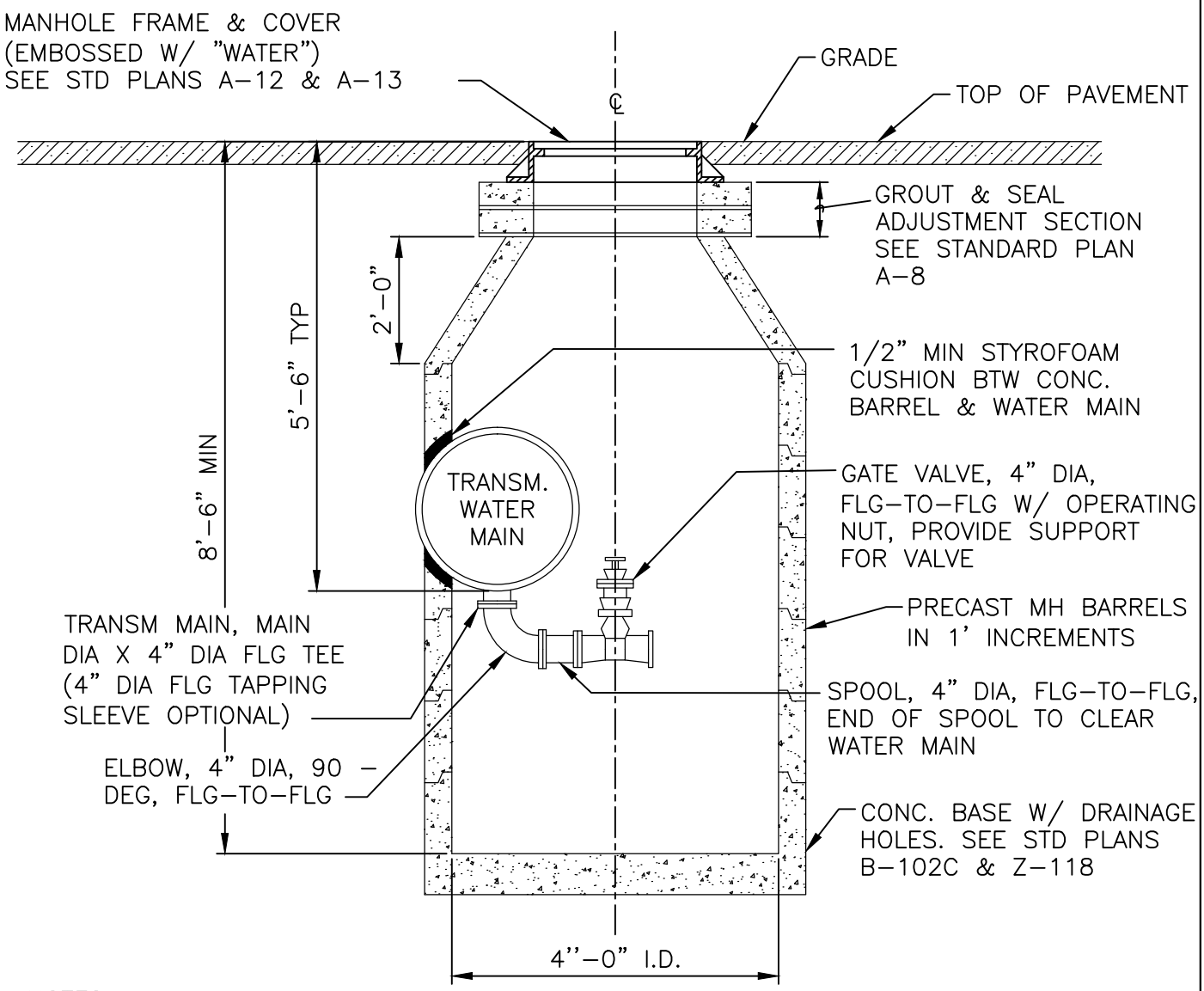

NOTES:

1. SEE SECTIONS 7-05 & 9-12.4 FOR PRECAST CONCRETE MANHOLES
2. SEE SECTIONS 7-12 & 9-30 FOR WATER FITTINGS.
3. SEE STD PLAN Z-109 FOR MANHOLE STEP DETAILS.
4. CONE & BARREL JOINTS MAY BE EITHER TONGUE & GROOVE OR REVERSE TONGUE & GROOVE.

APPROVED BY ENGINEERING SERVICES DIRECTOR — KYLE TWOHIG CITY ENGINEER — DAN BULLER, P.E.	ADOPTED: _____ REVISED: 10/2019 SUPERSEDES: 05/2017 CHECKED BY: JAG SCALE: NTS DWG/REV. BY: RLB/MLD	**MANHOLE BLOW-OFF** INTERIOR 4" GATE VALVE SPOKANE — ENGINEERING SERVICES CITY OF SPOKANE, WASHINGTON STANDARD PLAN No. **Y-104**

Back to Section Y - TOC

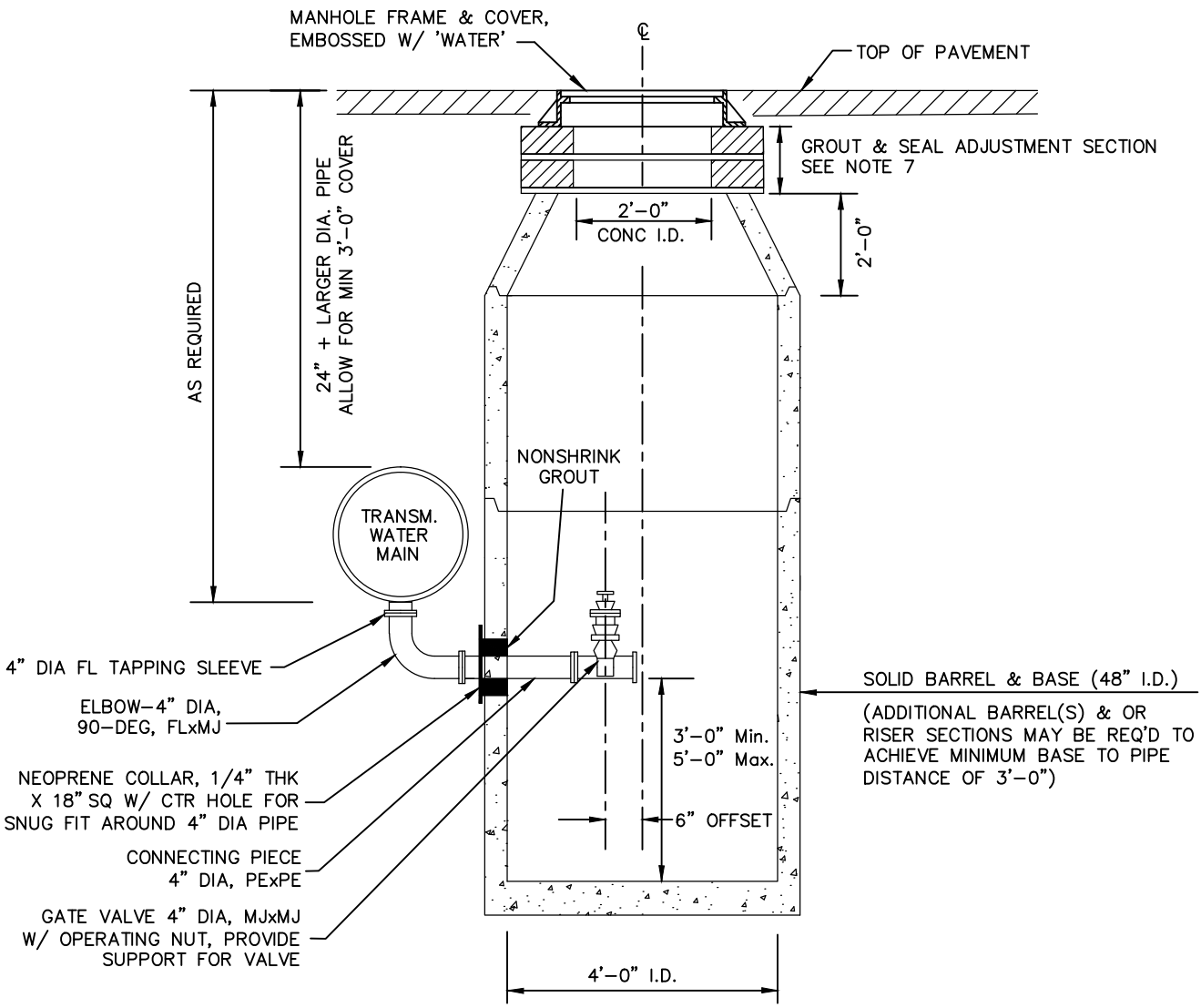

SECTION

NOTES:

1. SEE SEC 9-12 FOR PRECAST CONCRETE MANHOLES.
2. SEE STD PLANS A-12 & A-13 FOR MANHOLE FRAME & COVER.
3. SEE STD PLANS B-102C & Z-118 FOR BASE & FOUNDATION DETAILS.
4. CONE & BARREL JOINTS MAY BE EITHER TONGUE & GROOVE OR REVERSE TONGUE & GROOVE.
5. ADJUSTMENT SECTION, CONE & BARREL JOINTS TO BE SEALED PER SEC 7-05.
6. ONE MANHOLE MAY SERVE MORE THAN ONE INTERIOR BLOW-OFF VALVE.
7. ADJUSTMENT SECTION HEIGHT FOR EXISTING STRUCTURES TO MATCH FIELD CONDITIONS AS REQUIRED SEE STANDARD PLAN A-8.
8. WATER DISTRIBUTION MATERIAL AND APPURTENANCES SHALL CONFORM TO SEC 9-30.
9. ALL JOINTS SHALL BE RESTRAINED JOINTS PER SEC 9-30.

APPROVED BY ENGINEERING SERVICES DIRECTOR KYLE TWOHIG CITY ENGINEER DAN BULLER, P.E.	ADOPTED: _____ REVISED: 10/2019 SUPERSEDES: 04/2017 CHECKED BY: JTG SCALE: NTS DWG/REV. BY: LWK/MLD	PUMPER STYLE BLOW-OFF INTERIOR 4" GATE VALVE SPOKANE ENGINEERING SERVICES CITY OF SPOKANE, WASHINGTON STANDARD PLAN No. Y-105

Back to Section Y - TOC

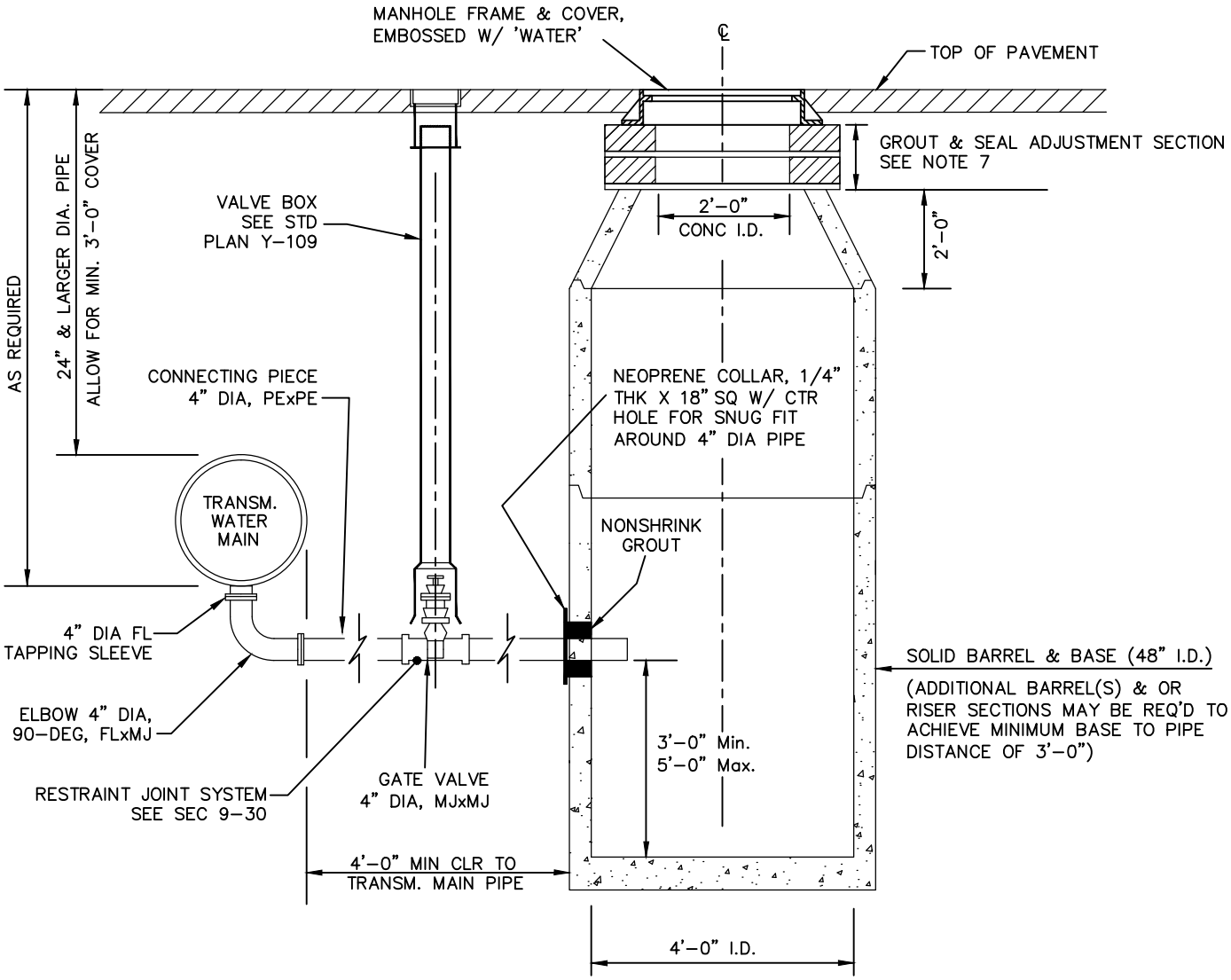

SECTION

NOTES:

1. SEE SEC 9-12 FOR PRECAST CONCRETE MANHOLES.
2. SEE STD PLANS A-12 & A-13 FOR MANHOLE FRAME & COVER.
3. SEE STD PLANS B-102C & Z-118 FOR BASE & FOUNDATION DETAILS.
4. CONE & BARREL JOINTS MAY BE EITHER TONGUE & GROOVE OR REVERSE TONGUE & GROOVE.
5. ADJUSTMENT SECTION, CONE & BARREL JOINTS TO BE SEALED PER SEC 7-05.
6. ONE MANHOLE MAY SERVE MORE THAN ONE INTERIOR BLOW-OFF VALVE.
7. ADJUSTMENT SECTION HEIGHT FOR EXISTING STRUCTURES TO MATCH FIELD CONDITIONS AS REQUIRED SEE STANDARD PLAN A-8
8. WATER DISTRIBUTION MATERIAL AND APPURTENANCES SHALL CONFORM TO SEC 9-30.
9. ALL JOINTS SHALL BE RESTRAINED JOINTS PER SEC 9-30.

APPROVED BY ENGINEERING SERVICES DIRECTOR — KYLE TWOHIG CITY ENGINEER — DAN BULLER, P.E.	ADOPTED: _____ REVISED: 10/2019 SUPERSEDES: 04/2017 CHECKED BY: JTG SCALE: NTS DWG/REV. BY: LWK/MLD	**PUMPER STYLE BLOW-OFF** EXTERIOR 4" GATE VALVE SPOKANE — ENGINEERING SERVICES CITY OF SPOKANE, WASHINGTON STANDARD PLAN No. **Y-105A**

Back to Section Y - TOC

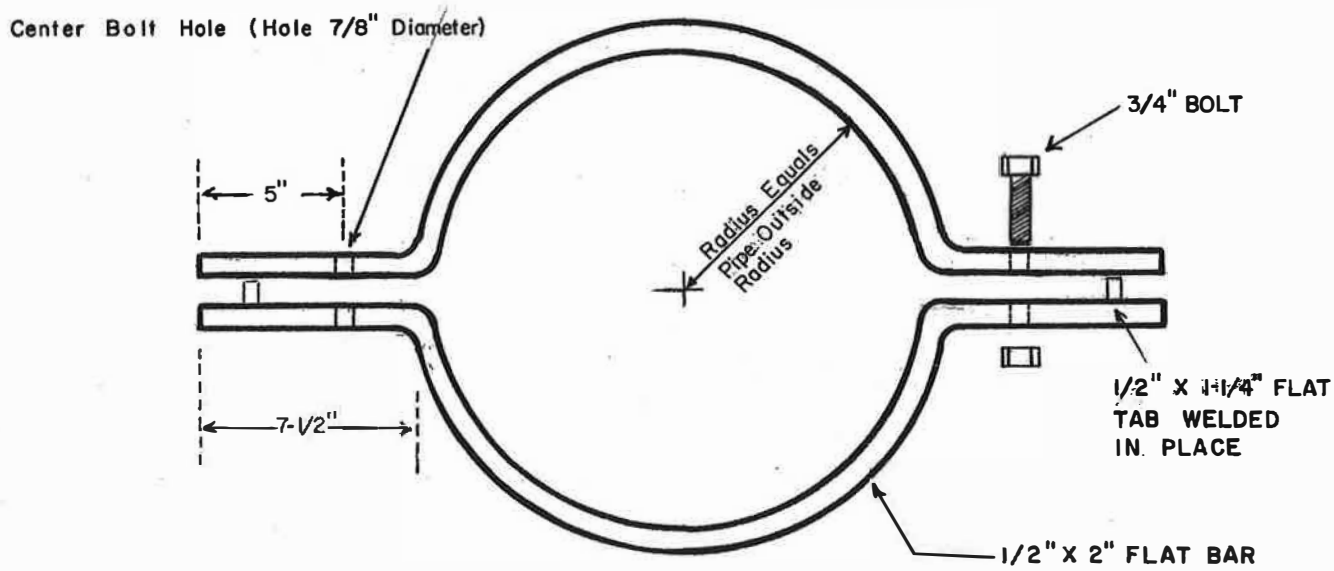

SIDE VIEW

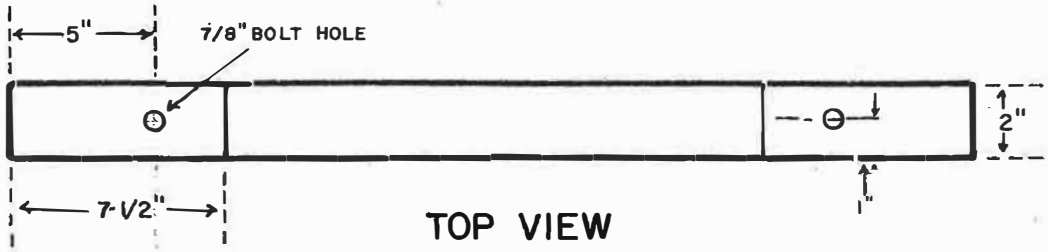

TOP VIEW

APPROVED BY	SCALE NONE ADOPTED 2-86	TYPICAL DUCTILE IRON PIPE CLAMP FOR PIPE UP TO 12" DIA.	
CITY ENGR. Brad W. Blegen CH. DES. ENGR. [illegible]	REVISED	DEPT. OF PUBLIC WORKS ENGR. DIVISION SPOKANE, WN.	STANDARD PLAN No. Y-108

Back to Section Y - TOC

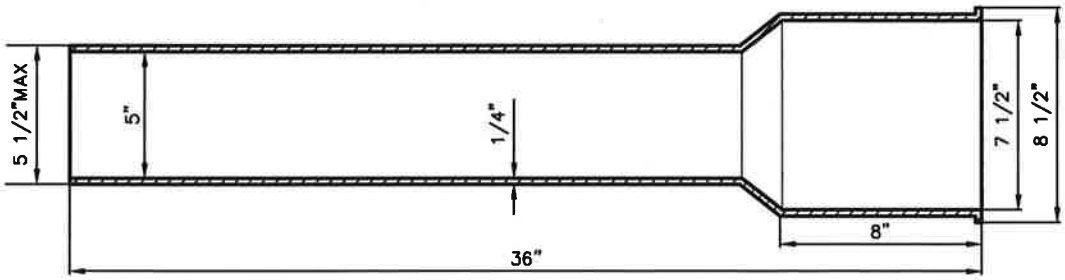

BOTTOM SECTION

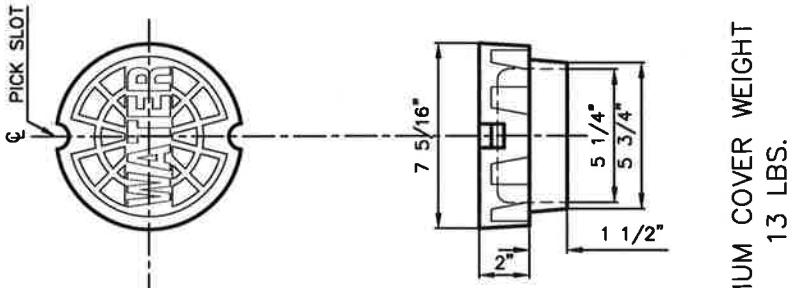

COVER

MINIMUM COVER WEIGHT
13 LBS.

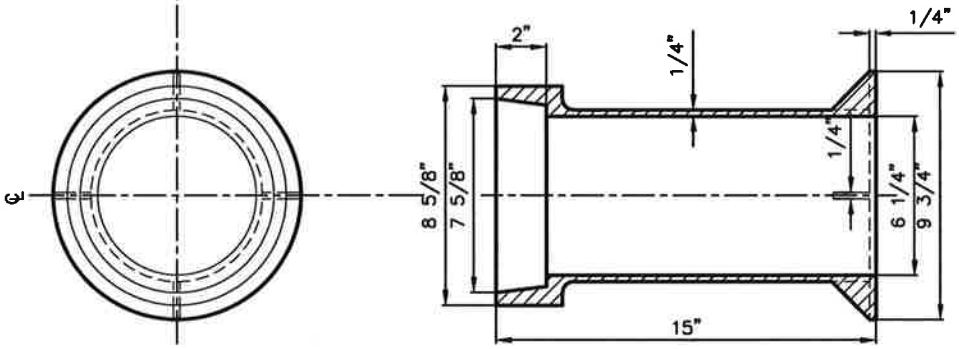

TOP SECTION

*OLYMPIC FOUNDRY MODEL 930 – 15" TOP, 5 1/4" HEAVY LID (OR APPROVED EQUAL)

APPROVED BY		
ENGINEERING OPERATIONS MANAGER KYLE TWOHIG	ADOPTED: 04/1988	CAST IRON VALVE BOX*
	REVISED: 02/2017	
	SUPERSEDES: 10/1998	
CITY ENGINEER DANIEL ALBERT BULLER, P.E.	SCALE: NOT TO SCALE	ENGINEERING SERVICES
	DWG./REV BY: DGB/MLD	CITY OF SPOKANE, WASHINGTON
		STANDARD PLAN No. Y–109

Back to Section Y - TOC

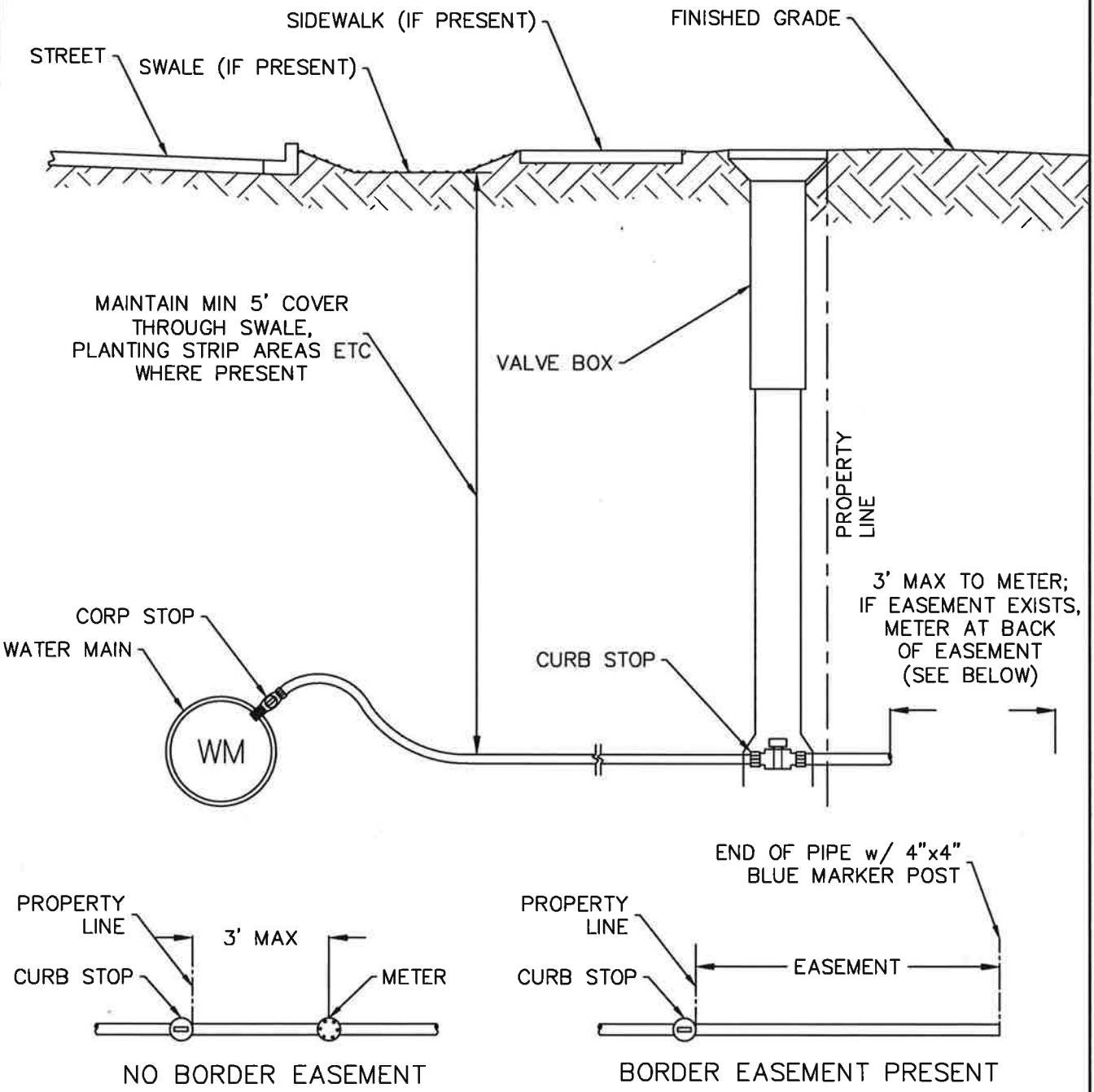

APPROVED BY ENGINEERING OPERATIONS MANAGER KYLE TWOHIG CITY ENGINEER DANIEL ALBERT BULLER, P.E.	ADOPTED: 01/2017 REVISED: SUPERSEDES: CHECKED BY: JTG SCALE: NTS DWG/REV. BY: ABM/MLD	**TYPICAL 1–2" WATER SERVICE** ENGINEERING SERVICES CITY OF SPOKANE, WASHINGTON STANDARD PLAN No. **Y–111**

Back to Section Y - TOC

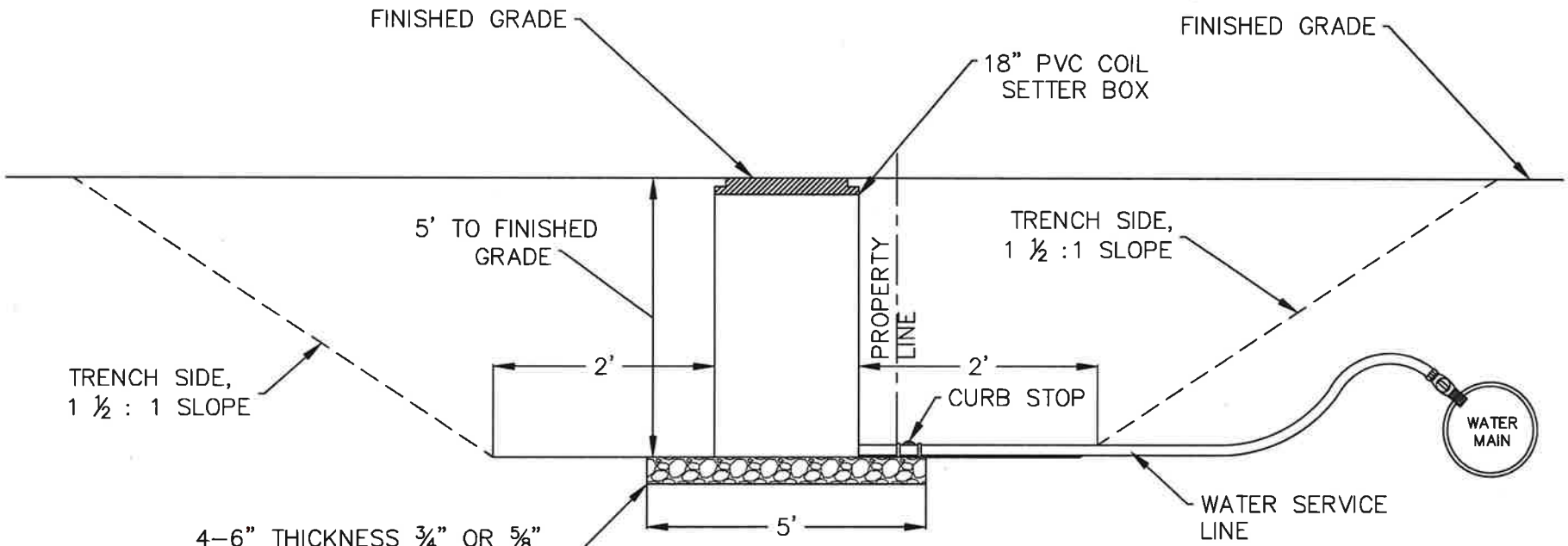

NOTES:
1) IF CURB STOP IS NOT AT 5' DEPTH FROM FINISHED GRADE, SERVICE WILL NEED TO BE EXCAVATED 3–4' TOWARD THE STREET TO FACILITATE RAISING OR LOWERING CURB STOP, BY CITY FORCES, TO 5' DEPTH
2) EXCAVATION TO BE DONE BY CONTRACTOR PER L&I REGULATIONS
3) BEDDING MUST BE ON SITE, FILL IN 1' LIFTS TO AVOID OVALING
4) 5/8", ¾", 1" T–10 METERS ONLY
5) BOX IS NOT TRAFFIC RATED, NOT TO BE INSTALLED IN SIDEWALKS, DRIVEWAYS OR STREETS
6) MUST BE AT FINISH GRADE FOR FINAL INSPECTION OR IT WILL NEED TO BE RESET

APPROVED BY		
ENGINEERING OPERATIONS MANAGER	KYLE TWOHIG	
CITY ENGINEER	DANIEL ALBERT BULLER, P.E.	

ADOPTED: 01/2017
REVISED:
SUPERSEDES:
CHECKED BY: JTG
SCALE: NTS
DWG/REV. BY: ABM/MLD

PVC WATER METER BOX TYPICAL INSTALLATION

SPOKANE
ENGINEERING SERVICES
CITY OF SPOKANE, WASHINGTON

STANDARD PLAN No. **Y–112**

Back to Section Y - TOC

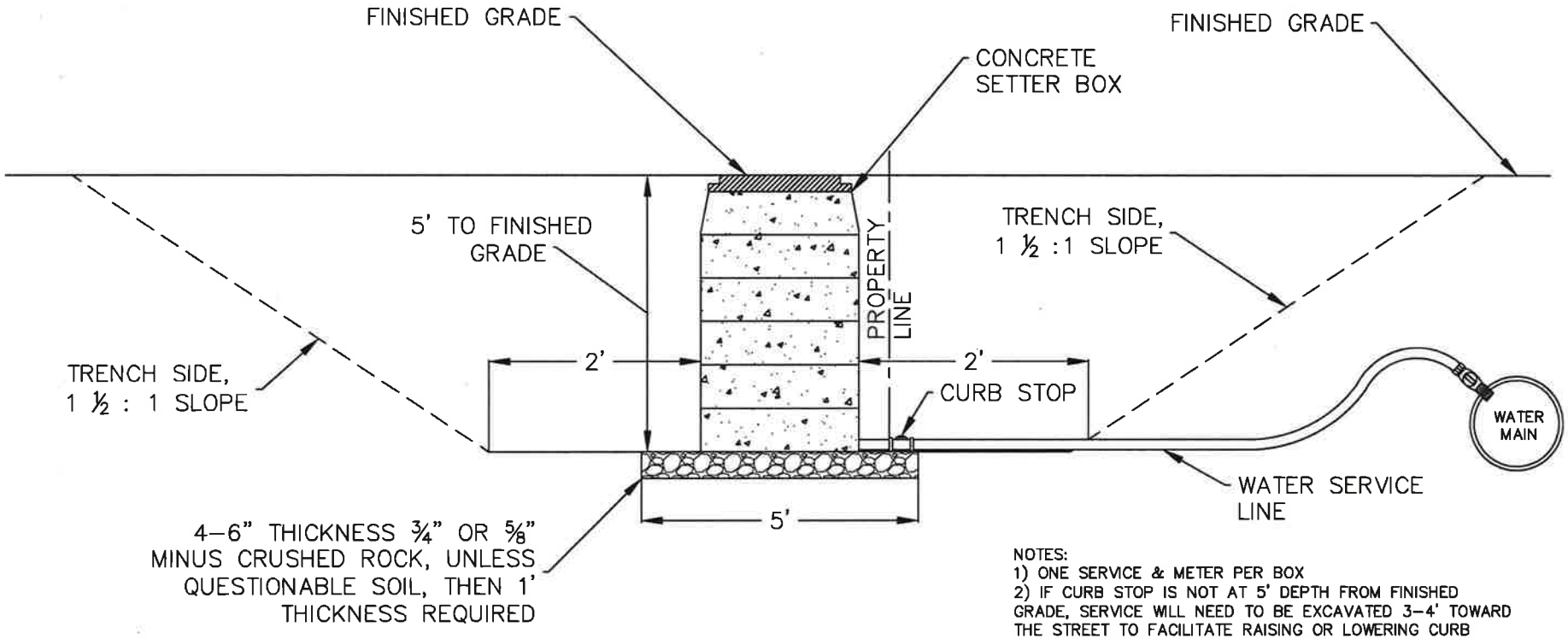

NOTES:
1) ONE SERVICE & METER PER BOX
2) IF CURB STOP IS NOT AT 5' DEPTH FROM FINISHED GRADE, SERVICE WILL NEED TO BE EXCAVATED 3–4' TOWARD THE STREET TO FACILITATE RAISING OR LOWERING CURB STOP, BY CITY FORCES, TO 5' DEPTH
2) EXCAVATION TO BE DONE BY CONTRACTOR PER L&I REGULATIONS
3) BEDDING MUST BE ON SITE
4) 5/8", 3/4", 1", 1 1/2" T–10 METER
5) 1 1/2" OR 2" HPT METER (NO IRR. IN BOX)
6) 1/2" CONDUIT MUST BE INSTALLED FROM BOX TO HOUSE OR BUILDING

APPROVED BY		
ENGINEERING OPERATIONS MANAGER	KYLE TWOHIG	
CITY ENGINEER	DANIEL ALBERT BULLER, P.E.	

ADOPTED: 01/2017
REVISED:
SUPERSEDES:
CHECKED BY: JTG
SCALE: NTS
DWG/REV. BY: ABM/MLD

CONCRETE WATER METER BOX TYPICAL INSTALLATION

SPOKANE
ENGINEERING SERVICES
CITY OF SPOKANE, WASHINGTON

STANDARD PLAN No. **Y–112A**

Back to Section Y - TOC

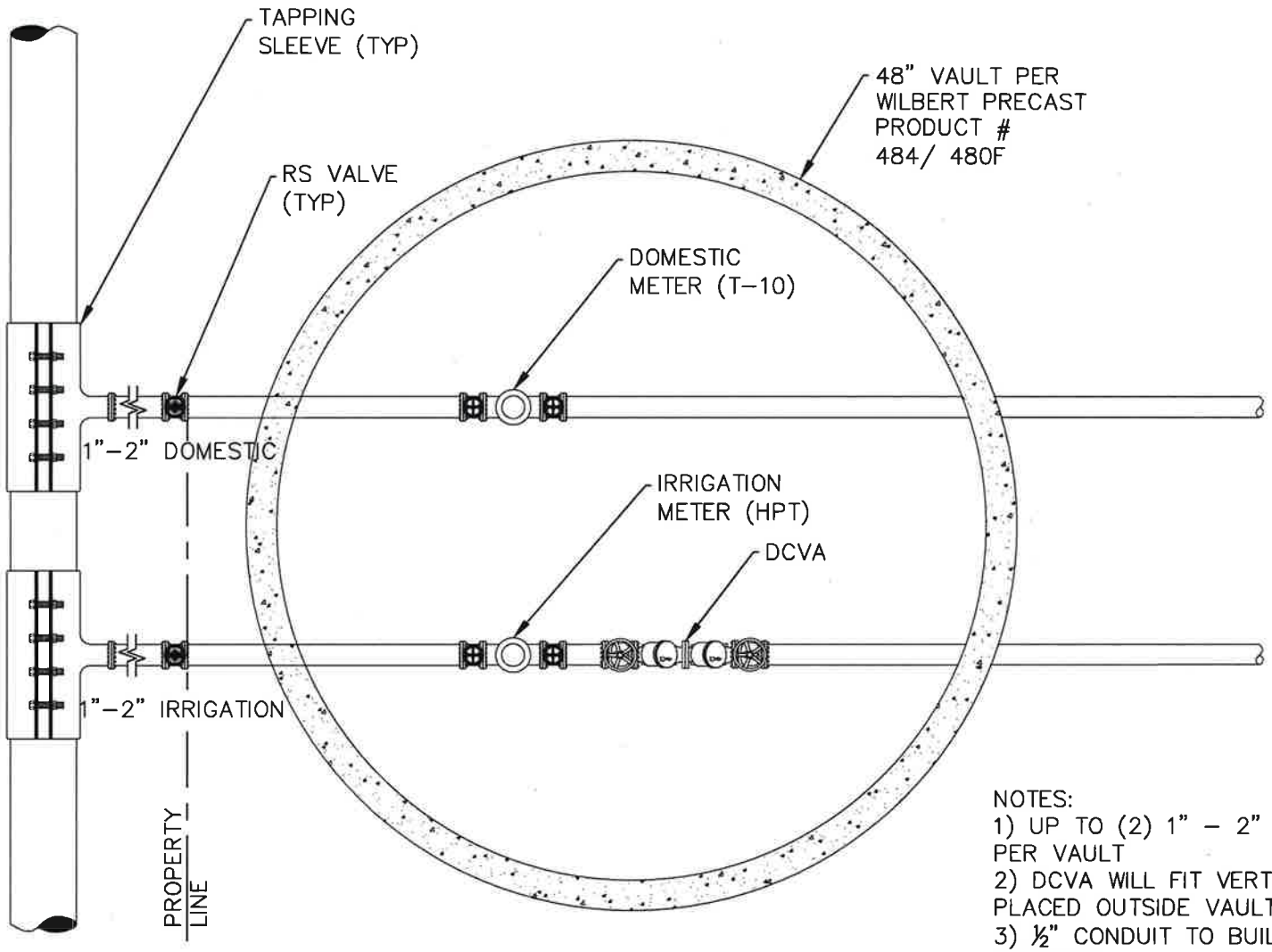

NOTES:
1) UP TO (2) 1" – 2" SERVICES & METERS PER VAULT
2) DCVA WILL FIT VERTICALLY OR MAY BE PLACED OUTSIDE VAULT IN IRRIGATION BOX
3) ½" CONDUIT TO BUILDING FOR WIRE IS REQUIRED

APPROVED BY ENGINEERING OPERATIONS MANAGER KYLE TWOHIG CITY ENGINEER DANIEL ALBERT BULLER, P.E.	ADOPTED: 01/2017 REVISED: SUPERSEDES: CHECKED BY: JTG SCALE: NTS DWG/REV. BY: ABM/MLD	**48" METER VAULT** SPOKANE ENGINEERING SERVICES CITY OF SPOKANE, WASHINGTON STANDARD PLAN No. Y-113

Back to Section Y - TOC

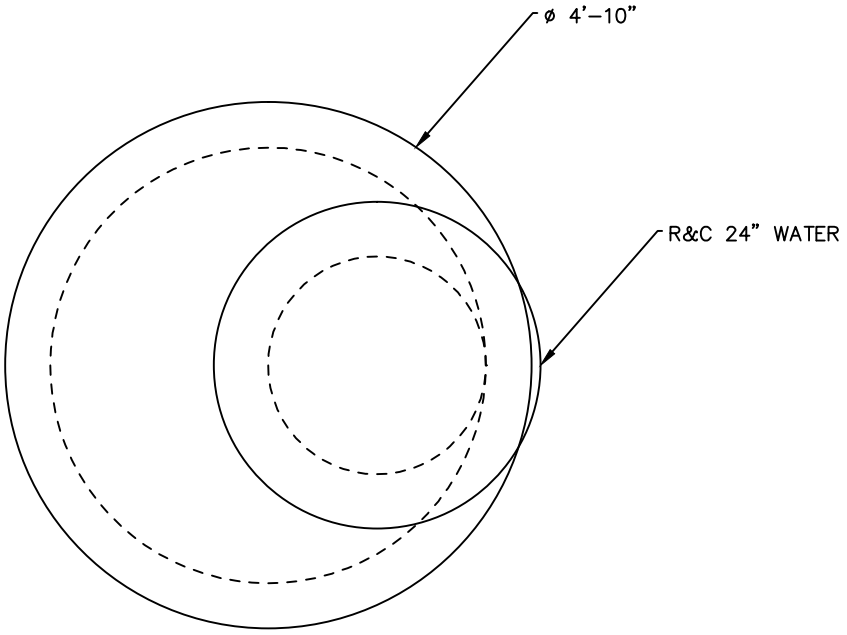

PLAN VIEW

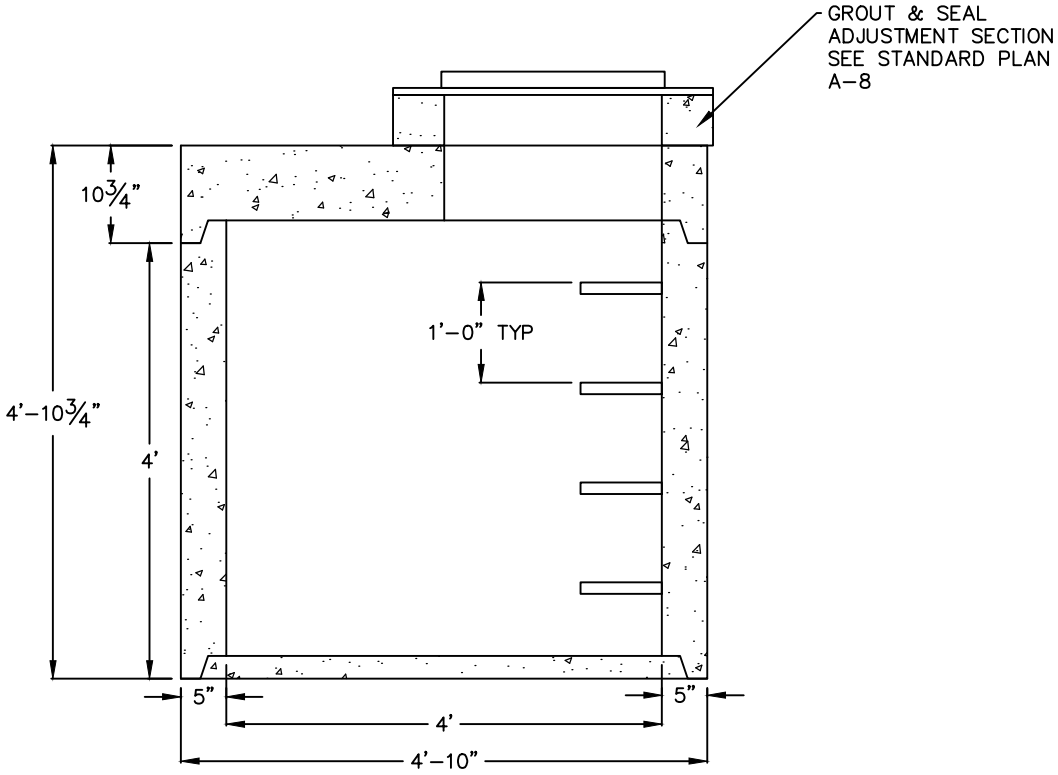

SECTION VIEW

APPROVED BY ENGINEERING SERVICES DIRECTOR KYLE TWOHIG CITY ENGINEER DAN BULLER, P.E.	ADOPTED: _____ REVISED: 10/2019 SUPERSEDES: 02/2017 CHECKED BY: JTG SCALE: NTS DWG/REV. BY: ABM/MLD	**48" PRECAST CONCRETE VAULT** SPOKANE ENGINEERING SERVICES CITY OF SPOKANE, WASHINGTON STANDARD PLAN No. **Y–114**

Back to Section Y - TOC

MINIMUM WATER SERVICE VAULT DIMENSIONS

3" DOMESTIC	6' X 8' X 6'6"
3" DOMESTIC W/DCVA	6' X 10' X 6'6"
3" IRRIGATION W/DCVA	6' X 10' X 6'6"
4" DOMESTIC	6' X 8' X 6'6"
4" DOMESTIC W/DCVA	6' X 10' X 6'6"
4" FIRE ONLY	6' X 7' X 6'6"
4" FIRE & DOMESTIC	6' X 12' X 6'6"
4" IRRIGATION W/DCVA	6' X 10' X 6'6"
6" DOMESTIC	6' X 8' X 6'6"
6" DOMESTIC W/DCVA	6' X 12' X 6'6"
6" FIRE ONLY	6' X 8' X 6'6"
6" FIRE & DOMESTIC	6' X 14' X 6'6"
6" IRRIGATION W/DCVA	6' X 12 X 6'6"
8" FIRE ONLY	6' X 10' X 6'6"
8" FIRE & DOMESTIC	6' X 16' X 6'6"
10" FIRE ONLY	6' X 10' X 6'6"
10" FIRE & DOMESTIC	6' X 16' X 6'6"

IF THERE ARE 2 SERVICES, ALL VAULTS WILL BE A MINIMUM OF 8' WIDE.

IF THERE ARE MORE THAN 2 SERVICES, VAULT DIMENSIONS MUST BE OBTAINED FROM THE TAPPING DEPARTMENT (509) 625-7847

ALL VAULTS WILL BE HEAVY DUTY TRAFFIC RATED

THESE VAULTS ARE MINIMUM INSIDE DIMENSIONS

APPROVED BY ENGINEERING OPERATIONS MANAGER KYLE TWOHIG CITY ENGINEER DANIEL ALBERT BULLER, P.E.	ADOPTED: 02/2017 REVISED: SUPERSEDES: SCALE: NTS DWG./REV BY: MB/MLD	**WATER SERVICE VAULT MINIMUM DIMENSIONS** ENGINEERING SERVICES CITY OF SPOKANE, WASHINGTON STANDARD PLAN No. **Y-115**

Back to Section Y - TOC

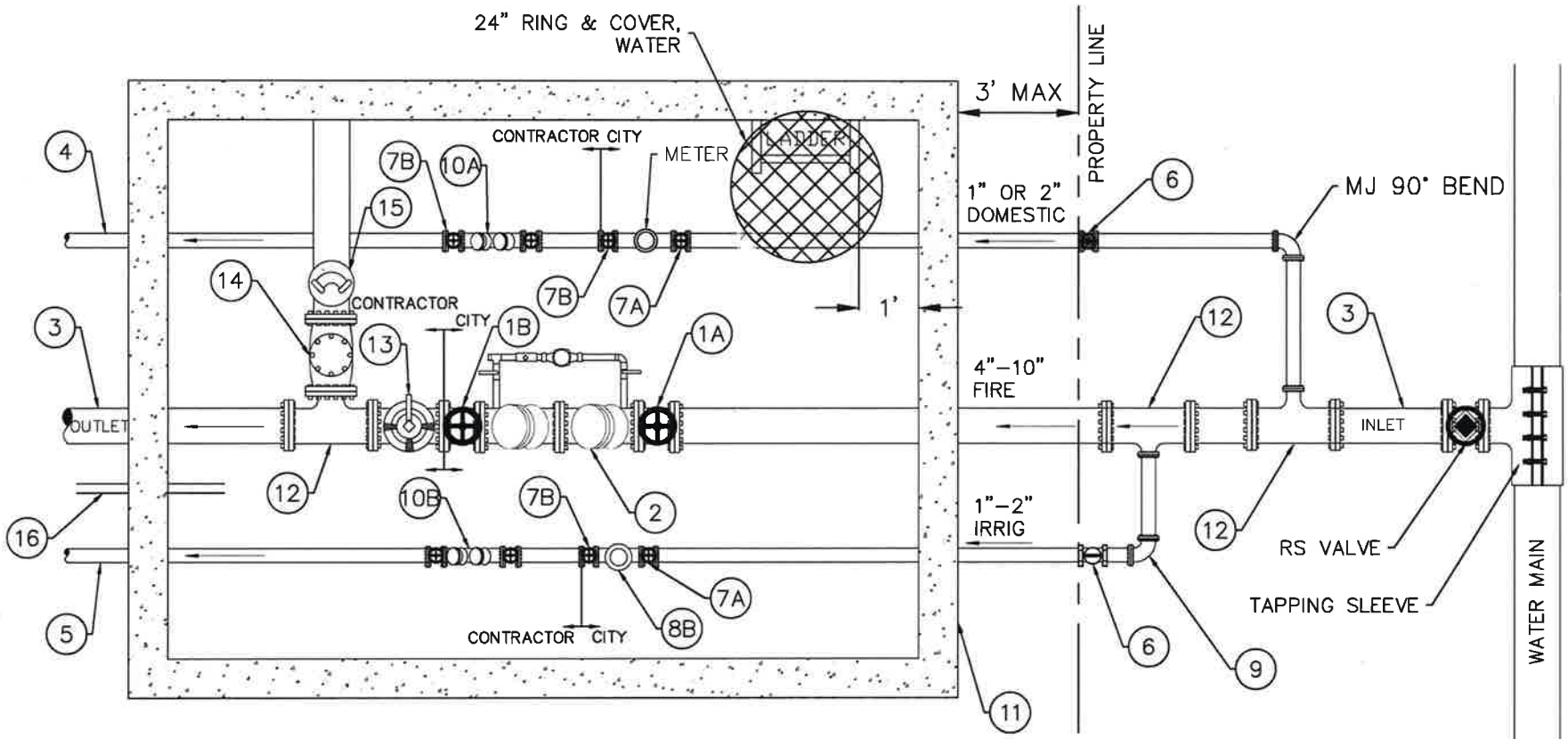

1A) FIRE LINE OSY, INLET
1B) FIRE LINE OSY, OUTLET
2) DCDVA W/ 5/8" T-10 METER
3) DUCTILE IRON PIPE
4) DOMESTIC SERVICE
5) IRRIGATION SERVICE
6) CURB STOP
7A) INLET VALVE, DOMESTIC/IRRIGATION
7B) OUTLET VALVE, DOMESTIC/IRRIGATION
8A) NEPTUNE TRUFLOW METER
8B) IRRIGATION METER
9) ELBOW
10A) DCVA ON ALL COMMERCIAL APPLICATIONS AND RESIDENTIAL WHERE REQUIRED
10B) BACKFLOW ASSEMBLY, IRRIGATION
11) VAULT (PER Y-115)
12) TEE
13) POST INDICATOR (THROUGH VAULT)
14) CHECK WITH BALL DRIP
15) PUMPER CONNECTION (FDC) (THROUGH VAULT)
16) 1/2" ELECTRICAL CONDUIT FOR REMOTE READER, VAULT TO BUILDING, BOLLARD, ETC

EXCAVATION TO BE DONE BY CONTRACTOR PER L&I REGULATIONS

APPROVED BY		
ENGINEERING OPERATIONS MANAGER	KYLE TWOHIG	
CITY ENGINEER	DANIEL ALBERT BULLER, P.E.	

ADOPTED: 01/2017
REVISED:
SUPERSEDES:
CHECKED BY: JTG
SCALE: NTS
DWG/REV. BY: ABM/MLD

WATER METER VAULT SMALL

ENGINEERING SERVICES
CITY OF SPOKANE, WASHINGTON

STANDARD PLAN No. **Y-116**

Back to Section Y - TOC

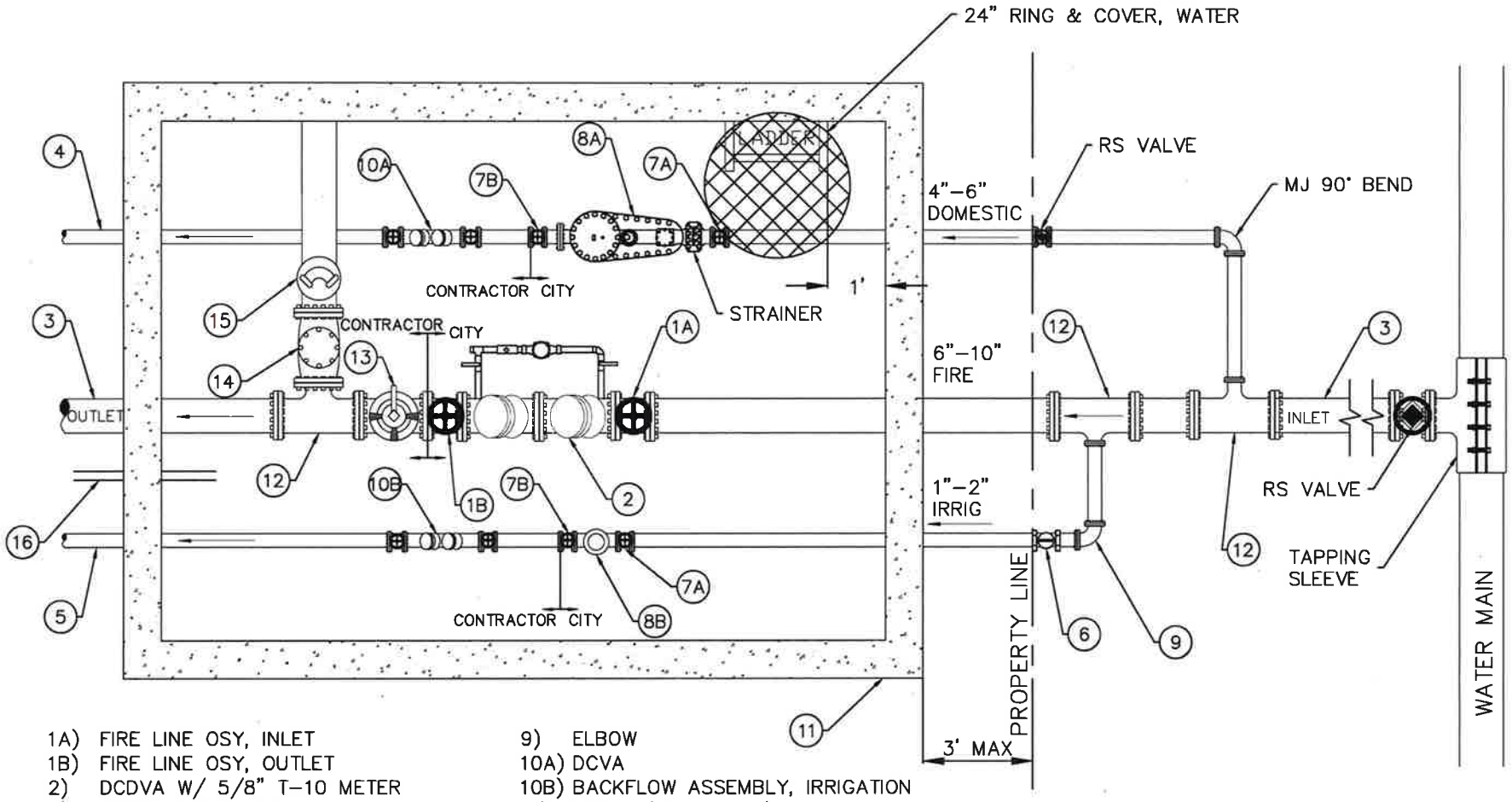

1A) FIRE LINE OSY, INLET
1B) FIRE LINE OSY, OUTLET
2) DCDVA W/ 5/8" T–10 METER
3) DUCTILE IRON PIPE
4) DOMESTIC SERVICE
5) IRRIGATION SERVICE
6) CURB STOP
7A) INLET VALVE, DOMESTIC/IRRIGATION
7B) OUTLET VALVE, DOMESTIC/IRRIGATION
8A) NEPTUNE TRUFLOW METER
8B) IRRIGATION METER
9) ELBOW
10A) DCVA
10B) BACKFLOW ASSEMBLY, IRRIGATION
11) VAULT (PER Y–115)
12) TEE
13) POST INDICATOR (THROUGH VAULT)
14) CHECK WITH BALL DRIP
15) PUMPER CONNECTION (FDC) (THROUGH VAULT)
16) 1/2" ELECTRICAL CONDUIT FOR REMOTE READER, VAULT TO BUILDING, BOLLARD, ETC

EXCAVATION TO BE DONE BY CONTRACTOR PER L&I REGULATIONS

APPROVED BY		
ENGINEERING OPERATIONS MANAGER	KYLE TWOHIG	
CITY ENGINEER	DANIEL ALBERT BULLER, P.E.	

ADOPTED: 01/2017
REVISED:
SUPERSEDES:
CHECKED BY: JTG
SCALE: NTS
DWG/REV. BY: ABM/MLD

WATER METER VAULT LARGE

SPOKANE
ENGINEERING SERVICES
CITY OF SPOKANE, WASHINGTON

STANDARD PLAN No. **Y–117**

Back to Section Y - TOC

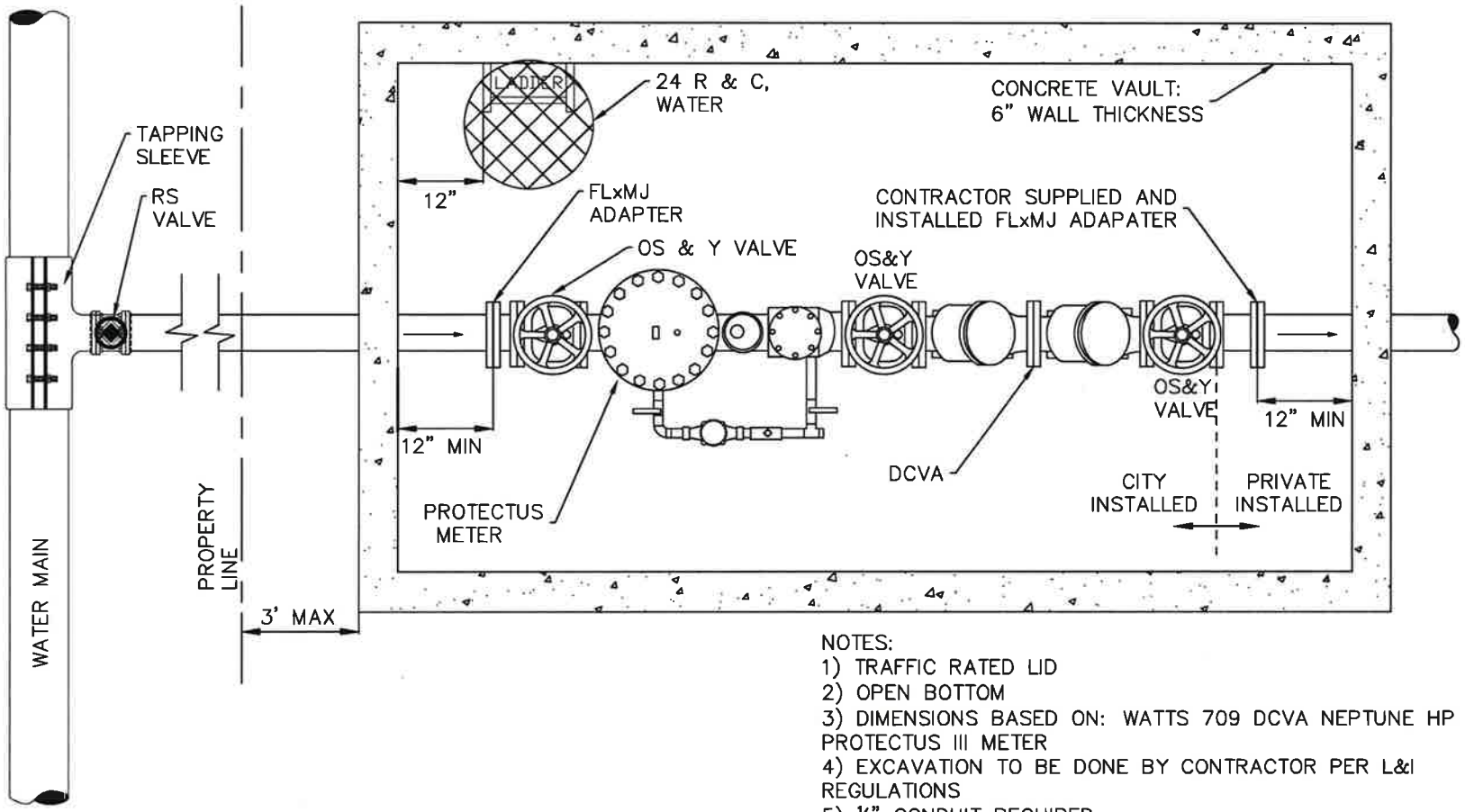

NOTES:
1) TRAFFIC RATED LID
2) OPEN BOTTOM
3) DIMENSIONS BASED ON: WATTS 709 DCVA NEPTUNE HP PROTECTUS III METER
4) EXCAVATION TO BE DONE BY CONTRACTOR PER L&I REGULATIONS
5) ½" CONDUIT REQUIRED
6) VAULT SIZE PER Y-115

APPROVED BY		
ENGINEERING OPERATIONS MANAGER	KYLE TWOHIG	
CITY ENGINEER	DANIEL ALBERT BULLER, P.E.	

ADOPTED: 01/2017
REVISED:
SUPERSEDES:
CHECKED BY: JTG
SCALE: NTS
DWG/REV. BY: ABM/MLD

DOMESTIC/FIRELINE 4"-10" SERVICE DOUBLE CHECK VALVE ASSEMBLY

SPOKANE
ENGINEERING SERVICES
CITY OF SPOKANE, WASHINGTON

STANDARD PLAN No. **Y-118**

Back to Section Y - TOC

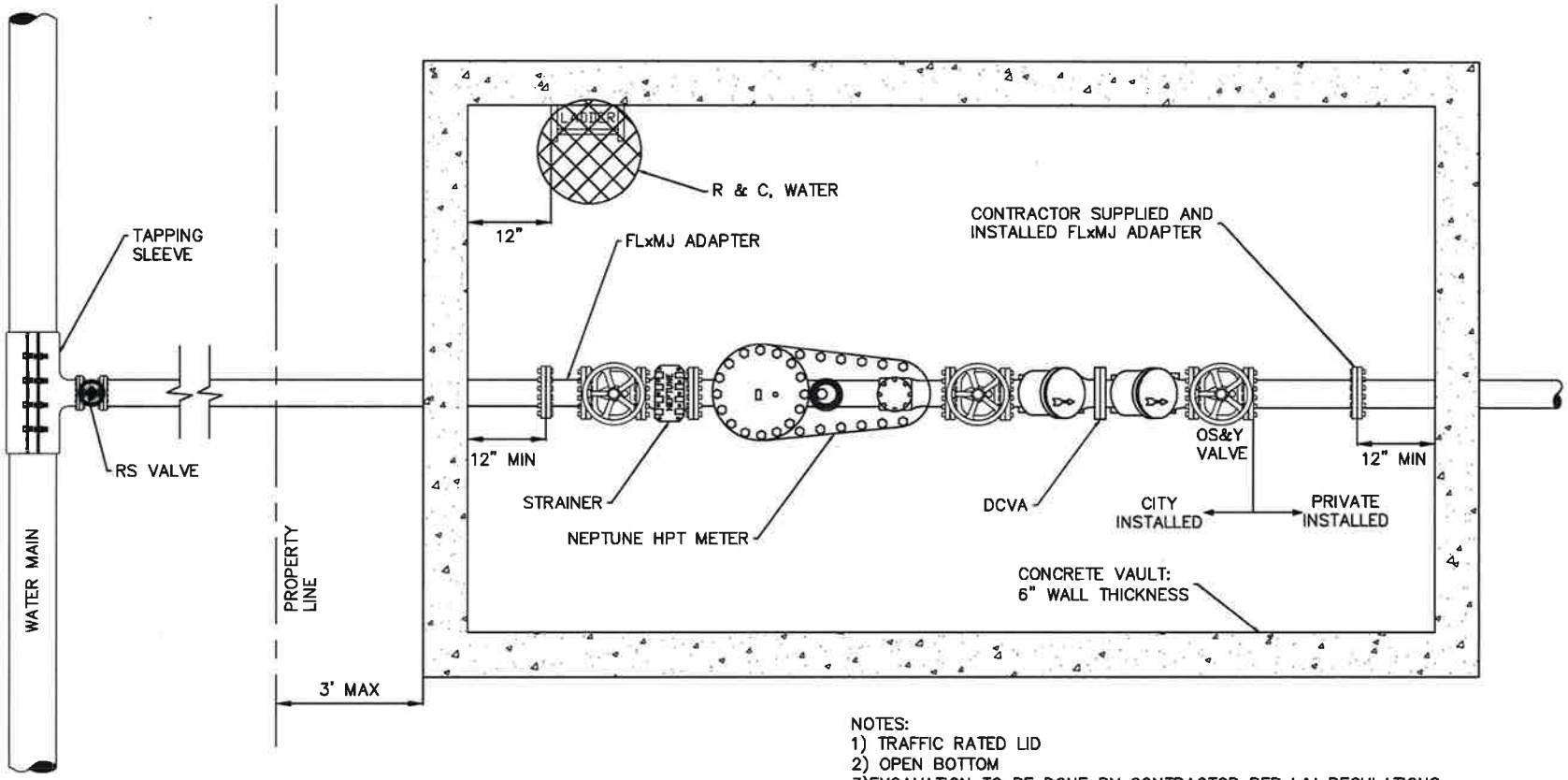

NOTES:
1) TRAFFIC RATED LID
2) OPEN BOTTOM
3)EXCAVATION TO BE DONE BY CONTRACTOR PER L&I REGULATIONS
4) ½" CONDUIT REQUIRED
5) VAULT SIZE PER Y-115

APPROVED BY	ADOPTED: 01/2017	IRRIGATION SERVICE WITH DCVA 3"-6"	
ENGINEERING OPERATIONS MANAGER KYLE TWOHIG	REVISED:		
	SUPERSEDES:		
	CHECKED BY: JTG	ENGINEERING SERVICES CITY OF SPOKANE, WASHINGTON	STANDARD PLAN No. Y-119
	SCALE: NTS		
CITY ENGINEER DANIEL ALBERT BULLER, P.E.	DWG/REV. BY: ABM/MLD		

Back to Section Y - TOC

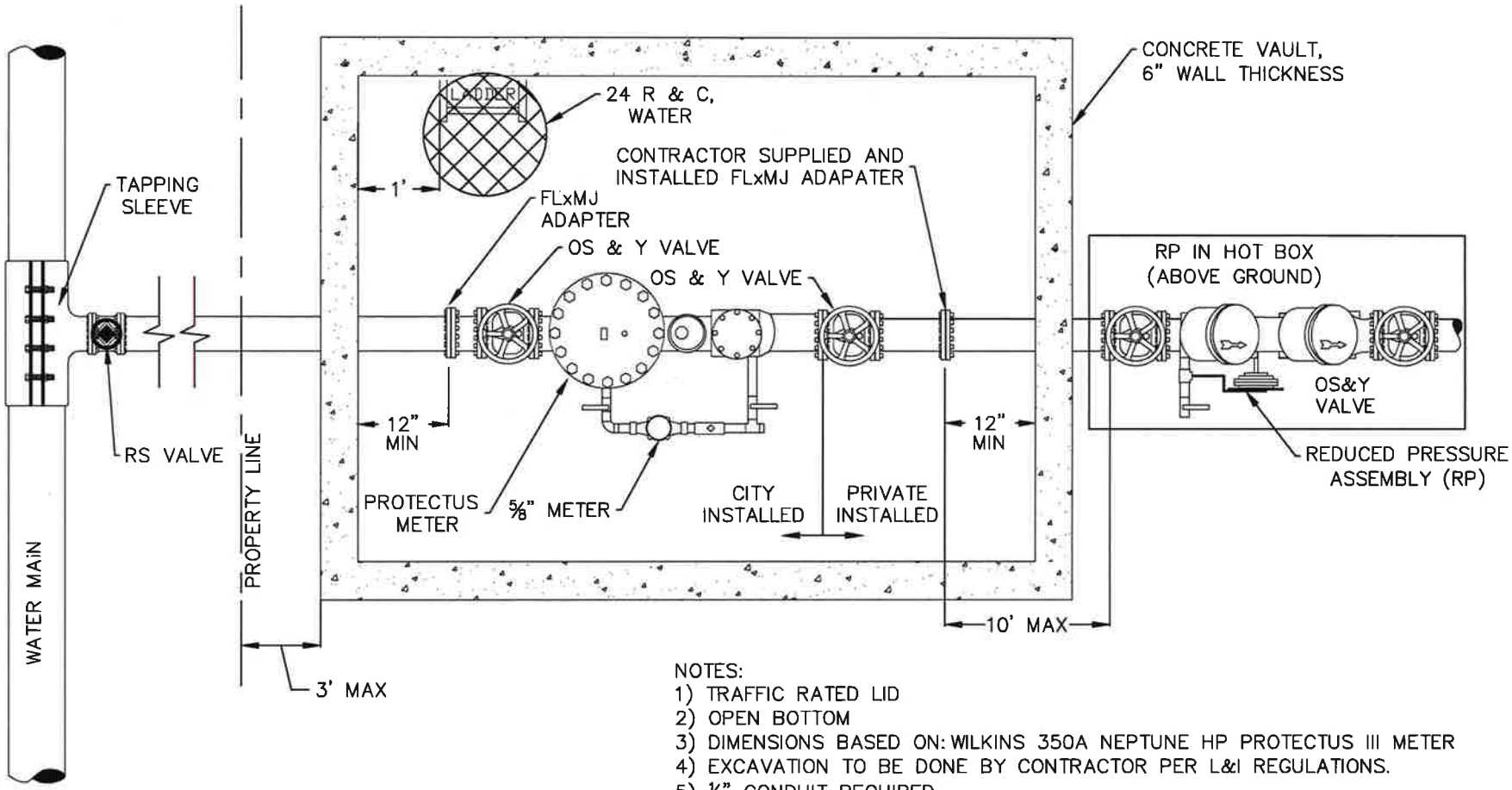

NOTES:
1) TRAFFIC RATED LID
2) OPEN BOTTOM
3) DIMENSIONS BASED ON: WILKINS 350A NEPTUNE HP PROTECTUS III METER
4) EXCAVATION TO BE DONE BY CONTRACTOR PER L&I REGULATIONS.
5) ½" CONDUIT REQUIRED
6) VAULT SIZE PER Y-115

APPROVED BY ENGINEERING OPERATIONS MANAGER KYLE TWOHIG CITY ENGINEER DANIEL ALBERT BULLER, P.E.	ADOPTED: 01/2017 REVISED: SUPERSEDES: CHECKED BY: JTG SCALE: NTS DWG/REV. BY: ABM/MLD	**DOMESTIC/FIRE LINE 4"-6", 8" OR 10" SERVICE REDUCED PRESSURE ASSEMBLY (PER WAC 246.290.490)** SPOKANE ENGINEERING SERVICES CITY OF SPOKANE, WASHINGTON STANDARD PLAN No. **Y-120**