TABLE OF CONTENTS

CITY OF SPOKANE STANDARD PLANS – SECTION A

B-101B = Revised Standard Plan
***W-108A = New Standard Plan
#A-1 = Renumbered Standard Plan

Back to Main TOC

Plan No.	Plan Title	Current Plan Date
#A-1	Utility Trench Backfill – Pipe Zone *(previously B-18C)*	2/17
#A-2	Utility Trench Backfill – Above Pipe Zone *(previously B-18D)*	4/12
#A-3	Utility Trench Backfill – Requirements using CDF *(previously B-18E)*	1/17
#A-4	Sewer Utility – Location and Construction Requirements *(previously W-110)*	5/07
#A-5	Water and Sewer Crossings *(previously W-111)*	1/09
#A-6	Underground Utility Location for Existing Streets *(previously W-112)*	11/18
#A-7	Underground Utility Location for New Developments *(previously W-113)*	11/18
#A-8	Adjustment Section – Grade Rings (Risers) *(previously B-123)*	1/17
#A-9	Casing / Carrier Pipe – Details *(previously Y-110)*	5/07
#A-10	Cut-Off Wall *(previously B-19)*	1/17
#A-11	Pipe Anchor *(previously B-117)*	6/92
#A-12	Manhole Frame and Cover *(previously B-112)*	5/07
#A-13	Manhole Frame and Cover – 3 Point Bolt Down *(previously B-112A)*	5/07

Back to Section A - TOC

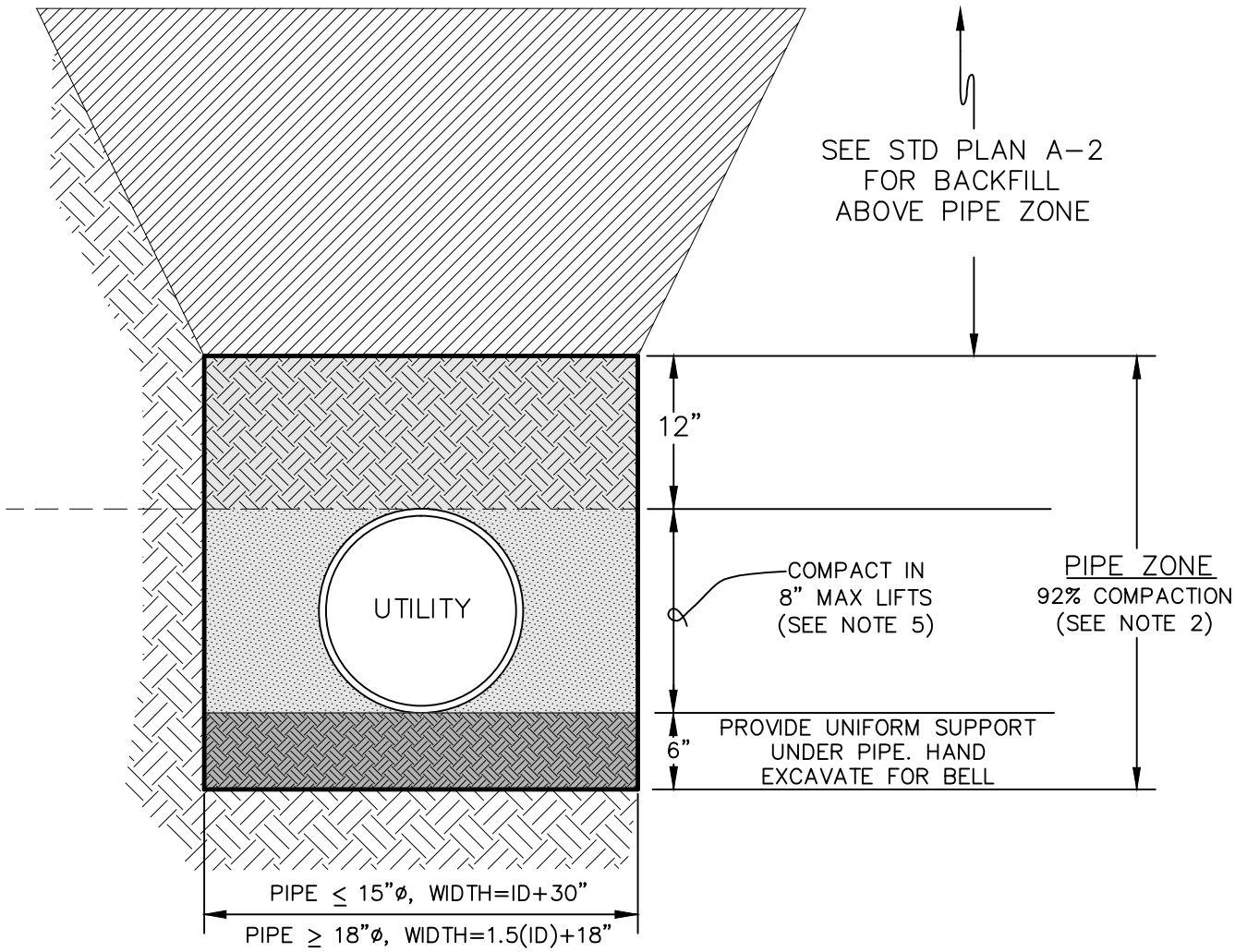

NOTES:

1. ALL MATERIAL IN PIPE ZONE INCLUDING 6" BENEATH THE PIPE SHALL CONFORM TO SEC 9-03.12(3) FOR SAND OR NATIVE MATERIAL EXCEPT AS FOLLOWS:

   a) IF ROCK OR GROUND WATER IS PRESENT, PIPE ZONE MATERIAL SHALL BE CSTC PER SEC 9-03.9(3).

   b) FOR RIGID SEWERS, PIPE ZONE MATERIAL ABOVE THE SPRING LINE MAY EITHER BE PER SEC 9-03.12(3), SAND OR NATIVE, OR 9-03.14(1), GRAVEL BORROW, EXCEPT THAT MAX MATERIAL SIZE SHALL BE 1-IN PER 1-FT OF PIPE DIAMETER UP TO A 2" MAX.

2. COMPACTION METHODS IN PIPE ZONE SHALL BE PER SECTION 7-09.3(9).

3. REFER TO 7-08.3(1)C FOR ADDITIONAL REQUIREMENTS.

4. WHERE TRENCH EXCAVATION IS PAID SEPARATELY, PAYMENT LIMITS SHALL BE PER SEC 2-09.4.

5. BEDDING TO BE INSTALLED PER SECTION 7-09.3(9). A LIFT LAYER UP TO A MAXIMUM OF 18 INCHES MAY BE APPROVED BY THE ENGINEER.

APPROVED BY ENGINEERING OPERATIONS MANAGER KYLE TWOHIG CITY ENGINEER DANIEL ALBERT BULLER, P.E.	ADOPTED: 02/1986 REVISED: 02/2017 SUPERSEDES: 09/2010 CHECKED BY: JAG SCALE: NTS DWG/REV. BY: SRM/MLD	UTILITY TRENCH BACKFILL **PIPE ZONE** SPOKANE ENGINEERING SERVICES CITY OF SPOKANE, WASHINGTON STANDARD PLAN No. **A-1**

Back to Section A - TOC

BACKFILL FOR UTILITY TRENCHES

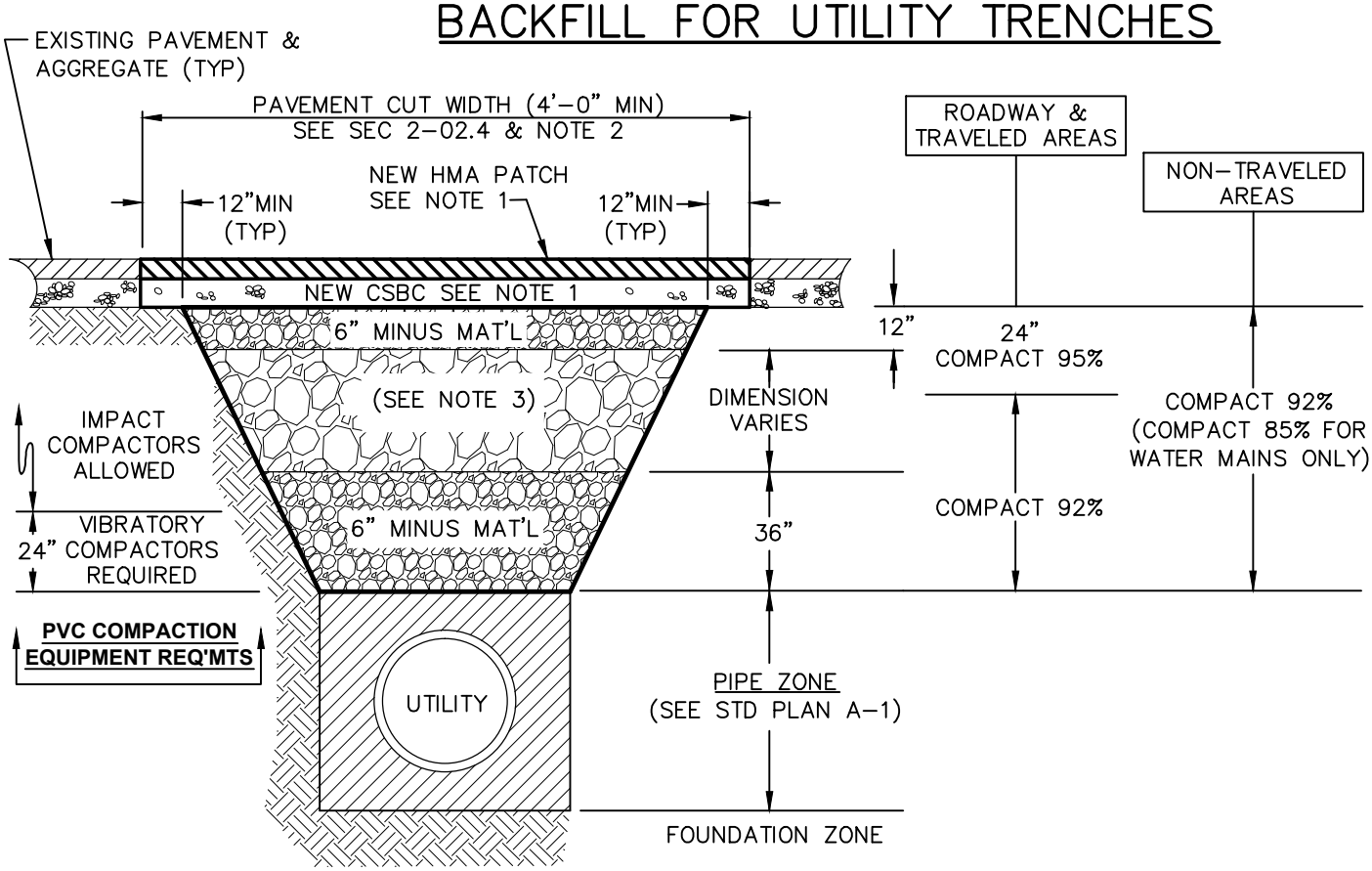

NOTES:

1. REPLACE HOT MIX ASPHALT (HMA) PAVEMENT & CRUSHED BASE PER STD PLANS W-108 & W-109.
2. SEE CITY OF SPOKANE (COS) PAVEMENT CUT POLICY IN THE COS DESIGN STDS, APPENDIX 'F' FOR ADD'NL REQ'MTS.
3. WATER LINES REQUIRE 6" MINUS MAT'L FOR THE ENTIRE BACKFILL. 12" MINUS MAT'L MAY BE USED FOR OTHER UTILITIES.
4. COMPACTION ABOVE THE PIPE ZONE SHALL BE MEASURED PER SEC 2-03.3(14)D. FOR ROADWAY & TRAVELED AREAS COMPACT TOP 2-FT IN 4" MAX LIFTS. COMPACT BELOW TOP 2-FT TO TOP OF PIPE ZONE IN 8" MAX LIFTS. FOR NON-TRAVELED AREAS COMPACT IN 8" MAX. LIFTS. ENGINEER MAY WAIVER THE 92% COMPACTION TO A LESSER VALUE FOR GRASS SWALES OR OTHER PLANTING AREAS.
5. FOR DEVIATION FROM LIFT THICKNESS, SEE SEC 7-08.3(3) FOR SEWER/STORM & SEC 7-09.3(11) FOR WATER UTILITIES.
6. TRENCH EXCAVATION MATERIALS SHALL BE USED FOR BACKFILL IF MATERIALS MEET GRADUATION REQ'MTS ABOVE. IMPORTED BACKFILL SHALL MEET THE REQ'MTS OF SEC 9-03.14(1), GRAVEL BORROW.
7. CONTROLLED DENSITY FILL (CDF) PER SEC 2-09.3(1)E, MAY BE USED IN LIEU OF NATIVE BACKFILL WHERE IT IS NOT PRACTICAL TO COMPACT BACKFILL TO THE REQ'D DENSITY. SUCH USE SHALL BE PRE-APPROVED BY THE ENGINEER. SEE STD PLAN A-3 FOR CDF BACKFILL REQ'MTS.

APPROVED BY DIRECTOR, ENGINEERING SERVICES P. MIKE TAYLOR, P.E. PRINCIPAL ENGINEER, DESIGN GARY S. NELSON, P.E.	ADOPTED: 2/1990 REVISED: 09/2010 SUPERSEDES: 01/2008 CHECKED BY: JAG SCALE: NTS DWG/REV. BY: SRM/MBM	UTILITY TRENCH BACKFILL ABOVE PIPE ZONE SPOKANE ENGINEERING SERVICES CITY OF SPOKANE, WASHINGTON STANDARD PLAN No. A-2

Back to Section A - TOC

CDF BACKFILL FOR UTILITY TRENCHES

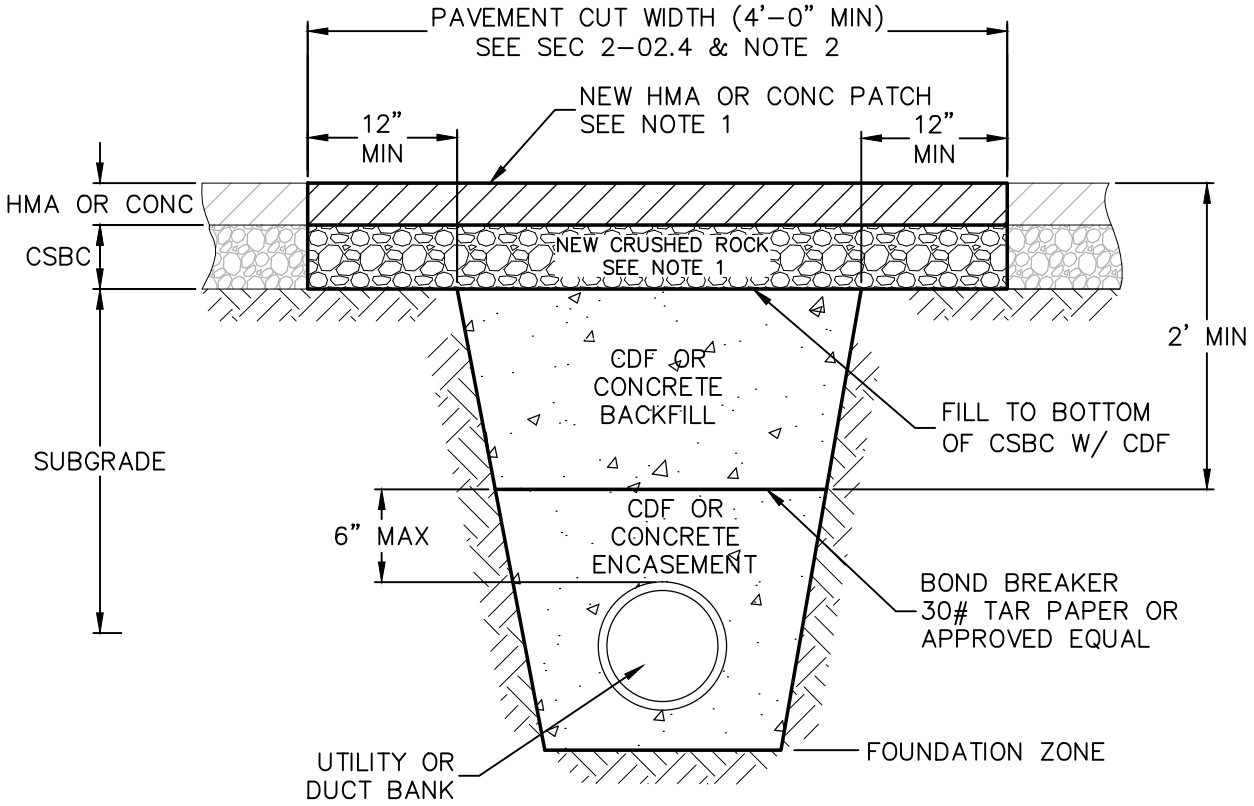

NOTES:

1. REPLACE HOT MIX ASPHALT (HMA) OR CONCRETE PAVEMENT PER CITY STANDARD PLANS W–102, W–108, & W–109.
2. SEE CITY OF SPOKANE (COS) PAVEMENT CUT POLICY IN THE COS DESIGN STANDARDS, APPENDIX 'F' FOR ADDITIONAL REQUIREMENTS.
3. BEDDING MATERIAL PER SEC 7–08.3(1)C MAY BE USED AS AN ALTERNATIVE TO CDF & CAPPED W/ CDF TO SERVE AS A LOCATION MARKER FOR THE UTILITY.
4. 30# TAR PAPER SHALL BE PLACED THE FULL LENGTH AND WIDTH OF A UTILITY TRENCH WHEN THE UTILITY IS ENCASED IN CDF OR CONCRETE AND THE REMAINDER OF THE TRENCH IS BACKFILLED WITH CDF OR CONCRETE.

APPROVED BY		
ENGINEERING OPERATIONS MANAGER — KYLE TWOHIG	ADOPTED: 04/2004	UTILITY TRENCH BACKFILL
	REVISED: 01/2017	REQUIREMENTS USING CDF OR CONCRETE
	SUPERSEDES: 04/2012	
	CHECKED BY: JAG	ENGINEERING SERVICES
	SCALE: NTS	CITY OF SPOKANE, WASHINGTON
CITY ENGINEER — DANIEL ALBERT BULLER, P.E.	DWG/REV. BY: TSS/MLD	STANDARD PLAN No. A–3

Back to Section A - TOC

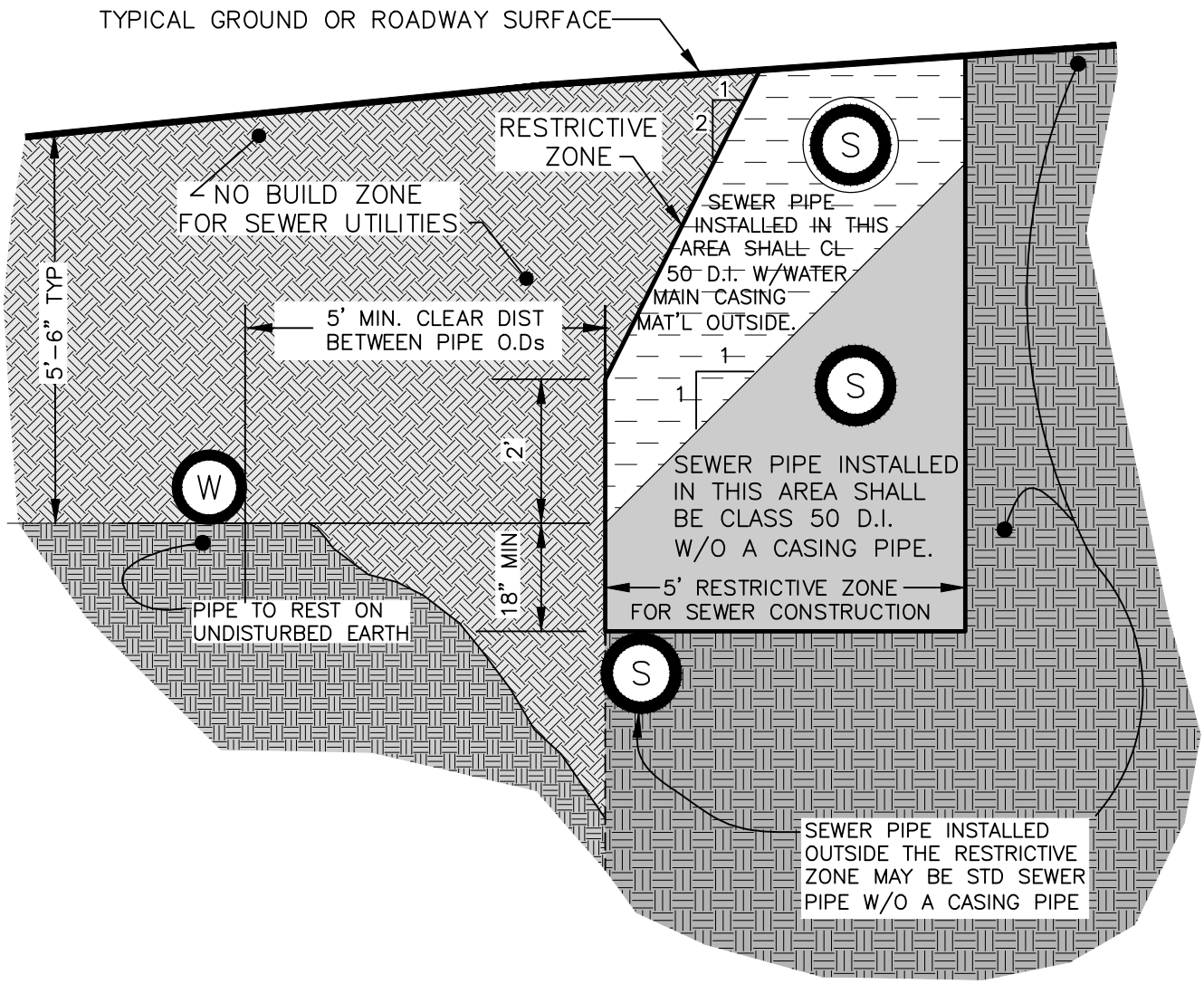

NOTES APPLY TO GRAVITY & PRESSURE SEWER MAINS INSTALLED W/IN THE RESTRICTIVE ZONE

1. SEWER MAINS 24" DIA & LARGER MAY REQUIRE MORE STRINGENT CONSTRUCTION STANDARDS.
2. SEWER MATERIALS & JOINTS SHALL MEET WATER MAIN STANDARDS.
3. SEWER MAINS SHALL BE INSTALLED & TESTED IN ACCORDANCE W/ SEC. 7-17.
4. THE RESTRICTIVE ZONE IS SYMMETRICAL ABOUT THE WATER LINE.

APPROVED BY

DIRECTOR, ENGINEERING SERVICES — TOM L. ARNOLD, P.E.

PRINCIPAL ENGINEER, DESIGN — GARY S. NELSON, P.E.

ADOPTED:	3/1992
REVISED:	05/2007
SUPERSEDES:	12/1998
CHECKED BY:	JAG
SCALE:	NTS
DWG/REV. BY:	REP/RLB

SEWER UTILITY
LOCATION & CONSTRUCTION REQUIREMENTS

SPOKANE

ENGINEERING SERVICES
CITY OF SPOKANE, WASHINGTON

STANDARD PLAN No. **A-4**

Back to Section A - TOC

WATER/SEWER CROSSINGS

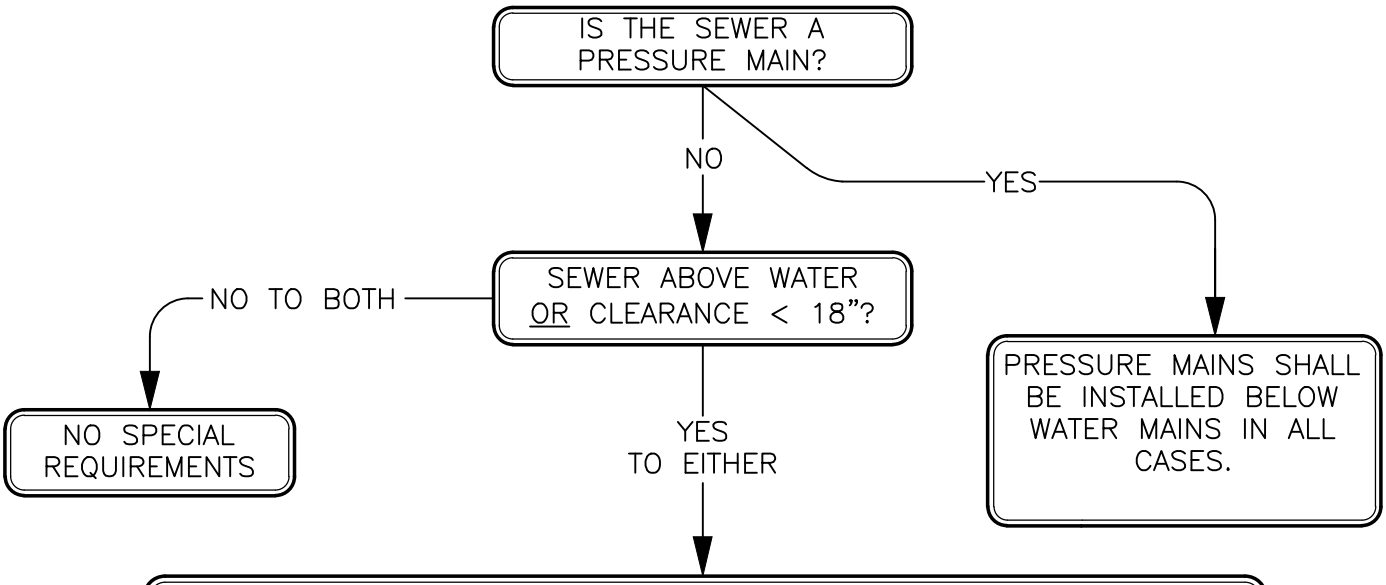

CASE WATER OR WASTEWATER PIPE W/PIPE MEETING THE REQUIREMENTS FOR SANITARY SEWERS FOR A MIN. 10' MEASURED PERPENDICULAR ON EITHER SIDE OF CROSSING.

EXCEPTIONS:
WHEN INSTALLING A WATER MAIN:

- THE CASING LENGTH FOR CROSSING SIDE SEWERS MAY BE REDUCED TO A MIN. 5' MEASURED PERPENDICULAR ON EITHER SIDE OF CROSSING PROVIDED THAT THE CASING IS PLUGGED AT BOTH ENDS WITH AN 18" LENGTH OF NON-SHRINK GROUT;
- STORM SEWER PIPE TO/FROM CATCH BASINS/INLETS NEED NOT BE CASED IF THE EXISTING PIPE IS DI FOR ENTIRE LENGTH OR, IF THE EXISTING STORM SEWER PIPE IS NOT DI, THEN AN 18' SEGMENT OF THE EXISTING STORM SEWER PIPE IS REPLACED WITH A SINGLE PIECE OF DI PIPE, CENTERED ON THE WATER MAIN.

NOTES:

1. CROSSING WATER/SEWER LINES OR THEIR CASINGS SHALL HAVE A 6" MIN VERTICAL SEPARATION.
2. FLOW CHART APPLIES TO BOTH EXISTING & NEW SERVICES & MAINS.
3. DISTANCES GIVEN ABOVE ARE MEASURED FROM OUTSIDE OF PIPES OR OTHER CASINGS.
4. DESIGNER/INSTALLER SHALL MAKE ALL REASONABLE ATTEMPTS TO MEET THE FOLLOWING:
   - SEWER BENEATH WATER BY AT LEAST 18"
   - CROSSINGS AS CLOSE TO 90° AS POSSIBLE

APPROVED BY DIRECTOR, ENGINEERING SERVICES P. MIKE TAYLOR, P.E. PRINCIPAL ENGINEER, DESIGN GARY S. NELSON, P.E.	ADOPTED: 3/92 REVISED: 01/2009 SUPERSEDES: 01/2008 CHECKED BY: JAG SCALE: NTS DWG/REV. BY: MDH/TSS	WATER AND SEWER CROSSINGS SPOKANE ENGINEERING SERVICES CITY OF SPOKANE, WASHINGTON STANDARD PLAN No. A-5

Back to Section A - TOC

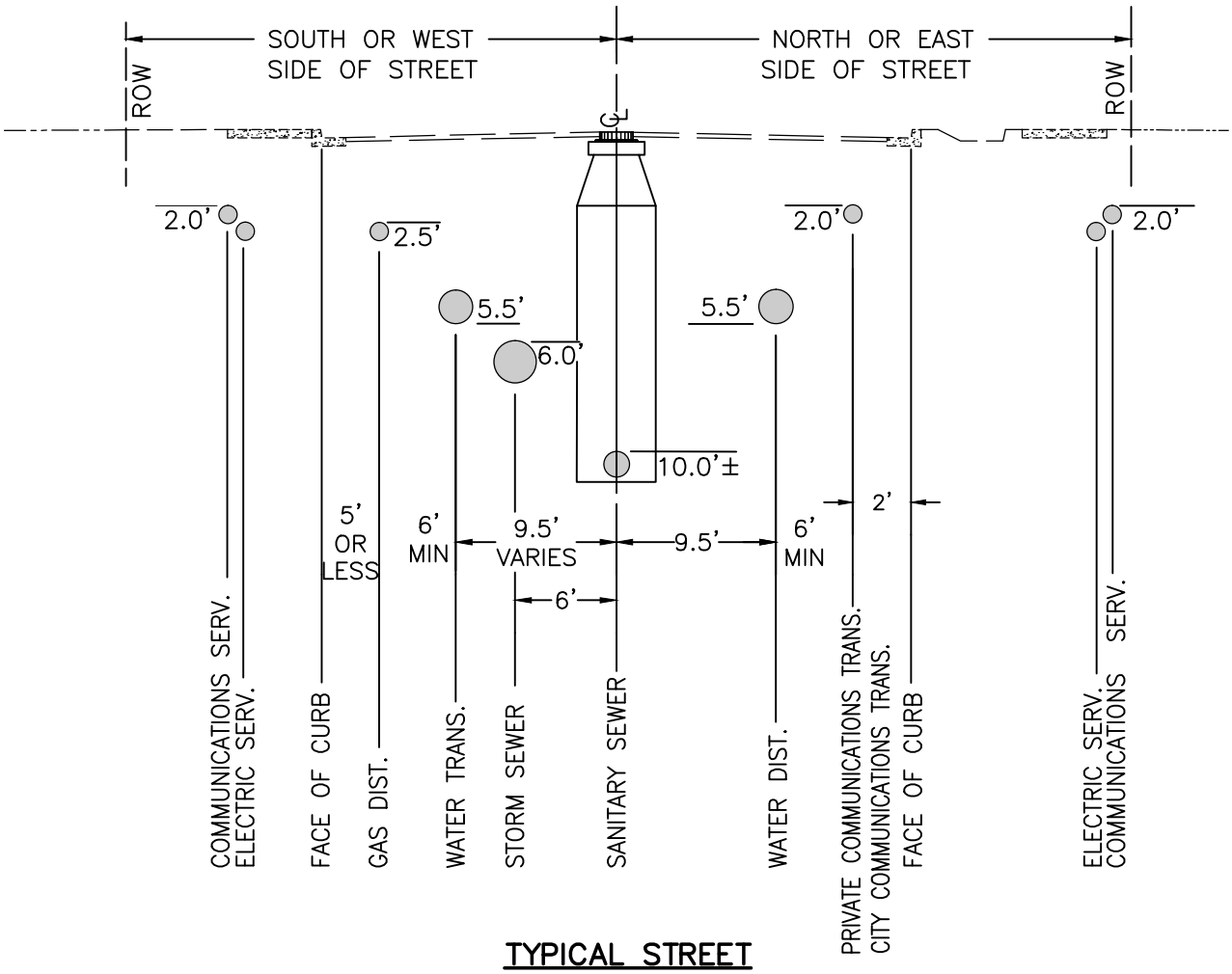

TYPICAL STREET

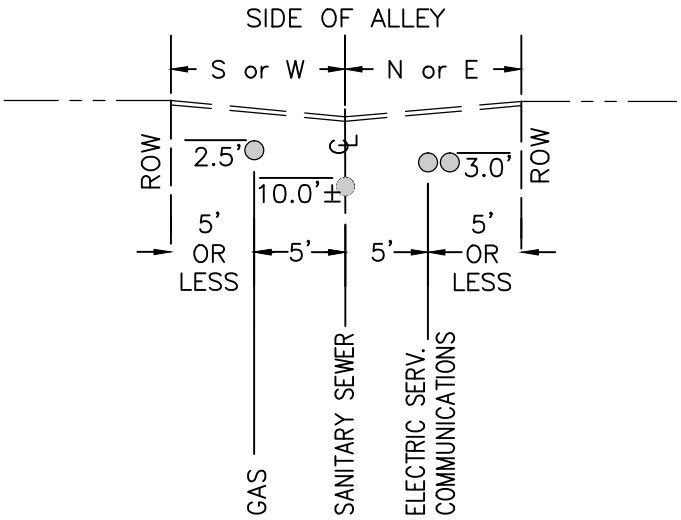

TYPICAL ALLEY

NOTES:

1. LOCATIONS ARE STANDARD FOR UNDERGROUND INSTALLATIONS & VARIATION SHALL REQUIRE PRE-APPROVAL BY THE CITY ENGINEER.

2. ALL LOCATIONS & DEPTHS OF EXISTING UTILITIES SHALL BE VERIFIED BY RESPECTIVE OWNERS PRIOR TO NEW INSTALLATIONS.

CALL BEFORE YOU DIG 456-8000

APPROVED BY ENGINEERING OPERATIONS MANAGER — KYLE TWOHIG CITY ENGINEER — DANIEL ALBERT BULLER, P.E.	ADOPTED: 02/1986 REVISED: 11/2018 SUPERSEDES: W-109A,12/98 CHECKED BY: JAG NTS DWG/REV. BY: JHM	**UNDERGROUND UTILITY LOCATION FOR EXISTING STREETS** SPOKANE — ENGINEERING SERVICES CITY OF SPOKANE, WASHINGTON STANDARD PLAN No. **A-6**

Back to Section A - TOC

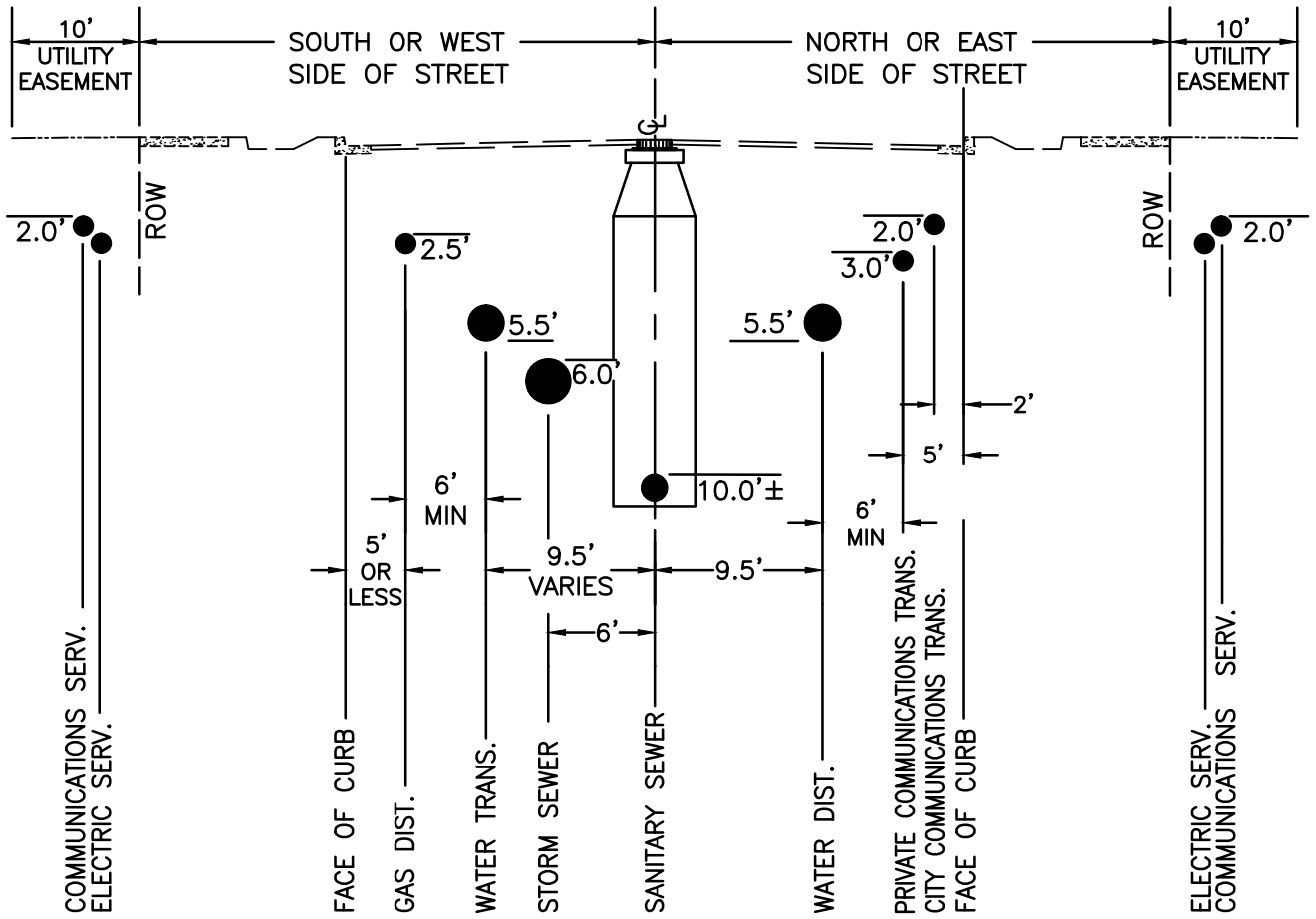

TYPICAL STREET

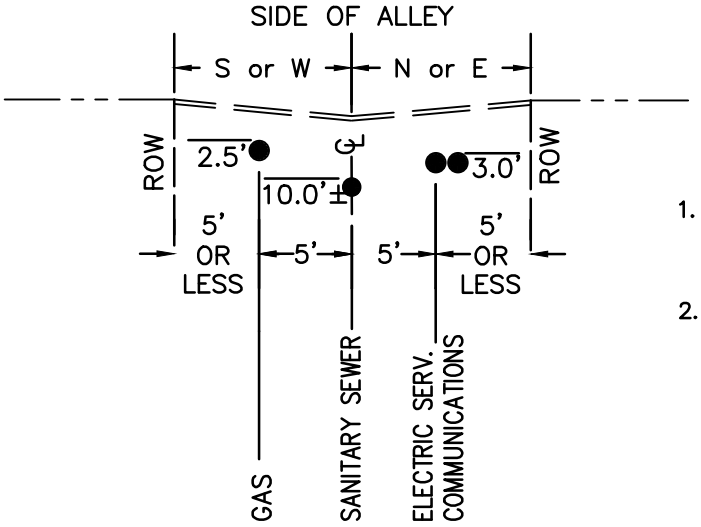

TYPICAL ALLEY

NOTES:

1. LOCATIONS ARE STANDARD FOR UNDERGROUND INSTALLATIONS & VARIATION SHALL REQUIRE PRE-APPROVAL BY THE CITY ENGINEER.
2. ALL LOCATIONS & DEPTHS OF EXISTING UTILITIES SHALL BE VERIFIED BY RESPECTIVE OWNERS PRIOR TO NEW INSTALLATIONS.

CALL BEFORE YOU DIG 456-8000

APPROVED BY ENGINEERING OPERATIONS MANAGER KYLE TWOHIG CITY ENGINEER DANIEL ALBERT BULLER, P.E.	ADOPTED: 05/2007 REVISED: 11/2018 SUPERSEDES: CHECKED BY: JAG SCALE: NTS DWG/REV. BY: RLB/JHM	UNDERGROUND UTILITY LOCATION FOR NEW DEVELOPMENTS SPOKANE ENGINEERING SERVICES CITY OF SPOKANE, WASHINGTON STANDARD PLAN No. A-7

Back to Section A - TOC

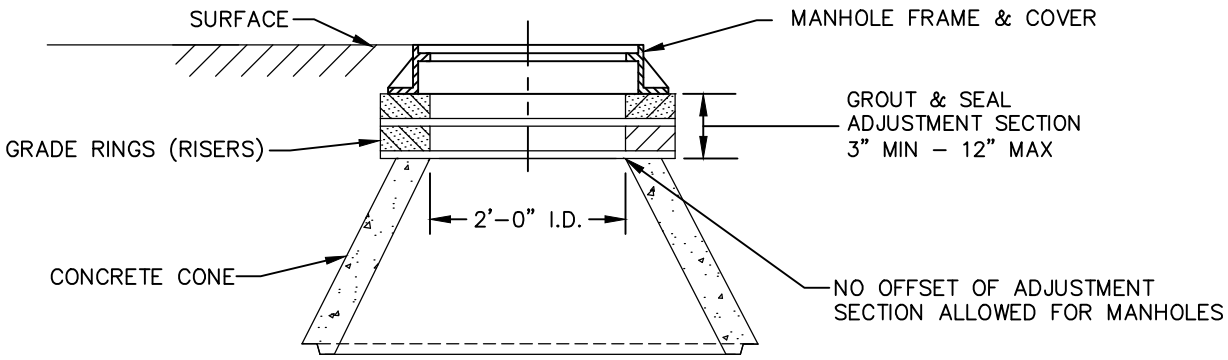

MANHOLE

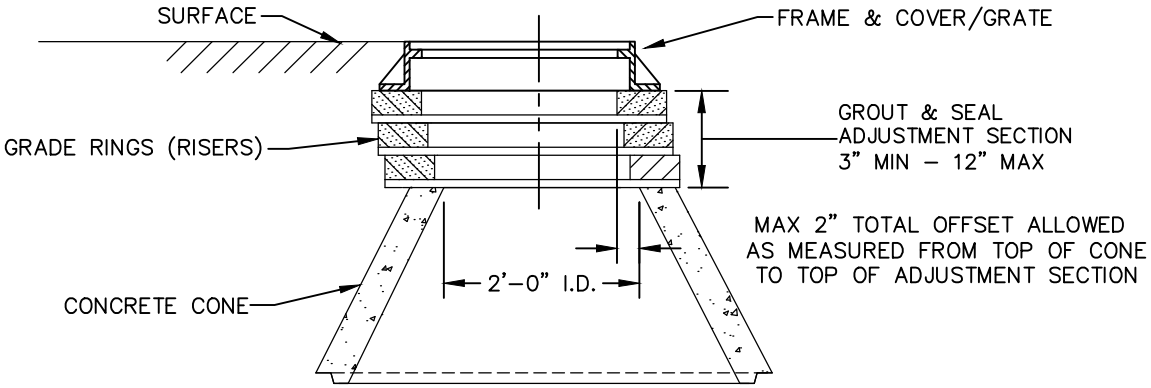

CATCH BASIN, INLET, DRYWELL

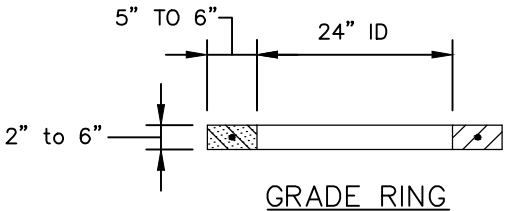

GRADE RING

NOTES:

1. ADJUSTMENT SECTION SHALL BE CONSTRUCTED WITH PRE–FABRICATED REINFORCED CONCRETE GRADE RINGS (RISERS) CONFORMING TO ASTM C478 AND SHALL BE GROUTED IN PLACE.
2. GRADE RINGS SHALL BE A CONTINUOUS LOOP OF REINFORCED CONCRETE AND SHALL BE FLAT. GRADE RINGS SHALL BE A UNIFORM DIMENSION THROUGHOUT ITS CROSS SECTION.
3. GRADE RINGS REINFORCEMENT SHALL BE A MINIMUM OF ONE FULL HOOP OF STEEL REINFORCING OF MINIMUM YIELD STRESS F_y = 40 KSI.
4. IN ADDITION TO THE GRADE RINGS, IF NECESSARY FOR PROPER FINAL ADJUSTMENT HEIGHT OF LESS THAN 2", WEDGES OF PRE–FABRICATED CERAMIC OR CONCRETE BRICK AS APPROVED BY THE ENGINEER MAY BE USED AND SHALL BE GROUTED IN PLACE.
5. ADJUSTMENT SECTION SHALL BE SEALED PER SECTION 7–05.

APPROVED BY ENGINEERING OPERATIONS MANAGER KYLE TWOHIG CITY ENGINEER DANIEL ALBERT BULLER, P.E.	ADOPTED: 1/2017 REVISED: SUPERSEDES: CHECKED BY: WRP SCALE: NTS REVISED BY: EWS	**ADJUSTMENT SECTION** GRADE RINGS (RISERS) SPOKANE ENGINEERING SERVICES CITY OF SPOKANE, WASHINGTON STANDARD PLAN No. **A–8**

Back to Section A - TOC

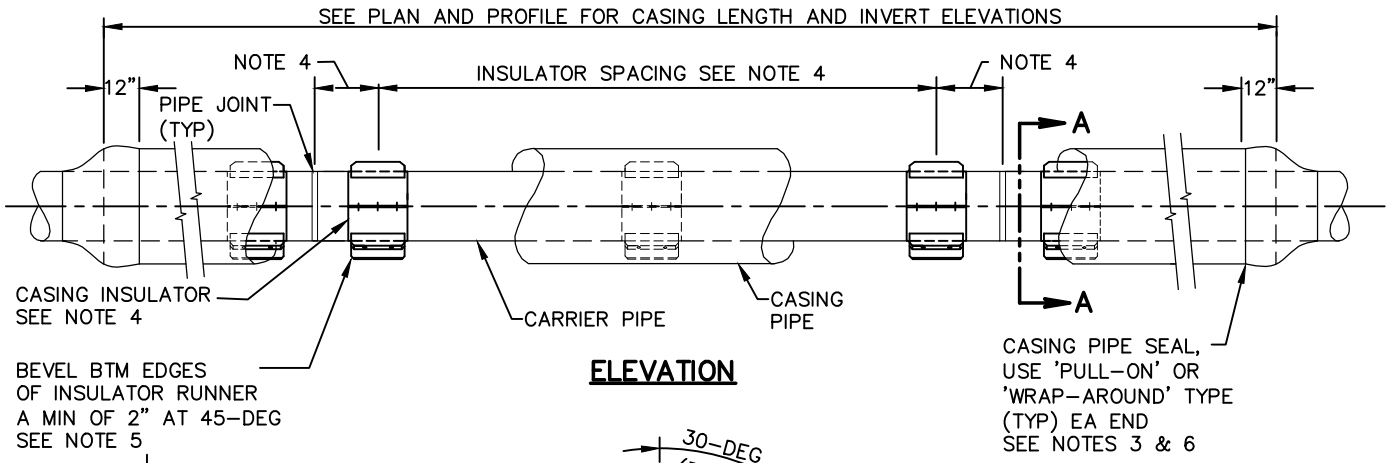

ELEVATION

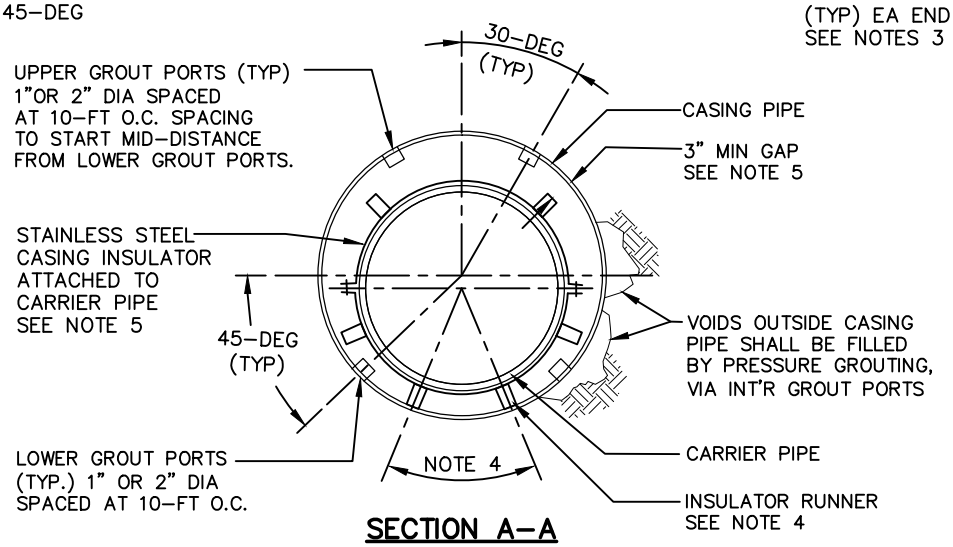

SECTION A–A

STEEL CASING DETAIL

NOTES:

1. CASING SHALL BE SMOOTH STEEL PIPE MANUFACTURED TO ASTM A–53, TYPE 'E', GRADE 'B' FOR NPS UP TO 26–INCH DIA & ASTM A–252, GRADE '2' FOR NPS GREATER THAN 26–INCH DIA, THAT CONFORMS TO AWWA C–200 QUALITY CONTROL PROCEDURES & HAVE A MIN YEILD OF 35 KSI.

2. CARRIER PIPE SHALL BE INSTALLED PER MANUFACTURER'S REQ'MTS & CITY OF SPOKANE CONTRACT PROVISIONS.

3. CARRIER PIPE SHALL BE PRESSURE TESTED PER CITY OF SPOKANE CONTRACT PROVISIONS PRIOR TO SEALING ENDS OF CASING PIPE.

4. PER–FABRICATED CASING INSULATORS SHALL BE POSITIONED & SPACED PER MANUFACTURER'S REQ'MTS & CASING/ CARRIER PIPE APPLICATION. INSULATOR SPACING SHALL NOT EXCEED 8–FT O.C. NOR BE LOCATED MORE THAN 1'–6" FROM CARRIER PIPE JOINTS. CASING INSULATORS SHALL BE PRE–APPROVED BY THE ENGINEER PRIOR TO PLAN APPROVAL OR INSTALLATION. THE CONTRACTOR SHALL COORDINATE W/ THE INSULATOR MANUFACTURER SO THAT THE INSULATOR RUNNER POSITIONS AROUND THE OUTER CIRCUMFERENCE OF THE CARRIER PIPE DO NOT INTERFERE W/ THE GROUT PORT POSITIONS AROUND THE INT'R CIRCUMFERENCE OF THE CASING PIPE.

5. INSULATOR RUNNER HEIGHT SHALL EXTEND BEYOND THE O.D. OF THE CARRIER PIPE'S BELL OR JOINT A MIN OF 1". RUNNER LENGTH SHALL EXCEED RUNNER HEIGHT BY A 2:1 MIN RATIO. RUNNER WIDTH SHALL BE EQUAL TO OR GREATER THAN RUNNER HEIGHT. MIN CLEARANCE SHALL BE 3" BETWEEN RUNNERS NEAR TOP OF CARRIER PIPE & INSIDE DIA OF CASING PIPE. CASING INSULATORS SHALL HAVE STAINLESS STEEL (SS) ATTACHMENT BANDS CONNECTED TO THE CARRIER PIPE VIA (SS) BOLTS/NUTS.

6. CASING PIPE SHALL BE SEALED AT BOTH ENDS W/ A STD 'PULL–ON' OR 'WRAP–AROUND' SYNTHETIC RUBBER CASING SEAL. SECURE CASING SEAL W/ STAINLESS STEEL BANDS. CASING SEALS SHALL BE PRE–APPROVED BY THE ENGINEER PRIOR TO PLAN APPROVAL OR INSTALLATION.

APPROVED BY DIRECTOR, ENGINEERING SERVICES TOM L. ARNOLD, P.E. PRINCIPAL ENGINEER, DESIGN GARY S. NELSON, P.E.	ADOPTED: 4/2004 REVISED: 05/2007 SUPERSEDES: 4/2004 CHECKED BY: JAG SCALE: NTS DWG/REV. BY: TSS/MDH	CASING/CARRIER PIPE DETAILS SPOKANE ENGINEERING SERVICES CITY OF SPOKANE, WASHINGTON STANDARD PLAN No. A–9

Back to Section A - TOC

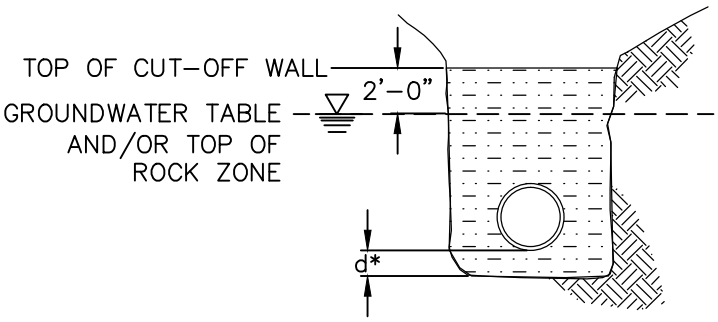

SECTION A–A

*d = 6" ON ROCK FOUNDATION
4" ON OTHER MATERIALS

NOTES:

1. CUT–OFF WALLS PLACED WITHIN THE CITY R–O–W SHALL BE CONSTRUCTED USING MACHINE EXCAVATABLE CDF AS DESCRIBED IN SECTION 2–09.3(1)E. PIPE SHALL BE WRAPPED WITH 6 MIL PLASTIC.

2. CUT–OFF WALLS NOT PLACED WITHIN THE CITY R–O–W MAY BE CONSTRUCTED USING CLAY OR A BENTONITE PEA GRAVEL SLURRY.

3. CUT–OFF WALL SHALL BE WRAPPED WITH WOVEN GEOTEXTILE FABRIC FOR SEPARATION, SEE SEC 9–33. OVERLAP ALL FABRIC JOINTS 1'–6" MIN.

4. CUT–OFF WALL SHALL BE FULL WIDTH OF TRENCH.

5. L = 3' FOR CDF CUT–OFF WALL
   L = 6' FOR CLAY OR BENTONITE PEA GRAVEL SLURRY CUT–OFF WALL

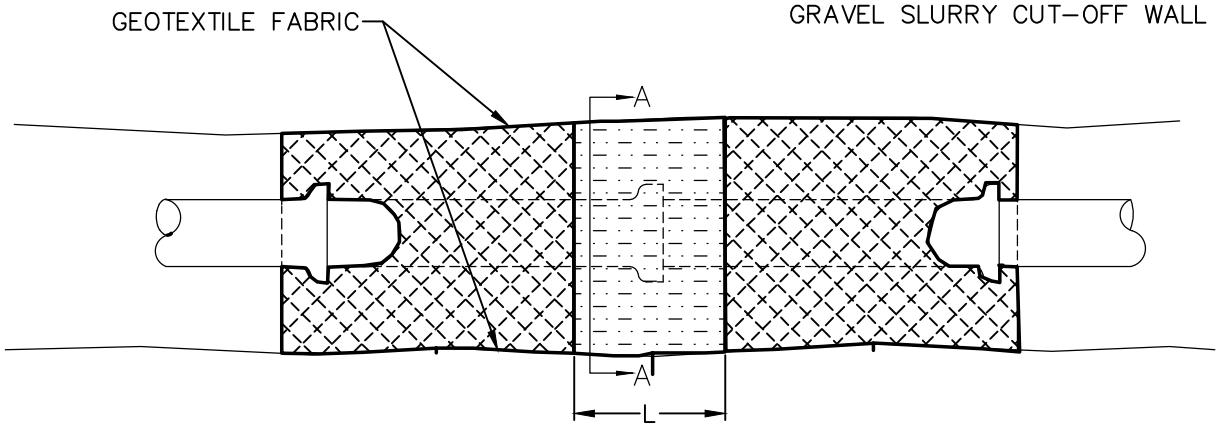

PLAN

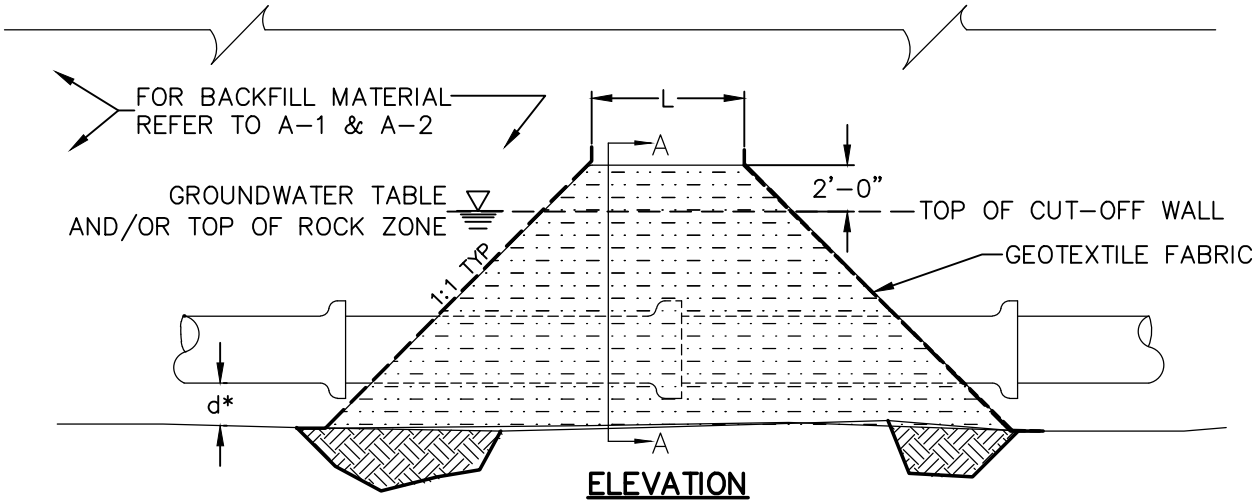

ELEVATION

APPROVED BY		
ENGINEERING OPERATIONS MANAGER — KYLE TWOHIG	ADOPTED: 12/1993	CUT–OFF WALL
	REVISED: 01/2017	
	SUPERSEDES: 12/1993	
	CHECKED BY: JAG	ENGINEERING SERVICES
	SCALE: NTS	CITY OF SPOKANE, WASHINGTON
CITY ENGINEER — DANIEL ALBERT BULLER, P.E.	DWG/REV. BY: MLD	STANDARD PLAN No. A–10

Back to Section A - TOC

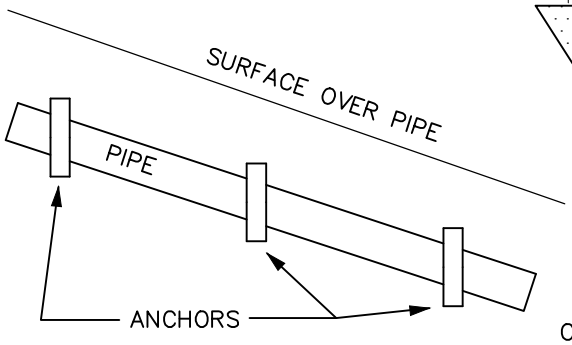

ELEVATION
CONCRETE PIPE ANCHORS

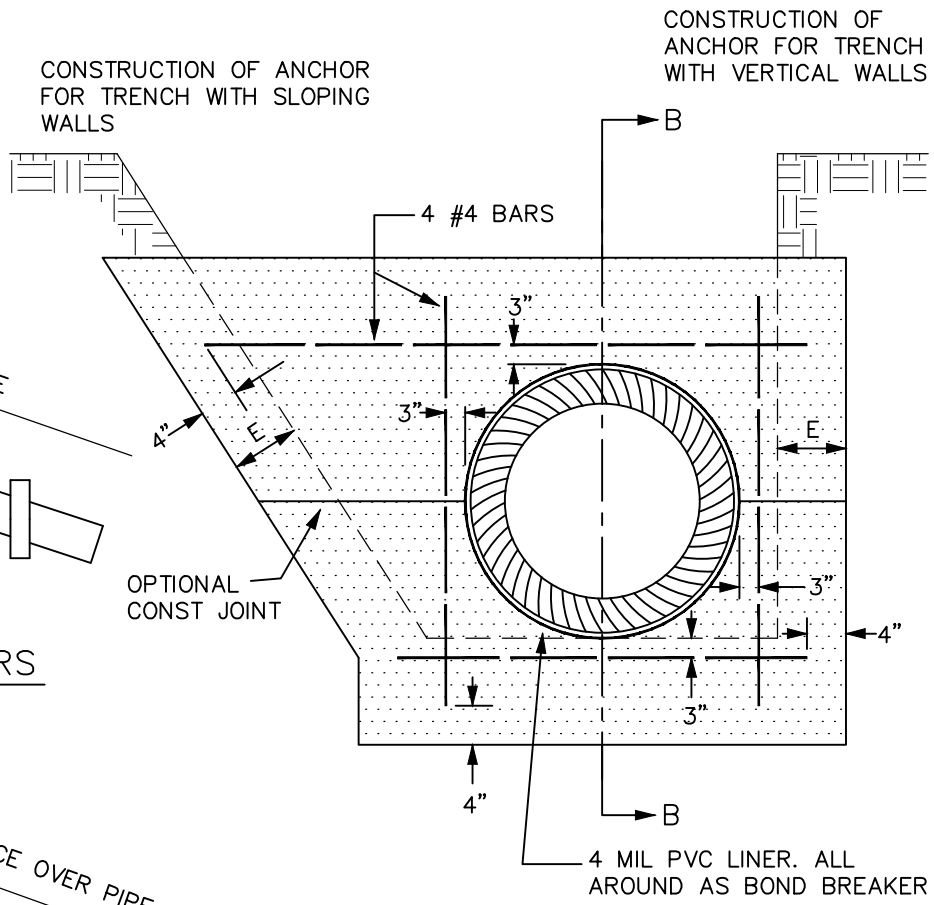

SECTION A–A

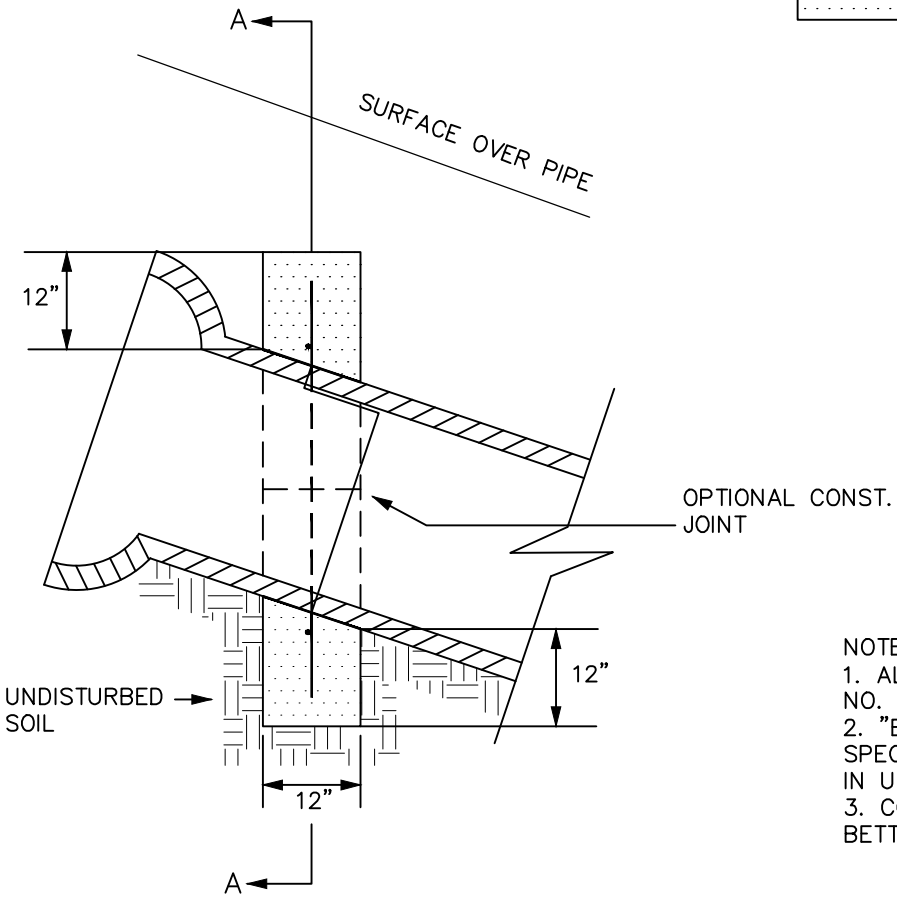

SECTION B–B

NOTES:
1. ALL REINFORCING STEEL SHALL BE NO. 4 BARS.
2. "E" SHALL BE 8" UNLESS OTHERWISE SPECIFIED, AND SHALL BE CONSTRUCTED IN UNDISTURBED SOIL.
3. CONCRETE SHALL BE CLASS 3000 OR BETTER.

APPROVED BY CITY ENGR. SUPV. DES. ENGR.	SCALE NONE ADOPTED 6/92	PIPE ANCHOR	
	REVISED SUPERSEDES	DEPT. OF PUBLIC WORKS ENGR. DIVISION SPOKANE, WA	STANDARD PLAN No. A–11

Back to Section A - TOC

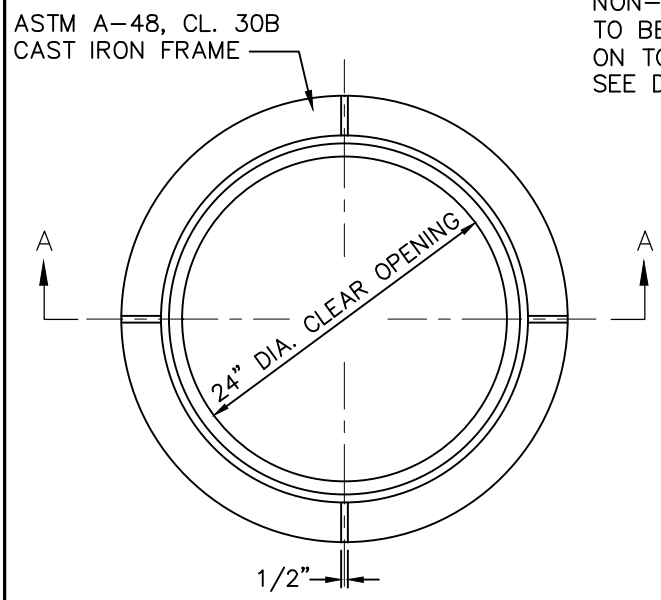

CAST IRON FRAME

MIN. WEIGHT 168 LBS.

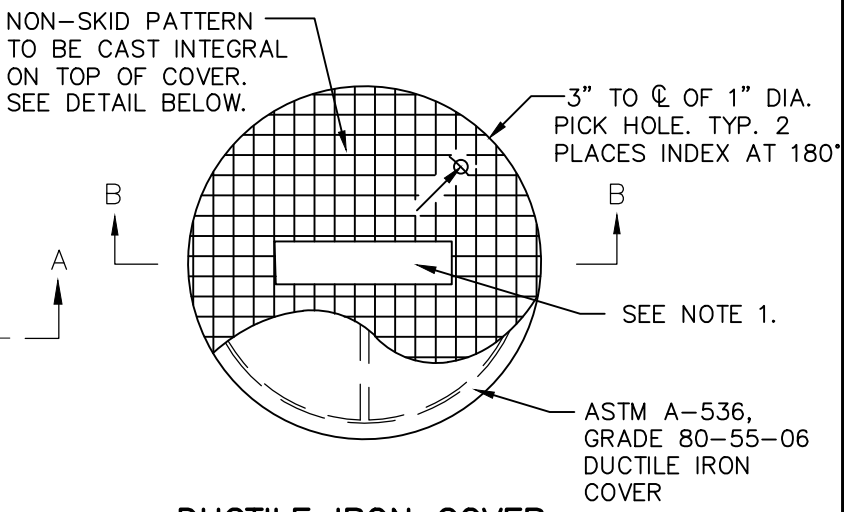

DUCTILE IRON COVER

MIN. WEIGHT 118 LBS.

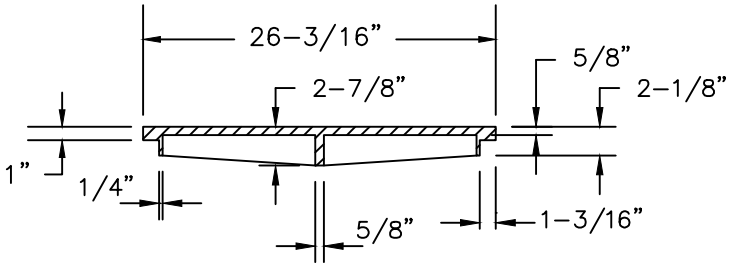

SECTION B-B

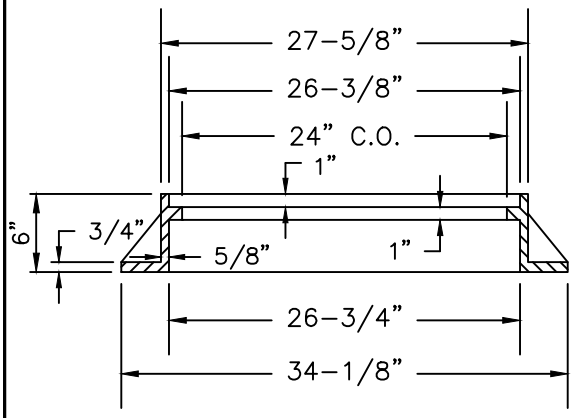

SECTION A-A

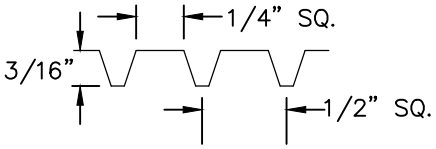

COVER SKID DESIGN DETAIL

NOTES:

1. THE APPROPRIATE WORD "SEWER", "STORM", OR "WATER" SHALL BE EMBOSSED ON EACH MANHOLE COVER WITH 3/16" RAISED LETTERS.
2. MATING SURFACES SHALL BE FINISHED TO ASSURE NON-ROCKING FIT W/ ANY COVER POSITION.

APPROVED BY

DIRECTOR, ENGINEERING SERVICES — TOM L. ARNOLD, P.E.

PRINCIPAL ENGINEER, DESIGN — GARY S. NELSON, P.E.

ADOPTED:	2/1990
REVISED:	05/2007
SUPERSEDES:	6/1995
CHECKED BY:	JAG
SCALE:	NTS
DWG/REV. BY:	RLB

MANHOLE FRAME AND COVER

SPOKANE

ENGINEERING SERVICES
CITY OF SPOKANE, WASHINGTON

STANDARD PLAN No. A-12

Back to Section A - TOC

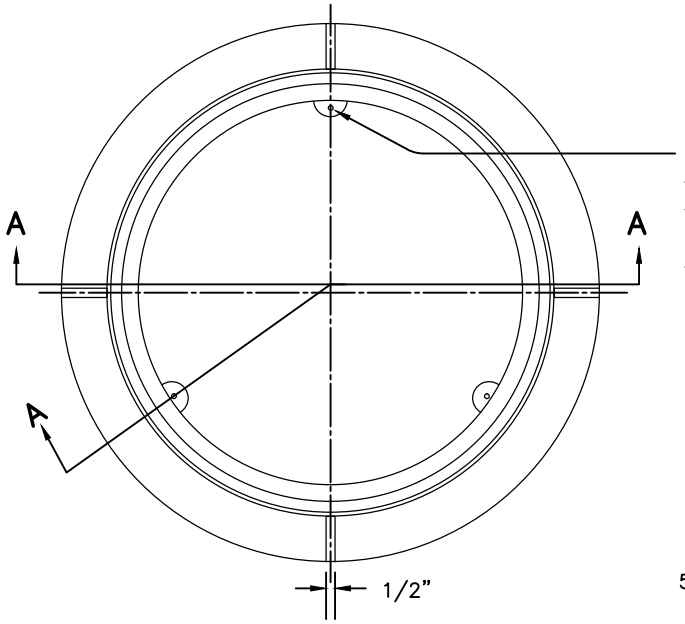

CAST IRON FRAME

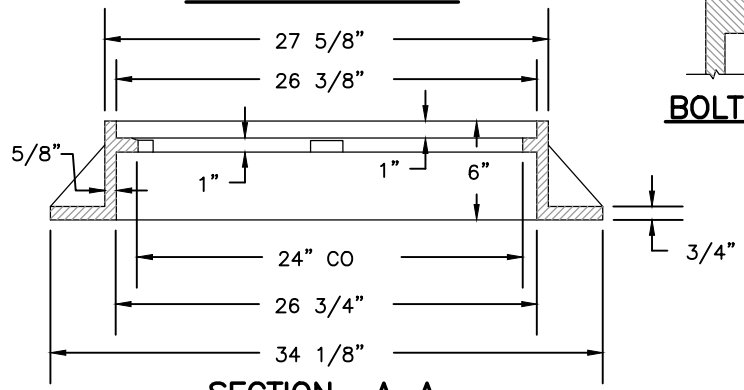

SECTION A–A

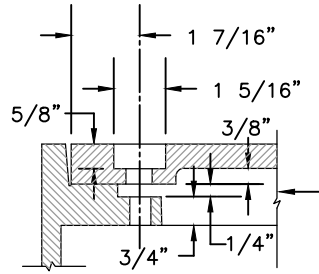

BOLT–DOWN DETAIL

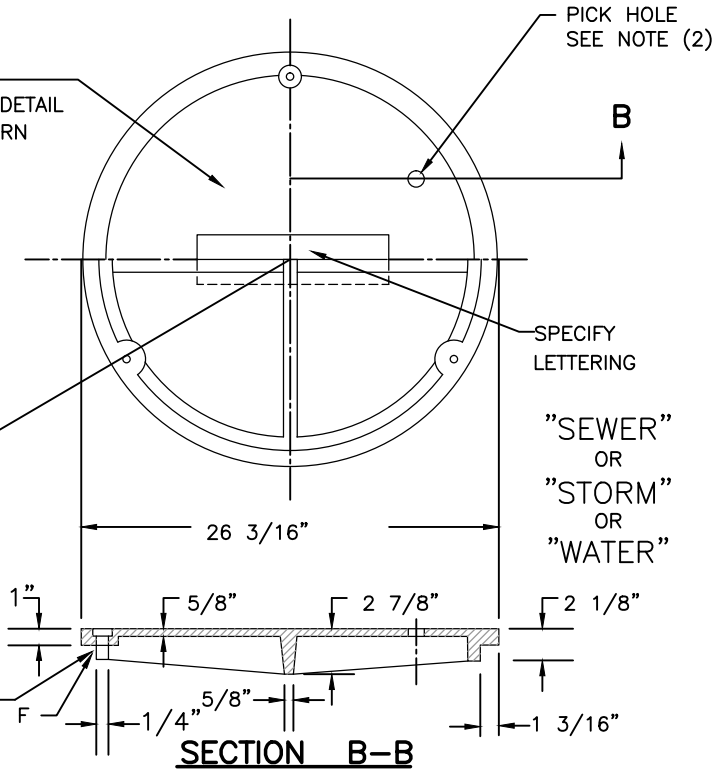

SECTION B–B

DUCTILE IRON COVER

DRAWING NOTES:

1. MATERIALS SHALL CONFORM TO SECTION 9–05.15(1) OF THE SPECIFICATIONS
2. 3" TO OF ℄" DIA. PICK HOLE. TYP. 2 PLACES INDEXED AT 180°.

APPROVED BY

ENGINEERING SERVICES DIRECTOR — KYLE TWOHIG

CITY ENGINEER — DAN BULLER, P.E.

ADOPTED: _____
REVISED: 10/2019
SUPERSEDES: 06/1995
CHECKED BY: DAB
SCALE: NTS
DWG/REV. BY: MLD

MANHOLE FRAME AND COVER
3–POINT BOLT DOWN

SPOKANE

ENGINEERING SERVICES
CITY OF SPOKANE, WASHINGTON

STANDARD PLAN No.
A–13