CITY OF SPOKANE PARK BOARD
RIVERFRONT PARK COMMITTEE

8:05 a.m. Monday, June 11, 2018
City Council Briefing Center, lower level City Hall
808 W. Spokane Falls Blvd., Spokane WA 99201
Riverfront Park Director Jonathan Moog

Committee Members:
Ted McGregor – Chair
Rick Chase
Jennifer Ogden (absent/excused)
Gerry Sperling
Jamie SiJohn (left: 9:03 a.m.)

Also Present:
Park Board:
Chris Wright
Parks Staff:
Leroy Eadie
Jonathan Moog
Berry Ellison
Fianna Dickson
Amy Lindsey
Kevin Sharrai

Guests:
Gary Henderson
Hal McGlathery
Danielle Arnold

Summary

- The committee approved to recommend the Park Board accept the following:
  - Recognition guidelines for the Riverfront Campaign
  - Garco Construction change order #4/Pavilion and Promenade ($150,031)
  - Walker Construction change order #11/Looff Carrousel ($102,518)

- The Historic Carousels Inc. contract amendment #2 was deferred as an action item until further information and analysis may be completed.

- An update on the Riverfront Spokane programming was presented.

- An overview was provided regarding a potential plan to relocate the Vietnam Veterans Memorial statue from its current location overlooking the Lilac Bowl to the Spokane Veterans Memorial Arena. Additional information is anticipated for discussion at the July 9 committee.

- An operations report was presented.

- The redevelopment budget-to-actual update was presented.

- An update on the EPA grants was provided.

The next regularly scheduled Riverfront Park Committee meeting will be 8:05 a.m. July 9, 2018, City Council Briefing Center, lower level City Hall.

Minutes

The meeting was called to order at 8:07 a.m. by Committee Chair Ted McGregor. Introductions were made.

Action Items:

1. Recognition guidelines for the Riverfront Campaign – *Ted McGregor* presented the proposed recognition guidelines for the Riverfront Campaign. In January, the Spokane Parks Foundation approved a $3 million capital campaign to supplement the $64 million redevelopment bond. These guidelines outline how each campaign donor will be recognized depending on the type and size of the gift.

Motion #1: Ted McGregor moved to recommend the Park Board accept the recognition guidelines for the Riverfront Campaign as presented.

Gerry Sperling seconded.
The motion passed with unanimous consent.

2. Garco Construction change order #4/Pavilion and Promenade ($150,031, plus tax) – Berry *Ellison* presented the proposed change order #4 with Garco Construction for work on the Pavilion and Promenade in the amount of $150,031. Work on the Pavilion involves restoring power for park events, changing the Pavilion floor from asphalt to concrete, and adding an acoustic consultant for performance planning. Work on the Promenade includes changing a portion of snxʷ mene? asphalt paving to concrete and HAZMAT abatement.

Motion #2: Ted McGregor moved to recommend the Park Board approve change order #4 with Garco Construction in the amount of $150,031, plus tax.

Rick Chase seconded.
The motion passed with unanimous consent.

3. Walker Construction change order #11/Looff Carrousel ($102,518, plus tax) – *Berry Ellison* presented the proposed change order #11 with Walker construction for work on the Looff Carrousel. The change order includes Post Street traffic control, decorative carrousel lighting, communications, rock removal and other value-added improvements. Mr. McGregor explained this change order did not go through the Executive Team. In order to be in compliance, he asked for an email to be distributed to ET requesting a 24-decision on the change order prior to Thursday's Park Board meeting.

Motion #3: Rick Chase moved to recommend the Park Board approve change order #11 with Walker Construction in the amount of $102,518, plus tax.

Ted McGregor seconded.
The motion passed with unanimous consent.

4. Historic Carousels Inc. contract amendment #2/Looff Carrousel ($55,000) – *Ted McGregor* requested the Historic Carousels contract amendment be removed as an action item. *Jon Moog* explained additional information and more a detailed analysis will be provided next month.

Information Items:

1. Vietnam Veterans Memorial statue – *Leroy Eadie* provided an overview relating to the potential of moving the Vietnam Veterans Memorial statue from its site overlooking the Lilac Bowl to the Spokane Veterans Memorial Arena. Some proponents of the move, see this as an opportunity to have all of the city's veterans memorials to be sited at one location. Hal McGlathery and Gary Henderson shared some background relating to the statue's history and their opinions relating to this relocation. McGlathery and Henderson served on the Veterans Committee which was instrumental in raising funds and having the statue sited in the park. Mr. McGlathery believes the statue's rich history needs to be shared with citizens and the Park Board. It was noted, this sculpture was the first Vietnam Veterans Memorial statue in the country which was dedicated Nov. 10, 1985. Mr. Henderson was a key factor in raising the $95,000 for the memorial. He explained the reasoning behind placing the sculpture at its location was because it was a peaceful site. He urged the Park Board to allow it to remain at Riverfront Park. There was discussion to reach out to local veterans' organizations to get their input. The committee and staff voiced interest in sharing the monument's history with the Mayor's office and those citizens who looking into this potential move. Parks sees a need in getting additional input from members of the Veterans Committee who raised the funds for the statue. In order to proceed, this proposal would need to be supported by the Joint Arts and Riverfront Park committee, and receive Park Board approval. Further discussion is planned for the July 9 committee meeting.

2. Riverfront Spokane programming update – *Jonathan Moog* and *Amy Lindsey* provided an update on the Riverfront Spokane programming. Mr. Moog also shared the chronology of the park's amusement rides since 2012. Ms. Lindsey presented an overview which included the mission, goal, programming categories, target markets and the programming schedule.

Standing Report Items:

1. Operations report – *Jonathan Moog* presented the monthly operations report. Highlights included: 1) the SkyRide is tentatively set to open July 1; 2) the Looff Carrousel has had more than 25,000 riders in the last four weeks; 3) the Spider Jump is expected to arrive in about five weeks; and 4) misters may be installed on the skate ribbon by Hoopfest.

2. Riverfront Park Redevelopment Update – *Danielle Arnold* presented the Riverfront Park Redevelopment monthly update. Approximately $850,000 was spent in the past month.

3. EPA grants update – An update on the three grants for Brownfield cleanup in Riverfront Park was provided. On March 30, the required Quality Assurance Project Plan draft was submitted EPA for comment, but due to staffing challenges at the agency no comments or approval have been provided.

Adjournment: The meeting was adjourned at 10:03 a.m.

Next meeting will be at 8:05 a.m. July 9, 2018, City Hall Council Briefing Center, lower level, 808 W. Spokane Falls Blvd., Spokane, Washington.

Return to Page 2

CAMPAIGN GIFT COUNTING AND RECOGNITION GUIDELINES

In January 2018, the Spokane Parks Foundation Board of Directors approved a $3 million capital campaign to supplement the $64 million bond redevelopment of Riverfront Spokane.

The following definitions are used in this document:

Counting is the numeric summary of activity, results, and progress towards goal.

Reporting is the process of conveying with clarity and transparency what has happened during a specific timeframe.

Recognition is Riverfront Spokane specific and represents the way the Spokane Parks Foundation will recognize donors to the Campaign for Riverfront Spokane.

Naming is the opportunity given to a donor to associate their name with a project or item.

CAMPAIGN FUNDRAISING, REPORTING AND PLEDGE PERIOD

- Campaign fundraising period: The fundraising period for the campaign officially begins on January 1, 2018. At this time, Spokane Parks Foundation begins to recognize specific gifts that can be allocated to the campaign. The fundraising period will continue through December 31, 2019, or as adjusted by the board of directors.
- Campaign reporting period: The reporting period allows for multiyear pledges to be fully paid within 3 years of pledge (no later than December 31, 2021).
- Spokane Parks Foundation may elect to accept pledges with longer payment periods if warranted by special circumstances.

ACKNOWLEDGING AND RECORDING CAMPAIGN GIFTS AND PLEDGES

Outright gifts to the campaign (cash) will be acknowledged and recorded upon receipt. A pledge will be acknowledged and recorded when it is confirmed in writing (by email, on a campaign pledge form, or in a personalized gift agreement). Verbal pledges may be tracked and recognized informally, but they may not be recorded or counted toward the campaign goal until confirmed in writing or paid in full.

Once a pledge is received, a staff member will follow up with the donor to confirm his/her intentions for paying the pledge (amount and timing of payments, sources of funds, etc.). Unless otherwise specified by the donor, pledges will be invoiced quarterly (e.g., January 1, April 1, etc.).

TYPES OF GIFTS ACCEPTED FOR THE CAMPAIGN

- Outright gifts of cash, securities, and property that comply with SPF Gift Acceptance Policy
- Donor advised funds (payments made through donor advised funds cannot be used to fulfill a pledge)
- Employer matching gifts (will count toward the donor's total gift)
- Pledges up to three years (see criteria above) can be paid with cash, stocks, bonds, mutual funds, etc.
- Planned gifts realized/paid by December 31, 2021

CAMPAIGN GIFT COUNTING

- A signed commitment for an outright gift or pledge made during the campaign fundraising period will count toward the goal
- Gifts made to the Foundation under conditions set forth in the MOU and FSA with the City of Spokane
- Planned gifts that meet specific conditions, and are realized *during* the campaign, can count toward the campaign goal; planned gifts that are pledged during the campaign fundraising period, but not realized during the campaign pledge period do not count towards campaign goal

CAMPAIGN GIFT RECOGNITION

Spokane Parks Foundation is committed to recognizing every donor to the campaign in an appropriate manner. Anonymity (name, amount of gift, terms of gift, and/or purpose of gift) will be observed based on the donor's request. Responsibility for reviewing and approving recognition guidelines, including terms of naming opportunities, will be vested in the Campaign Steering Committee and Spokane Parks Foundation Board of Directors. Revising the guidelines will be considered by the Board of Directors upon the recommendation of the Campaign Manager or Executive Director of the Foundation.

Generally speaking, donor recognition will include printed and electronic communication. Information regarding campaign naming and recognition opportunities will be updated as the campaign evolves.

GENERAL RECOGNITION

All donors will be included on lists of campaign donors and recognized in campaign publications unless they request to be anonymous or make anonymous gifts. All such requests will be honored across all publications and published campaign lists.

Matching Gifts

For the purposes of donor recognition, a donor's matching gift will be included in their gift total. For example, Jane Doe gives $5,000, and her company match is $5,000 so she would be recognized as a $10,000 donor. The matching gift company will be recognized, at the matching gift level if a written pledge is received. If no pledge is received from the company, it will be recognized for the cash total of its match, which could increase over the time period of the campaign.

Recognition Based Upon Gift Size

Donors will receive recognition for their gifts following the Spokane Parks Foundation's Campaign Naming & Recognition Guidelines.

CAMPAIGN NAMING & RECOGNITION OPPORTUNITIES

Spokane Parks Foundation is very grateful to the many generous donors to the Campaign for Riverfront Spokane. To honor their generosity, donors will receive special recognition as outlined below.

LEAD GIFT NAMING OPPORTUNITIES

$1,000,000	**EXCLUSIVE RIGHTS TO NAME THE INCLUSIVE PLAYGROUND**
$ 500,000	**INNOVATIVE INCLUSIVE PLAYGROUND** *on West Havermale Island with interactive play pieces, solid surfaces for wheelchairs and walkers, and a beautiful view of the Island, the inclusive playground will mirror the quality and spirit of the park itself*
$ 500,000	**TOUR TRAIN EXCLUSIVE (Engine & 3 Box Cars)** * *Showcasing the park while giving visitors informational tours*
$ 250,000	**DOG PARK** *A place for dogs to exercise and play off-leash in a controlled environment under the supervision of their owners*
$ 250,000	**BASKETBALL COURT** *Outdoor basketball court providing a safe place for family fun and serious games*
$ 50,000 @	Rooms for public use in the Looff Carrousel (3), Pavilion (7) & Skate Ribbon (2)

LEAD GIFT RECOGNITION OPPORTUNITIES

$150,000	**TOUR TRAIN ENGINE**
$100,000 @	**TOUR TRAIN BOX CARS– 3 opportunities**
$125,000 @ **2 opportunities**	**BUTTERFLY RESTORATION** *carries the legacy of Expo '74 forward. These iconic sculptures will greet visitors on the north and south ends of the park with beautifully restored fabric wings and a nod to Spokane's moment in the global spotlight*
$50,000 @ **6 potential opportunities**	**INCLUSIVE PLAYGROUND FEATURE** *This could be divided into 6 or more different listings when more design information is available*
$50,000 @ **6+ opportunities**	**INTERPRETIVE SIGNAGE** *will be woven invitingly throughout the park. We cannot look to Spokane's exciting future on the Riverfront without exploring the rich past that shaped this special place. Storytelling stations that share these histories via print, braille, and digital app will keep our shared past alive for generations to come*

MAJOR GIFT RECOGNITION OPPORTUNITIES

	$25,000 +	$10,000	$5,000	$1000
Thank you in Spokesman Review	▲			
Recognition on Social Media (FB, Twitter, etc.	▲			
Inclusion on donor recognition in Riverfront Spokane	▲	▲		
Invitation to special event for major donors	▲			
Recognition at Grand Opening of Named Feature and/or completed park renovation	▲			

OTHER OPTIONS

Forestry Pavilion/2 Sentinels				
Wayfinding Signs				
Adopt a carousel animal (58 opportunities)		**	***	
Recognition on park bench or bike rack (limited number throughout the park)			▲	
Promenade and dog park tiles or pavers		▲	▲	▲
Gathering Spaces/Greens				
Observation Platforms/Lookouts				

** *10 Years*

*** *5 years*

Return to Page 2

Design-Build Change Order Form

For Use with DBIA Document No. 525, *Standard Form of Agreement Between Owner and Design-Builder – Lump Sum* (2010 Edition) and DBIA Document No. 530, *Standard Form of Agreement Between Owner and Design-Builder – Cost Plus Fee with an Option for A Guaranteed Maximum Price* (2010 Edition)

Change Order Number: **4**	Change Order Effective Date: **6/15/18** (date when executed by both parties)
Project: **PAVILION DESIGN BUILD PROJECT**	Design-Builder's Project No:
	Date of Agreement: **APRIL 13, 2017**
Owner: **CITY OF SPOKANE - PARKS & RECREATION DIVISION**	Design-Builder: **GARCO CONSTRUCTION, INC.**

	AREA	DESCRIPTION OF CHANGE	AMOUNT
Item 1	PAV	**Provide permeant power on the east side for events and cell towers – RFP#3**	**$ 32,032**
Item 2	PAV	**Upgrade the Pavilion Floor from Asphalt to Concrete – part of RFP#5**	**$ 54,799**
Item 3	PAV	**Add Acoustical Consultant (Stantec) to the Team**	**$ 7,900**
Item 4	PROM	**Add Original Finishes back to snxʷ mene that were changed as part of Value Engineering – RFP#9**	**$ 54,822**
Item 5	PROM	**Add Cost for Fulcrum Testing**	**$ 478**
		TOTAL AMOUNT	**$ 150,031**

Original Contract Price:	$ **14,500,000**
Net Change by Previous Change Orders:	**$ 2,196,008**
Net Change by GMP Amendment:	$ **4,150,000**
Net Change by Change Order No 4 :	$ **150,031**
New Contract Price:	**$ 20,996,039**

© 2001 Design-Build Institute of America

Original Contract Substantial Completion Date:		**May 30, 2019**
Adjustments by Previous Change Orders:	**0**	(calendar days)
Adjustments by Change Order No ___4__:	**0**	(calendar days)
Revised Scheduled Substantial Completion Date		**No Change**

By executing this Change Order, Owner and Design-Builder agree to modify the Agreement's Scope of Work, Contract Price and Contract Time as stated above. Upon execution, this Change Order becomes a Contract Document issued in accordance with DBIA Document No. 535, *Standard Form of General Conditions of Contract Between Owner and Design-Builder*, (2010 Edition).

OWNER:		**DESIGN-BUILDER:**	
By:		By:	
Printed Name:		Printed Name:	
Title:		Title:	
Date:		Date:	

© 2001 Design-Build Institute of America

ITEM 1

RIVERFRONT PARK MODERIZATION

Request for Proposal (RFP)

Project Name:	PAVILION	**RFP No**:	PAV 03
Project No.	SC6B0322000	**Date:**	3/27/18
Owner:	Spokane Parks & Recreation		
Contractor:	Garco Construction	**Architect/Eng:**	NAC/Berger/Jacobs

Please furnish your proposal for performing the changes outlined below and/or detailed on the attachments if applicable. The quotation should include an itemized breakdown of contractor and subcontractor costs, including labor, materials, rentals, approved services, and equipment. It should also include any schedule impact if applicable.

Description: The Pavilion demolition included removing overhead power from the old east building (science center) southeast to a wood pole that provided a 120/240 volt, 1 phase safety switch energizing a 125 amp Appleton receptacle for temporary event cell tower service via a Verizon COLT or COW.

Contractor shall provide pricing for the following:

1. Coordinate with Avista Utilities:
    a. Provide trench, three 2” empty conduits, and backfill and compaction from Avista submersible enclosure in southwest corner of Lilac bowl north along west edge of Lilac bowl to existing wood pole per sketch below.
    b. Provide fiberglass conduit sleeves and sweep up to utility transformer.
    c. Provide concrete pad for Avista Utilities single phase transformer (estimated to be 37.5 kVA) adjacent to wood pole. Max Fault current at Avista Transformer is estimated to be 11,161 AIC. Coordinate with Avista.
    d. Provide NEMA 3R, Avista approved CT Enclosure with CT Landing Platforms and Meter.
    e. Service ampacity to be 200 amp, 1 phase, 120/240 volt.
    f. Remove two power panels (north and west side of wood pole).
    g. Replace one 200 amp safety switch with 200 amp Service-Entrance Rated fused disconnect switch with 125 amp fuses to be energized by Avista Utility transformer.
    h. Provide 100 amp MCB, 120/240 volt, single phase, 14,000 AIC rated panel with 12 spaces minimum. Provide three 2P-50 amp circuit breakers and three 1P-20 amp circuit breakers.
    i. Provide three #250kcmil phase conductors and one #3 Ground. Use 2.5” conduit where necessary.
    j. Refer to attached documents for clarification.

RIVERFRONT PARK MODERIZATION

Request for Proposal (RFP)

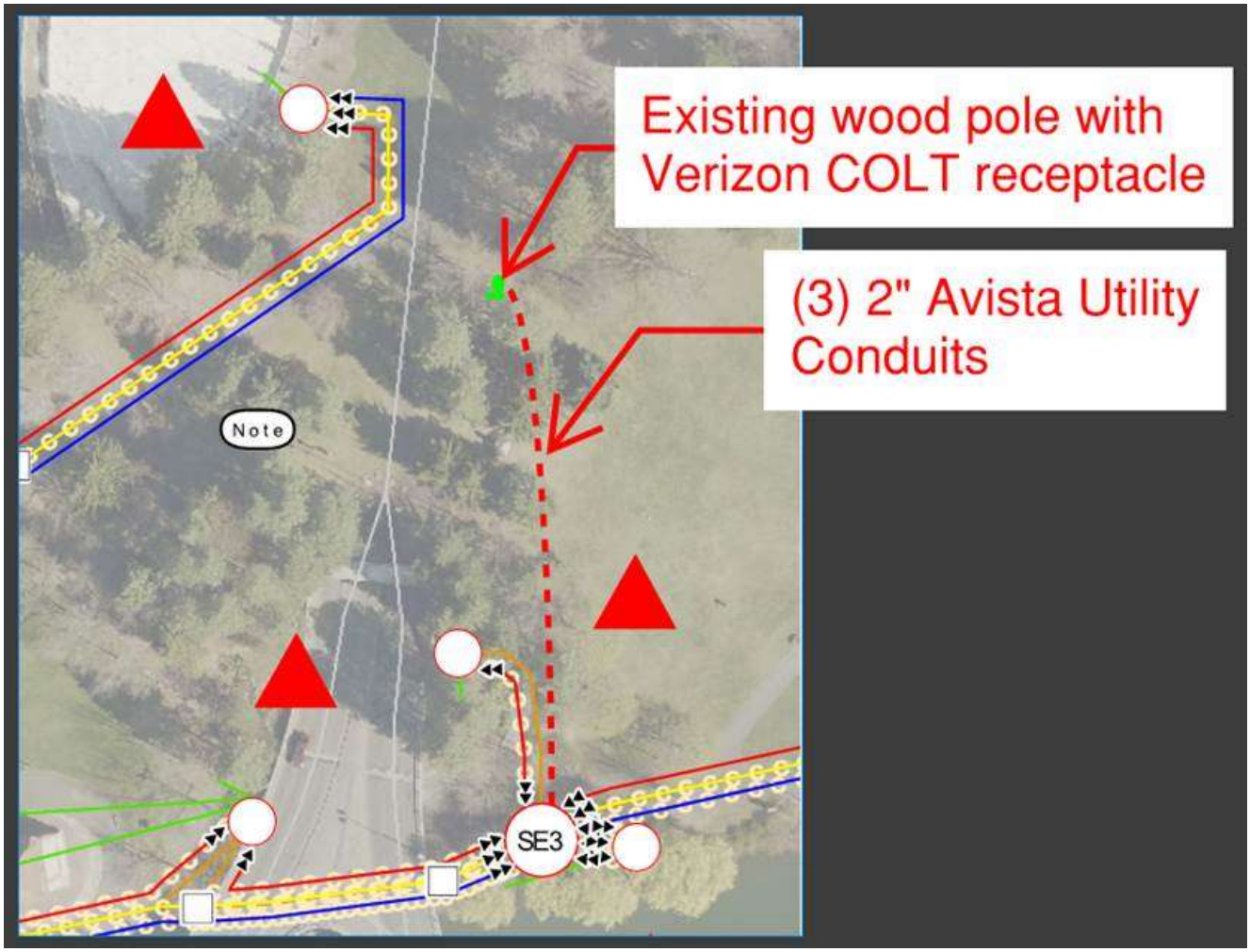

3.4 PADMOUNTED EQUIPMENT DRAWINGS

3.4.1 Three-Phase Transformer Concrete Pads

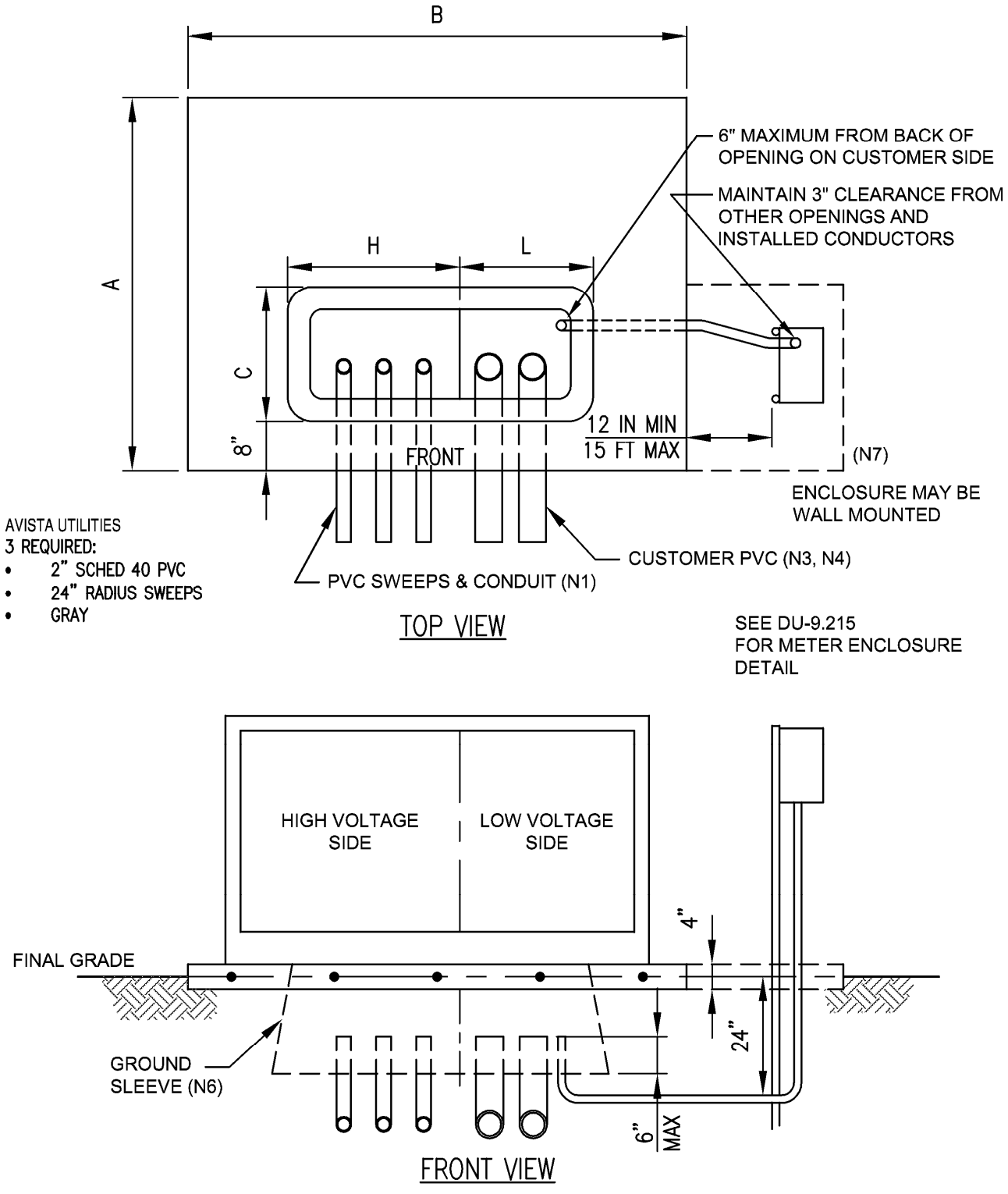

Figure 26- Three Phase Transformer Concrete Pads

3-PHASE KVA	DIMENSIONS IN INCHES					UNIT ASSEMBLY
	A	B	C	H	L	
45-500	80	90	18	40	25	GNDSLV3
750-1500	90	132	24	40	25	GNDSLV3LRG

Table 5- Three Phase Transformer Concrete Pad Dimensions

NOTES:

N1. Direction of entry of high voltage conduits may vary according to the job requirements.

N2. Service conduits must be installed prior to forming and pouring the pad to avoid undermining the pad.

N3. Service conduits must be confined to the low voltage side of the window.

N4. When the number of secondary conductors exceeds the limits in DU-5.124, Avista Utilities will provide a secondary enclosure.

N5. A ground sleeve will be supplied by Avista Utilities. It shall be centered left to right in the pad.

N6. For transformers larger than 500 kVA, the customer will be required to provide a larger concrete pad.

N7. The meter pedestal shall be located as specified by Avista Utilities Electric Meter Shop. The rigid upright steel conduits for metering enclosure shall be set in concrete and be capped with steel cap.

N8. Pad shall be located and oriented as specified by Avista Utilities (R2).

N9. Pad shall be constructed on firm undisturbed or well-compacted earth, shall be bedded on 3" of compacted ¾" gravel and shall be level.

N10. Concrete shall be 5-bag mix with 3/4 inch maximum size aggregate. Top surface shall be broom finished. Edges shall be rounded.

N11. Concrete shall be at least 4 inches thick and shall be reinforced at half the depth with #4 rebar on 12 inch centers each way. Reinforcing extending around window shall consist of a minimum of 2 rebars.

N12. 2" steel pipe poles should be bonded to transformer ground.

N13. Concrete pad installations must be inspected by Avista before pad is poured and again after pad is poured.

N14. Install 1" conduit for metering 6" maximum from back of opening on customer side.

REFERENCES:

R1. Avista Utilities Electric Service and Meter Requirements manual.

R2. Refer to Clearances to Other Equipment, Buildings, and Swimming Pools DU-4.222.

R3. Refer to Underground Standard DU-5.120.

R5. Refer to DU-9.215 Pedestal Mounted Meter Enclosure.

3.4.2 Pedestal Mounted Meter Enclosure – For Dedicated Transformer

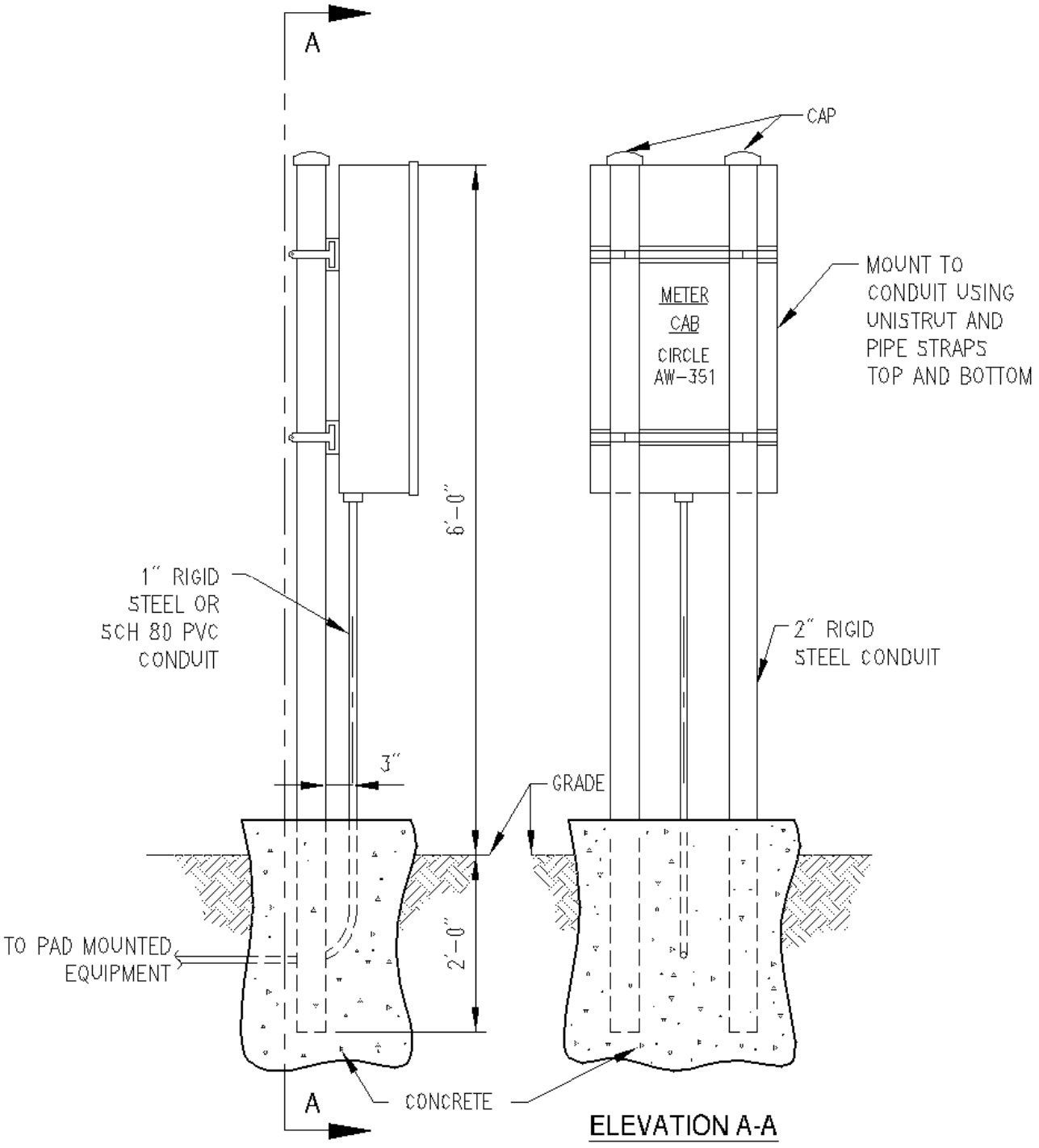

Figure 27- Pedestal Mounted Meter Enclosure for Dedicated Transformer

3.4.3 Secondary Enclosures

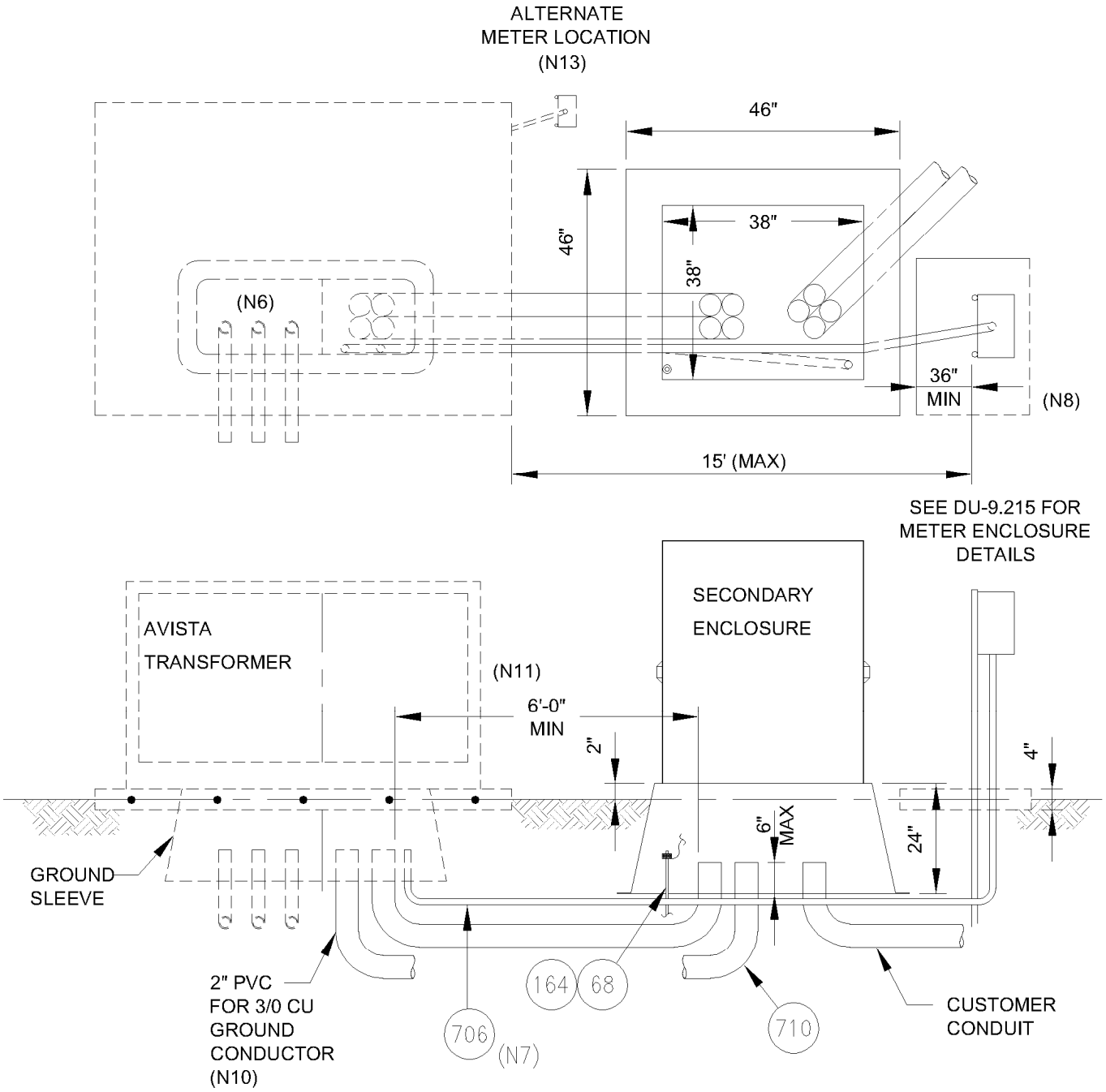

PREFERRED - SECONDARY ENCLOSURE FIBERGLASS BOX PAD

Figure 28- Secondary Enclosure Fiberglass Box Pad

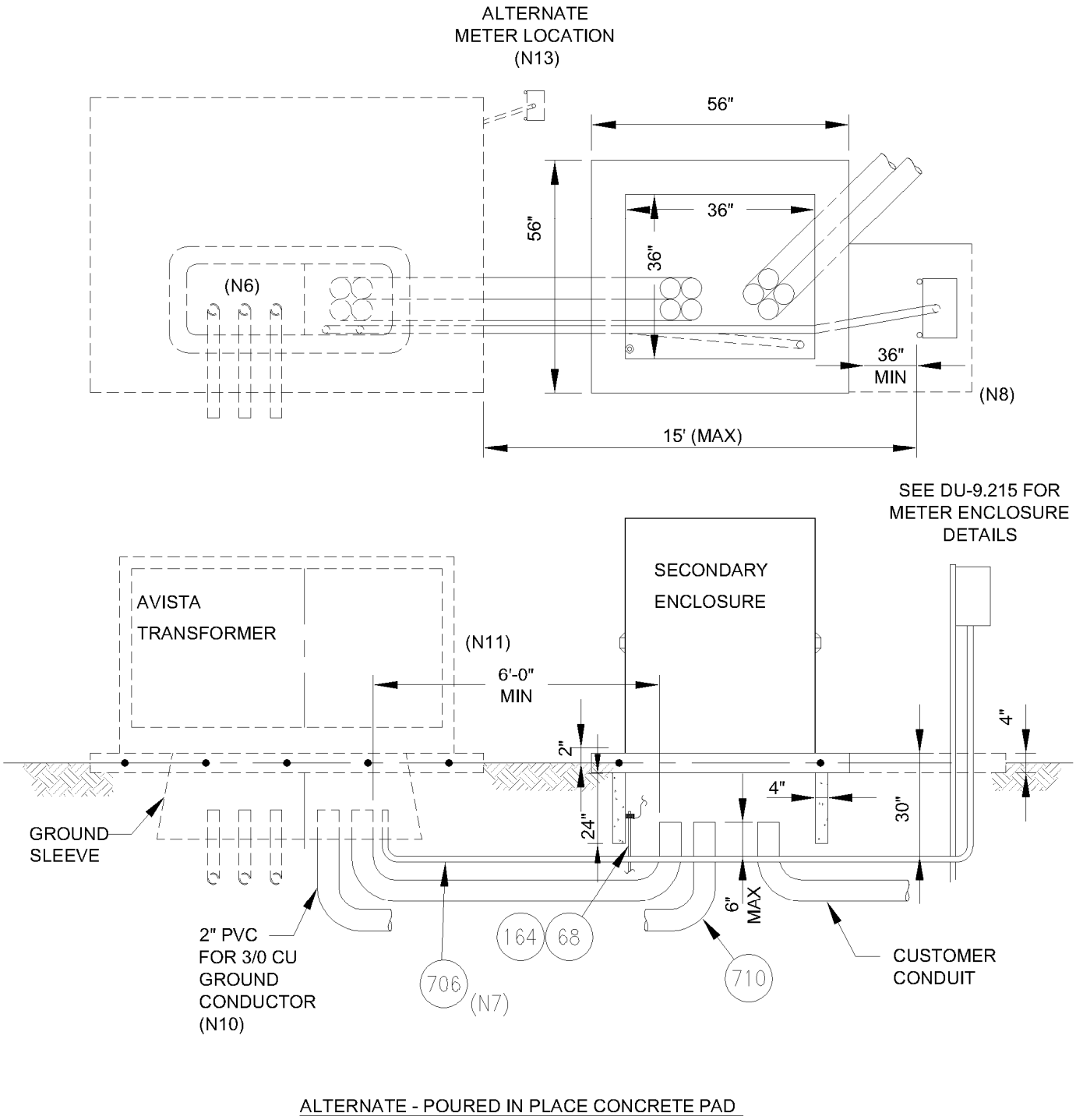

ALTERNATE - POURED IN PLACE CONCRETE PAD

Figure 29- Secondary Enclosure Poured In Place Concrete Pad

NOTES:

N1. When the number of secondary conductors exceeds the limits in DU-5.124, Avista will provide a standard 3000A secondary enclosure and box pad. Sizes other than the standard enclosure and box pad shall be provided by the customer.

N2. Pad shall be located and oriented as specified by Avista Utilities (R2). The bus in the secondary enclosure will be the point of service as defined in Avista Utilities rates and tariffs.

N3. Pad shall be constructed on firm undisturbed or well-compacted earth, shall be bedded on gravel and shall be level.

N4. Concrete shall be 5-bag mix with 3/4 inch maximum size aggregate. Top surface shall be broom finished. Edges shall be rounded.

N5. Concrete shall be at least 4 inches thick and shall be reinforced at half the depth with #4 rebar on 6 inch centers each way. Reinforcing shall extend around window.

N6. Direction of entry of utility conduits may vary according to the job requirements.

N7. Conduits must be installed before fiberglass box pad installation or before forming and pouring the pad to avoid undermining the pad.

N8. The meter pedestal shall be located as specified by Avista Utilities. The rigid conduits shall be set in concrete. Avista Utilities Meter Shop will determine CT applications. Meter location may vary with specific application. Leave room to open enclosure doors.

N9. Conduit between transformer and enclosure may be a gutter in some applications.

N10. A separate ground conductor (3/0 copper) must be installed between the transformer ground rod and the enclosure ground rod.

N11. Area between transformer concrete pad and secondary enclosure box pad or concrete pad can be concrete. Leave enough room for setting transformer.

N12. Seal the source side conduit where customer conduits enter a building. Fire barrier water-tight sealant SN 668-0600 with fire barrier packing material SN 668-0601 if needed.

N13. Alternate meter location must be approved by Avista before installation.

REFERENCES:

R1. Avista Utilities Electric Service and Meter Requirements manual.

R2. Refer to DU-5.020, Transformer Clearances.

R3. Refer to DU-5.124, Secondary Enclosure Padmount.

R4. Refer to DU-5.122, Concrete Pads Three-Phase Transformers.

R5. Refer to DU-9.215, Pedestal Mounted Meter Enclosure.

3.4.4 Padmounted Secondary Enclosure

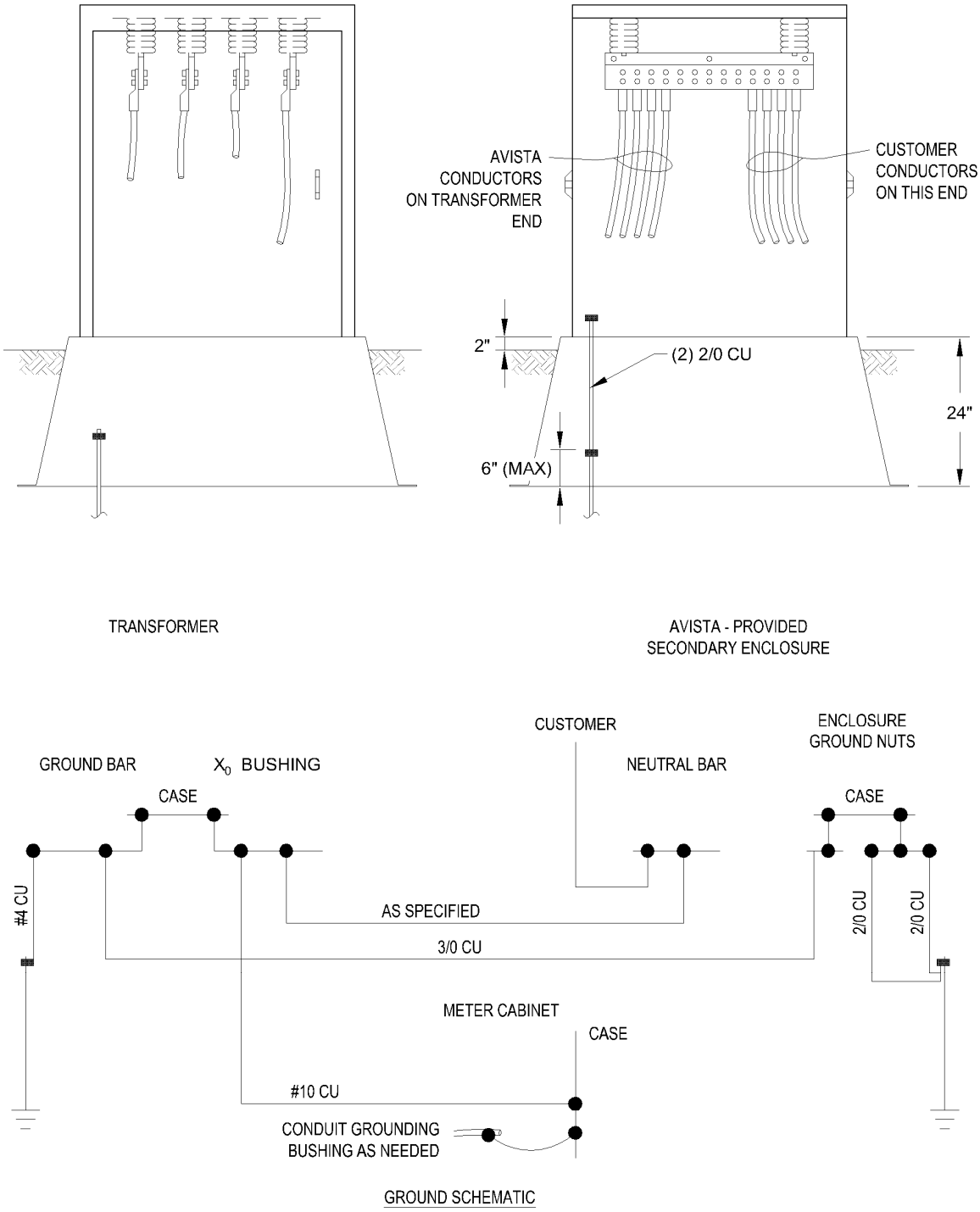

Figure 30- Padmounted Secondary Enclosure

AVISTA Utilities Distribution Standards DU-5.124 ESR Page 1 of 3

TRNSF KVA	FULL LOAD AMPS	SEC VOLTS	REC MAX CUST SEC WIRES PER PHASE FROM TRNSF (N6)	CONDUITS FROM TRNSF TO ENCL	PHASE & NEUTRAL WIRES FROM TRANSF TO SEC ENCLOSURE (N3, N8)
45	125	208Y/120	3	2-3” PVC	1 x 2/0 AL Quadruplex
75	210	208Y/120	3	2-3” PVC	1 x 350 AL Quadruplex
112.5	315	208Y/120	3	2-4” PVC	1 x 750 AL (500 CU) PH & 1 x 350 Neut
150	415	208Y/120	3	3-4” PVC	2 x 350 AL Quadruplex
225	625	208Y/120	4	3-4” PVC	2 x 750 AL (500 CU) PH & 2 x 350 Neut
300	835	208Y/120	6	5-4” PVC	3 x 750 AL (500 CU) PH & 3 x 350 Neut
500	1390	208Y/120	6	7-4” PVC	5 x 750 AL (500 CU) PH & 5 x 350 Neut
750	2080	208Y/120	8	9-4” PVC	7 x 750 AL (500 CU) PH & 7 x 350 Neut
1000	2775	208Y/120	9	9-4” PVC	9 x 750 AL (500 CU) PH & 9 x 350 Neut
45	54	480Y/277	3	2-3” PVC	1 x 2/0 AL Quadruplex
75	90	480Y/277	3	2-3” PVC	1 x 2/0 AL Quadruplex
112.5	135	480Y/277	3	2-3” PVC	1 x 2/0 AL Quadruplex
150	180	480Y/277	3	2-3” PVC	1 x 4/0 AL Quadruplex
225	270	480Y/277	4	2-4” PVC	1 x 350 AL Quadruplex
300	360	480Y/277	6	2-4” PVC	1 x 750 AL (500 CU) PH & 1 x 350 Neut
500	600	480Y/277	6	3-4” PVC	2 x 750 AL (500 CU) PH & 2 x 350 Neut
750	900	480Y/277	8	4-4” PVC	3 x 750 AL (500 CU) PH & 3 x 350 Neut
1000	1200	480Y/277	9	6-4” PVC	4 x 750 AL (500 CU) PH & 4 x 350 Neut
1500	1800	480Y/277	9	6-4” PVC	6 x 750 AL (500 CU) PH & 6 x 350 Neut

Table 6- Conduits and Conductors From Transformer to Secondary Enclosure

NOTES:

N1. When the customer has more cables to terminate than the recommended number of cables per phase from the transformer, as shown in the table above, a padmount secondary enclosure shall be installed. The Avista provided secondary enclosure should be placed onto a fiberglass box pad (R3) where conditions permit. If use of a box pad for the secondary enclosure is not practical, the customer shall provide a concrete pad for the transformer and the secondary enclosure (R4).

N2. The customer must provide conduits between the transformer and the secondary enclosure to accommodate the connecting cables.

N3. Three-phase conductors and one neutral conductor shall be installed in each conduit.

N4. Install cables shown in the table above to obtain full transformer capacity.

N5. Bond the enclosure case to the enclosure ground rod with two - 2/0 conductors.

N6. The customer's cables should be no larger than 750 CU or 1000 AL when terminated in the secondary enclosure.

N7. Avista will furnish and install lugs on the secondary and service conductors and land those conductors on the secondary enclosure terminals.

NOTES (cont.):

N8. This column lists the number and size of secondary conductors recommended between the transformer and junction enclosure. It does not apply to longer service runs where voltage drop may be a consideration. These recommendations are based on the ampacities listed in DU-7.101. The secondary conductors are sized to meet both the summer and winter ratings of the transformer, taken as 114% and 160% of the OA rating respectively.

N9. Transformer ground rod and secondary enclosure must be bonded together with a 3/0 CU conductor.

N10. Table values allow ability to go up one transformer size.

N11. Where customer conduits enter a building, the secondary conduits must be sealed below the secondary enclosure and where the conduits enter the building wall. Use fire barrier water-tight sealant SN 668-0600 with fire barrier packing material SN 668-0601.

N12. When a secondary enclosure is installed, the point of delivery will generally be the bus bars in the secondary enclosure (R4). Avista will install lugs at point of delivery. No CT's will be installed in secondary enclosures.

N13. Secondary enclosure has not been UL approved and is owned by Avista.

REFERENCES:

R1. NESC 374, NESC 384

R2. NESC 96C

R3. Refer to DU-5.123, Fiberglass or Concrete Pads Secondary Enclosure.

R4. Refer to Avista Utilities Electric Service and Meter Requirements manual.

R5. Refer to DU-7.203, Heavy Duty Lugs.

R6. Refer to DU-7.101, Secondary Cable Characteristics.

R7. Refer to DU-5.122, Concrete Pads Three-Phase Transformer.

Conduit Entrance Single-Phase Transformer

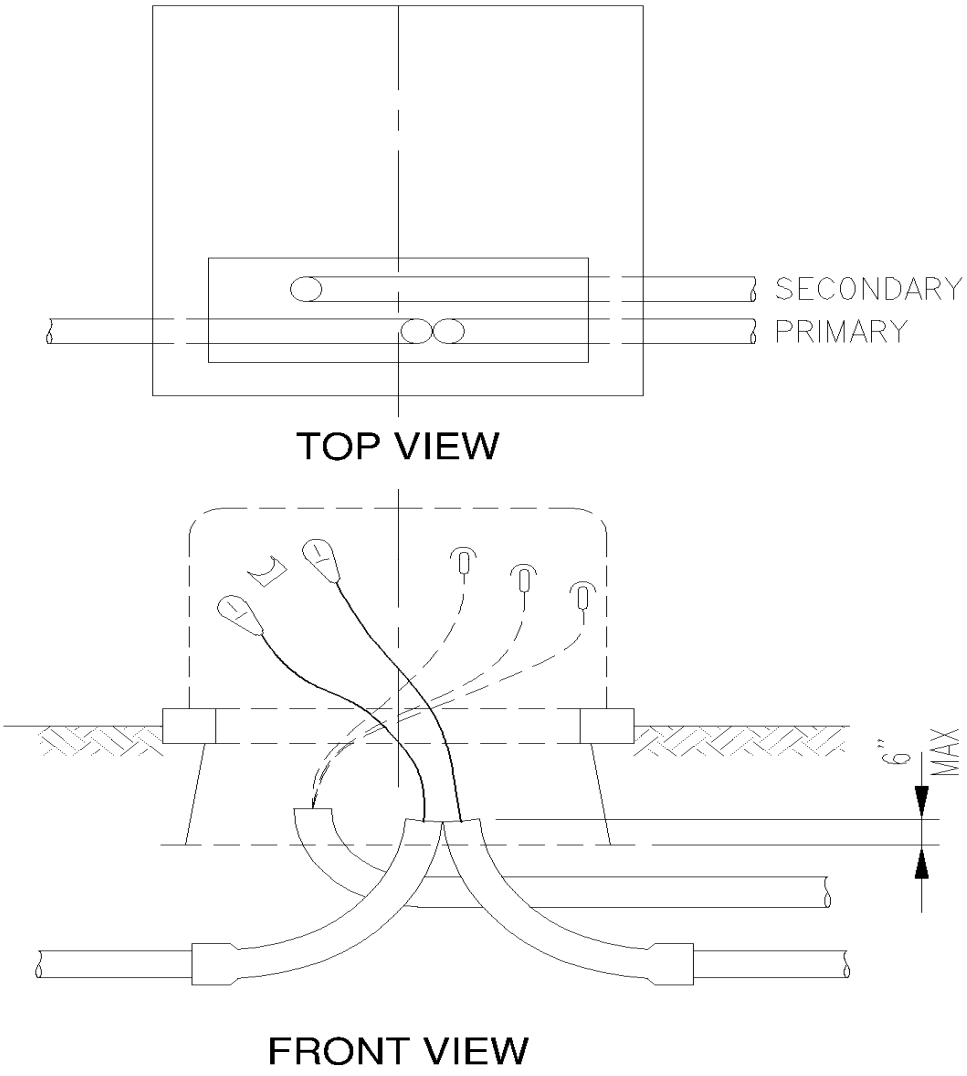

Figure 31- Conduit Entrance Single-Phase Transformer

NOTES:

N1. Backfill trench for 8 to 10 feet, one foot deep, on all sides of enclosure to anchor primary conduit (R5).

N2. Seal unused conduits with plastic conduit caps.

N3. Other conduit arrangements may be required depending on the situation.

REFERENCES:

R1. NESC 321B.

R2. NESC 360B.

R3. NESC 361A.

R4. NESC 363A.

R5. Refer to DU-3.202 and DU-3.212 for junction enclosures.

Conduit Entrance 1&2-Phase Padmounted Junction Enclosures

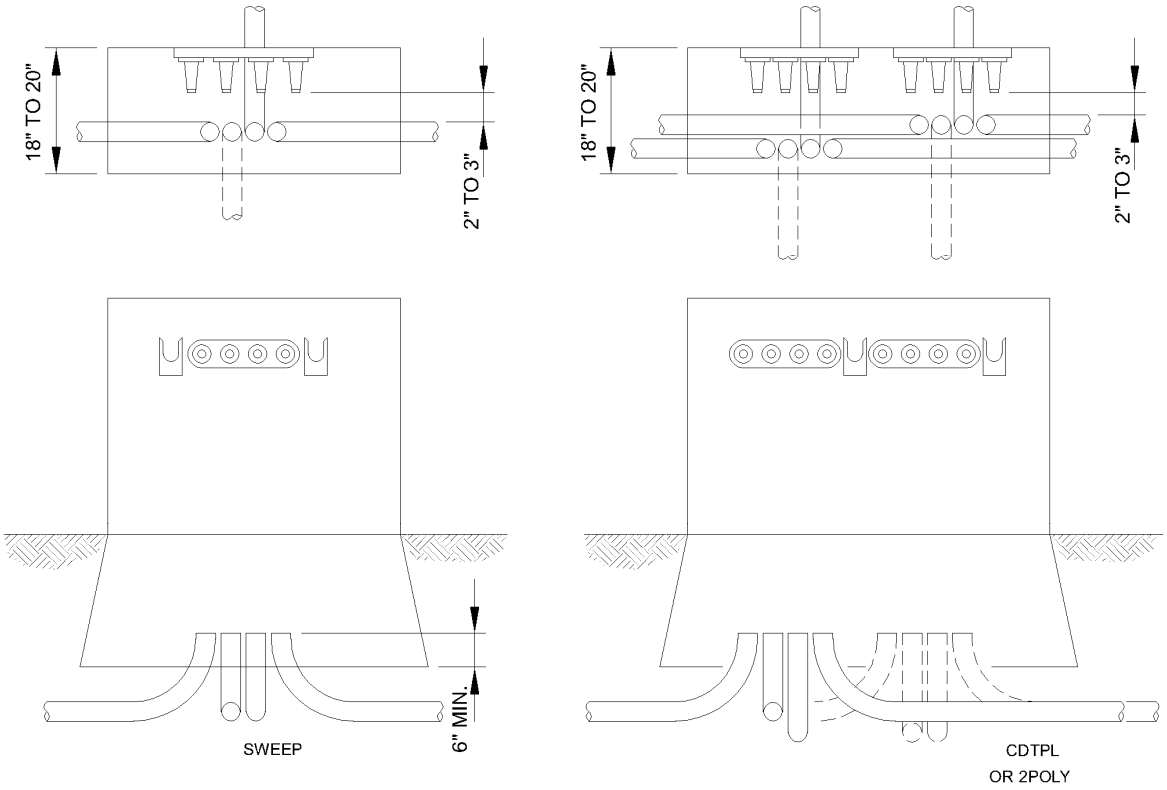

Figure 32- Conduit Entrance 1 & 2 Phase Padmounted Junction Enclosures

NOTES:

N1. Backfill trench for 8 to 10 feet, one foot deep, on all sides of enclosure to anchor primary conduit (R5).

N2. Seal unused conduits with plastic conduit caps.

N3. Other conduit arrangements may be required depending on the situation.

REFERENCES:

R1. NESC 321B.

R2. NESC 360B.

R3. NESC 361A.

R4. NESC 363A.

R5. Refer to DU-3.202 and DU-3.212 for junction enclosures.

3.4.5 Conduit Entrance 3-Phase Padmounted Junction Enclosures

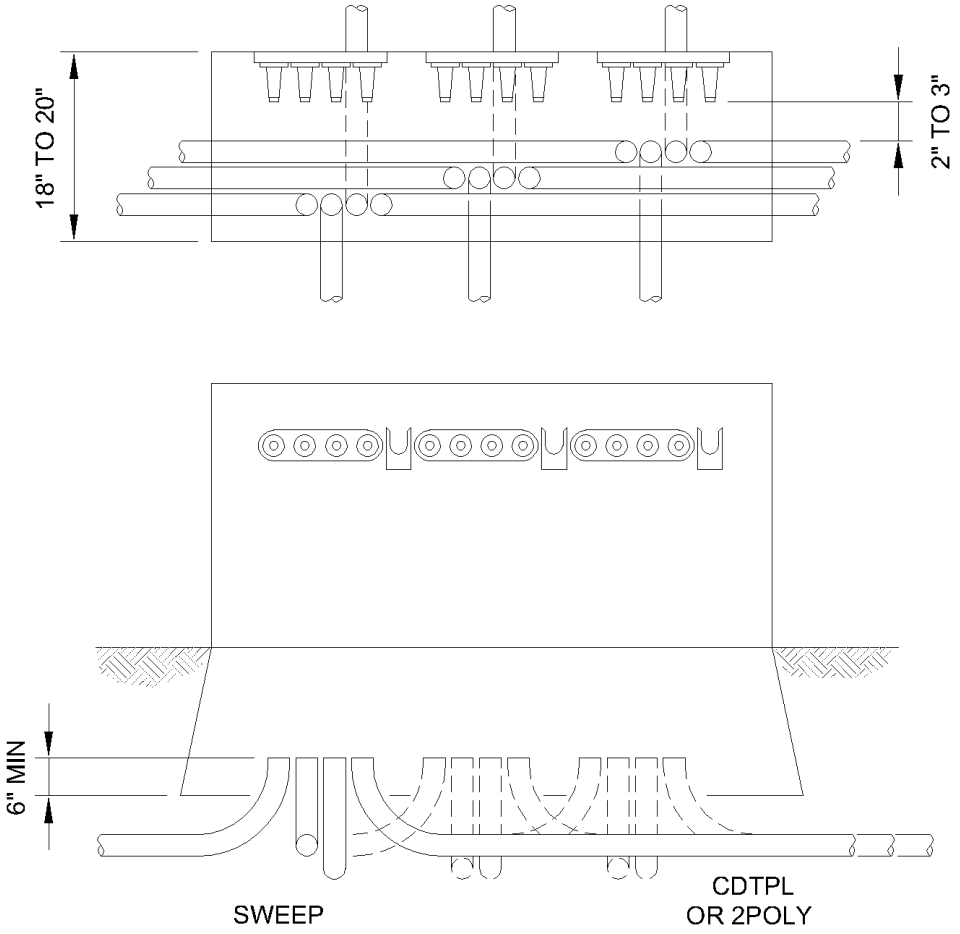

Figure 33- Conduit Entrance 3-Phase Padmounted Junction Enclosures

NOTES:

N1. Backfill trench for 8 to 10 feet, one foot deep, on all sides of enclosure to anchor primary conduit (R4).

N2. Seal unused conduits with plastic conduit caps.

N3. Other conduit arrangements may be required depending on the situation.

REFERENCES:

R1. NESC 321B.

R2. NESC 360B.

R3. NESC 361A.

R4. NESC 363A.

R5. Refer to DU-3.202 and DU-3.212 for junction enclosures

4.3 METERING EQUIPMENT RATINGS AND TYPE

4.3.1 Approved Self-Contained Sockets

REQUIRED METERING EQUIPMENT		
SERVICE VOLTAGE	**SERVICE CAPACITY AMPERES**	**METERING EQUIPMENT**
Single-phase	Up to 100	4 terminal 100 amp socket
	101 to 200	4 terminal 200 amp socket MCC required for commercial MCC optional for residential
	201 to 400	4 terminal 400 amp MCC socket
	401 to 1,000 Residential	See 1 Phase instrument transformer metering. DO-7.313 1/3, Section 4.4.8 Electric Serv. Requirements
4 Wire three-phase 120-240 Delta identify high leg to ground with orange tape and be connected to right side of meter or CT platform	Up to 200	7 terminal, 200 amp, manual circuit closing socket
	201 to 1,000	See 3 Phase instrument transformer metering. DO-7.313 2/3, Section 4.4.8 Electric Serv. Requirements
(Network) Single-phase 120-208 Wye 3 Wire	Up to 100	5 terminal, 100 amp socket
	101 to 200	5 terminal, 200 amp socket
	201 to 1,000	Instrument transformer metering Avista installs meter and enclosure
4 Wire, three-phase 120-208 Wye	Up to 200	7 terminal, 200 amp MCC socket
	Over 200	See 3 Phase instrument transformer metering. DO-7.313 2/3, Section 4.4.8 Electric Serv. Requirements
4 Wire, three-phase 277-480 Wye (N1)	Up to 200	**7 terminal, 200 amp MCC safety socket**
	Over 200	See 3 Phase instrument transformer metering. DO-7.313 2/3, Section 4.4.8 Electric Serv. Requirements
Switchgear All Voltages	All	Manufacturer supplied 13 terminal Pnl Mounted Socket w/ Test Switch Mounts
		Avista Supplies Flush Mounted 13 Terminal Meter w/ Trim Can

Table 7- Self-Contained Socket Required Metering Equipment

NOTES:

N1. Three-Wire, three-phase, 480 volt delta is no longer available on new services.

N2. One hundred (100) amp, three-phase, four-wire sockets are not allowed because of inadequate clearances.

N3. 480V Self-Contained require a safety socket.

APPROVED SELF-CONTAINED METER SOCKETS				
SERVICE CAPACITY (AMPS)	MANUFACTURER	4 TERMINAL	SOCKET TYPE 5 TERMINAL	7 TERMINAL
100	C/AW (MCC TYPE)	121314	121315	NOT APPROVED
	MILBANK	U3504-XL	U3504XL & 5T8K2	
AVISTA DOES NOT PULL WIRE INTO 100A SOCKETS				
200 (120/240V)	C/AW (MCC TYPE)	U264	U264 & 50365	U267
	MILBANK	U1211-RRL U3514-XL (OH Only)	U1211-RxL & K3866	U7423RXL U3517-XL(OH Only)
	L+G (MCC TYPE)	HQ-4G HQ-4GU HQ-4S	HQ-5 HQ-5U HQ-5S	HQ-7 (OH) HQ-7U (UG) HQ-7S (OH/UG)
200 (277/480V) (N3)	COOPER B-LINE	124TB (480V)		127TB
	SIEMENS			M527TB
320	MILBANK	U-3548-X(OH/UG) U1797X 0 K3L K2L	U1079R (OH)	
400 RESIDENTIAL AND COMMERCIAL SOCKETS (ALL NEED TO BE MCC)	C/AW	324 N U4042 MCC		
	MILBANK	U11290 0 K3L K2L U3251 0 200 CB		
	L+G	HQ-4D (OH)		
	CUTLER/HAMMER	UTH4300TCH UTH4300ACH		

Notes:

1. Commercial meter sockets not listed must be individually approved by Avista's meter department.

2. **Meter modules with slide type and horn style bypasses are not approved.**

3. 480V Self-contained require a safety socket.

4. Avista will not hook up overhead meter sockets being used for underground service, even if they have been approved by the local authority having jurisdiction – (They do not have adequate horizontal space).

4.3.2 Self-Contained In-Line Socket Diagrams

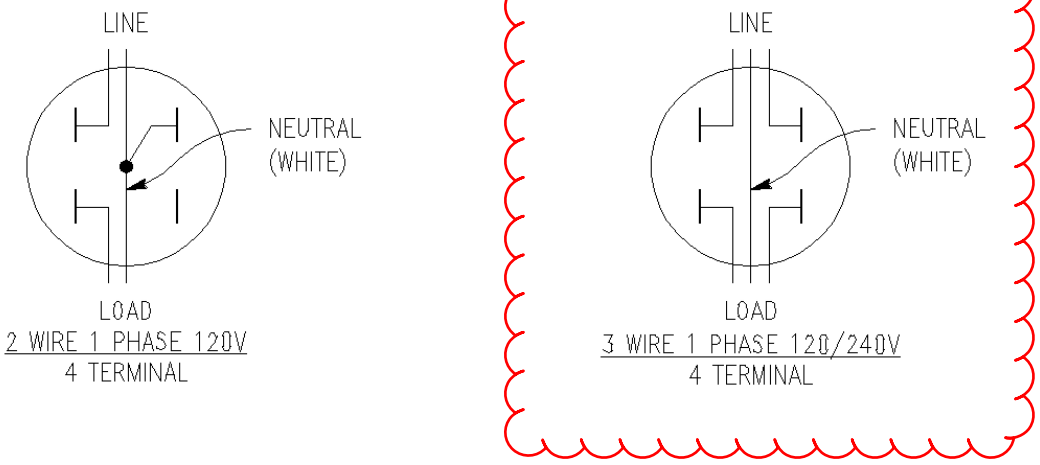

NOTE:

N1 ✳ SAFETY SOCKET 4 WIRE WYE 277/480V

Figure 34 - Self-Contained In-Line Meter Socket Diagrams

Approved EUSERC Rated Termination Enclosures (utility underground pull boxes)

Service Amperage	# of Phases	Buss type	Manufacture	Model #
201-400	1	Feed Thru	Cooper B-Line	R9000C
201-400	1	Feed Thru	Eaton	1UGPB400R
401-800	1	Feed Thru	Cooper B-Line	R9000E
401-800	1	Feed Thru	Eaton	1UGPB800R
801-1200	1	Feed Thru	Cooper B-Line	R9000F
801-1200	1	Feed Thru	Eaton	1UGPB1200R
1200	1	Feed Thru	Siemens	WT11200PU
201-400	3	Feed Thru	Cooper B-Line	R9000CC
201-400	3	Feed Thru	Eaton	3UGPB400R
401-800	3	Feed Thru	Cooper B-Line	R9000EE
401-800	3	Feed Thru	Eaton	3UGPB800R
801-1200	3	Feed Thru	Cooper B-Line	R9000FF
801-1200	3	Feed Thru	Eaton	3UGPB1200R
1200	3	Feed Thru	Siemens	WT31200PU
1600	3	Feed Thru	Erickson	TB-469N (NON- EUSERC)
201-400	1	Hor. Cross Buss	Siemens	WET1400BU
401-800	1	Hor. Cross Buss	Siemens	WET 1800BU
801-1200	1	Hor. Cross Buss	Siemens	WET11200BU
201-400	3	Hor. Cross Buss	Siemens	WET3400BU
401-800	3	Hor. Cross Buss	Siemens	WET3800BU
801-1200	3	Hor. Cross Buss	Siemens	WET31200BU

4.4.6 Notes

1. The area below the load side lugs is reserved for utility conductors only. Customer conductors cannot pass through the utility's section of the cabinet.
2. Terminating facilities for utility conductors shall be aluminum-bodied mechanical lugs with a range accepting a single #4AWG through 750KCMIL or two #1AWG through 250KCMIL conductors. Number of lugs for each current range is listed above.
3. Avista will supply and install line side lugs.
4. Lugs shall be secured to prevent turning or misalignment.
5. The minimum pull box access opening (W) is measured between the left and right.
6. Enclosure covers shall be removable, sealable, provided with two lifting handles, hinged and limited to the maximum size of 9 sqft. Note general sealing requirements above.
7. All customer conduit, sealable conduit, or solid bus bars must exit **above** utility side connections and all fittings must be weathertight type.
8. Utility conduits shall enter termination enclosure from the bottom.
9. Termination enclosure must be EUSERC rated and approved.

4.4.8 Single Phase Current Transformer Metering

1 PHASE CURRENT TRANSFORMER METERING
OVERHEAD AND UNDERGROUND
401 TO 800 AMPS RESIDENTIAL & COMMERCIAL

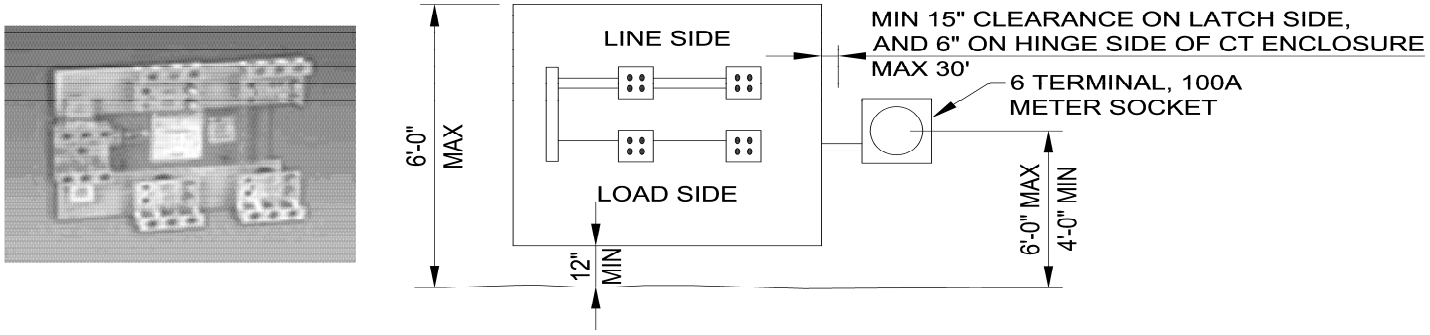

Figure 37- **1 Phase Current Transformer Metering 401 to 800 Amps**

CT Enclosure

- **Removable hinged door(s) w/sealing and locking provisions** *** Type 3R, ANSI 61 gray**

Service Ampacity	WxHxD	Cooper B-Line	Milbank	Hoffman
201-400 AMP	30X30X11 inches	303011RTCT	CT303011SC	A303011CT
401-800 AMP	36X48X11 inches	364811HRTCT	CT364811HC	A483611HCT

CT Landing Platforms
Part #'s or Equivalent

- **Forbar type ANSI C12.11 CT's** *** 600V, 50kA AIC**
- **Line & Load side Mechanical Lugs**

Service Ampacity	WxHxD	Cooper B-Line	Milbank
201-400 AMP	30X30X11 inches	6019 HAL	K4903
401-800 AMP	36X48X11 inches	6019 HEL	K4729

Approved 6 Terminal, 100A Meter Socket

Manufacturer	Part #
COOPER B LINE	U121315-50365
MILBANK	U3504XL Plus (2) 5T8K2

NOTES:

N1. The customer supplies and installs the current transformer enclosure, mounting base, meter enclosure. Avista supplies and installs the current transformers, instrument wiring and meter.
N2. Current transformer enclosure must be bonded and grounded per NEC requirements by customer.
N3. Avista will supply, install, and connect conductor to the line side only on UNDERGROUND services. The customer supplies, installs and connects conductor on OVERHEAD services.
N4. Customer supplies landing lugs for Avista conductors on UNDERGROUND services.
N5. CT landing platforms are rated on diversified load.
N6. Inside commercial grow operations cannot exceed 800 amps of true load on single phase service.

Garco Construction, Inc.

Phase	Description	Quan.	Unit	UNIT PRICES Labor	Material	Equip.	Garco Sub.	TOTALS Labor	Material	Equip.	Garco Sub.	TOTAL
	Power City Cost (See attached Quote)	1.0	LS				18,595	-			18,595	18,595
	Avista Cost (Email Attached)	1.0	LS				3,500	-			3,500	3,500
	NAC Cost (Email Attached)	1.0	LS				1,000	-			1,000	1,000
	Garco Excavation Cost (1 Wk Operator, Mini Excavator)	1.0	LS	2,040		1,243		2,040		1,243	-	3,283
	Concrete Transformer Pad (80"x90"x4" Thick sitting on (4) 18"x36" Sonotubes) (3 days 2 Laborers)	1.0	LS	2,329	750			2,329	750		-	3,079
		1.0	LS					-			-	-
		1.0	LS					-			-	-
		1.0	LS					-			-	-
				SUB-TOTALS				4,370	750	1,243	23,095	29,458
			ADD-ONS:	OH&P: on Garco (as subcontractor) self-performed work.				15.00% (of Labor, Material & Equip.)				954
				OH&P: on Garco (as subcontractor) subcontracted work				4.00% (of Subcontract)				924
											SUB-TOTAL	31,336
				Insurance				1.00% (of Subtotal)				313
				Bond Premium				0.75% (of Subtotal)				235
											SUB-TOTAL	31,884
				B & O Tax				0.47% (of Subtotal)				147
				TOTAL - POTENTIAL CHANGE ORDER								**$ 32,032**

SPECIFIC EXCLUSIONS:

1. WSST

E. 3327 OLIVE
SPOKANE, WA 99202
PHONE: (509) 535-8500
FAX: (509) 535-4665

PROPOSAL

PROPOSAL SUBMITTED TO **Garco Construction**	**DATE** **4/12/18**
STREET **4114 E Broadway**	**JOB NAME** **RFP03-Electric for Verizon Colt**
CITY, STATE, AND ZIP CODE **Spokane WA 99202**	**JOB LOCATION** **507 N Howard St Spokane, WA 99201**
ATTN: **Josh Grigsby and Sean LaRue**	**PHONE:** **509-535-4688**

Josh and Sean,
Thank you for the opportunity to provide pricing for the above mentioned project. As always, if I can provide any further information or clarification please do not hesitate to contact me.

General Inclusions

- Conduit will be stubbed up on the outside of the existing enclosure.
- All above ground exposed conduit to be Rigid Steel or liquid tight flex as required.
- Below grade conduit to be Sch 40 PVC.
- Secondary conductors are included as THHN.
- Demo of existing electrical devices
- Reconnection of existing colt/cow receptacle.
- Small strut rack for new electrical equipment.
- Removal of existing wood pole.

General Exclusions

- Tax.
- All Excavation
- Removal or patching of Concrete or Asphalt.
- Overtime.
- Sales tax.
- Bond is available by request.
- All Concrete for equipment and housekeeping pads.

Total Price $18,595.00

Thank you for the opportunity.

Steve Gilbertz
509-481-0465
PM/Estimator

Proposal Acceptance:		
Authorized Customer Signature	Printed Name	Date

POWER CITY Electric

3327 E. Olive, Spokane WA 99202
(509) 535-8500, Ext 1016
fax (509) 535-8598

DATE	12-Apr-18
JOB	MOD005-RFP-03-Verizon Connection
PROJECT	Howard Street Promenade

	DESCRIPTION	AMT.		MTRL.	LABOR	MTRL. EXT.	LBR. EXT.	EXTENSION
				$ -	$0.00	$0.00	$0.00	$0.00
	Estimation	1		$ 3,058.82	$10,197.00	$3,058.82	$10,197.00	$13,255.82
	Gear Quote	1		$ 1,250.00	$0.00	$1,250.00	$0.00	$1,250.00
				$ -	$0.00	$0.00	$0.00	$0.00
				$ -	$0.00	$0.00	$0.00	$0.00
				$ -	$0.00	$0.00	$0.00	$0.00
				$ -	$0.00	$0.00	$0.00	$0.00
				$ -	$0.00	$0.00	$0.00	$0.00
				$ -	$0.00	$0.00	$0.00	$0.00
				$ -	$0.00	$0.00	$0.00	$0.00
				$ -	$0.00	$0.00	$0.00	$0.00
				$ -	$0.00	$0.00	$0.00	$0.00
				$ -	$0.00	$0.00	$0.00	$0.00
				$ -	$0.00	$0.00	$0.00	$0.00
				$ -	$0.00	$0.00	$0.00	$0.00
				$ -	$0.00	$0.00	$0.00	$0.00
				$ -	$0.00	$0.00	$0.00	$0.00
				$ -	$0.00	$0.00	$0.00	$0.00
				$ -	$0.00	$0.00	$0.00	$0.00
				$ -	$0.00	$0.00	$0.00	$0.00
				$ -	$0.00	$0.00	$0.00	$0.00
				$ -	$0.00	$0.00	$0.00	$0.00
				$ -	$0.00	$0.00	$0.00	$0.00
				$ -	$0.00	$0.00	$0.00	$0.00
				$ -	$0.00	$0.00	$0.00	$0.00
				$ -	$0.00	$0.00	$0.00	$0.00
				$ -	$0.00	$0.00	$0.00	$0.00
		SUBTOTAL			$0.00	$4,308.82	$10,197.00	$14,505.82
								165.0

DIRECT JOB EXPENSES		
Truck/Trailer	**All Terrain cart**	**Lifts**
$509.85	$87.15	$375.46
SUPERVISION	**Sm tools/Consum**	**PERMIT**
	$356.90	$130.00
HOUSE KEEPING	**Safety**	**Large Tools**
$101.97	$101.97	$0.00

MATERIAL TOTAL	$4,308.82
LABOR TOTAL	$10,197.00
JOB EXPENSE	$1,663.29
SUBTOTAL	$16,169.11
OH & P	$2,425.37
TOTAL	$18,594.48

DESCRIPTION OF WORK;

JOB #2013: ID	RIVERFRONT PARK
JOB NAME	RIVERFRONT PARK-HSP
EST. #03: ID	RIVERFRONT HSP
ESTIMATE	RFP 03-added primary conduits
PRINTED	4/10/2018 3:45:12 PM
DATA SET #1:	Comm Indust UPC_EST_NECA ...
NOTES	

4/10/18
Power City Electric, Inc
3327 E. Olive Ave.
Spokane, WA 99202
509.535.8500
FAX: 509.535.8598
sgilbertz@powercityelectric.com

Item				Material	Labor
Size	**Item Desc**	**Qty**	**UOM**	**Mat Ext**	**Lbr Ext**
Section : Section 003: 3 - DEMO existing					
	triplex removal	1.00		0.00	2.5000
200A	HD 3P FUSED 240V N3R	1.00	EACH	0.00	7.7000
100A	GD 4PSN 240V NEMA 3R	1.00	EACH	0.00	4.4000
Subtotals for Section : Section 003: 3 - DEMO existing				0.00	14.6000
Section : Section 004: 4 - New Install					
2 1/2"	LIQUIDTITE ANGLE CON	2.00	EACH	300.97	0.8000
2 1/2"	LIQUIDTITE STR CONN	2.00	EACH	234.65	0.8000
3/4X8	COPPER GROUND ROD	2.00	EACH	61.45	4.0000
	core drill	3.00		60.00	3.7500
2 1/2"	ALUM MYERS HUBS	1.00	EACH	14.59	1.7000
2 1/2"	LIQUIDTITE CONDUIT	10.00	FEET	117.37	4.0000
2 1/2"	GRC	5.00	FEET	57.15	0.7500
2"	PVC 90 SWEEP RADIUS	6.00	EACH	49.47	3.9000
2"	ALUM MYERS HUBS	2.00	EACH	15.31	3.2000
2"	GRC	2.00	FEET	12.12	0.2200
3/4.	GROUND ROD CLAMP	2.00	EACH	12.01	0.0000
	Existing COLT recep install	1.00		5.00	1.0000
250	THHN STR CU	135.00	FEET	611.84	4.3200
2 1/2"	PVC SCH 40 90 ELBOW	2.00	EACH	6.88	1.6000
2 1/2"	PVC END BELLS	1.00	EACH	2.74	0.2600
2"	PVC END BELLS	6.00	EACH	13.90	1.3800
1.	THHN STR CU	15.00	FEET	23.66	0.3000
2 1/2"	PVC ADPT/FEMALE	1.00	EACH	1.41	0.4000
2 1/2"	PVC SCH 40 UGRD	10.00	FEET	14.00	0.4750
2 1/2"	UNISTRUT STRAP	2.00	EACH	2.56	0.1000
3.	THHN STR CU	45.00	FEET	44.34	0.7200
2"	PVC SCH 40 UGRD	900.00	FEET	801.00	40.5000
4.	THHN STR CU	5.00	FEET	3.97	0.0750
2 1/2"	PVC COUPLING	1.00	EACH	0.76	0.0000
6.	BARE CU SOLID	15.00	FEET	8.46	0.1950
	TRUE TAPE	930.00	FEET	20.00	0.9300
	3" WARNING TAPE MAG.	300.00	FEET	3.00	3.0000
2"	PVC FIELD BENDS	6.00	EACH	0.00	8.7000
2 1/2"	PVC FIELD BENDS	1.00	EACH	0.00	1.8000
2 1/2"	CUT/THREAD-LABOR	1.00	EACH	0.00	0.8000
2.	KO LABOR ONLY	4.00	EACH	0.00	2.8000
2 1/2.	KO LABOR ONLY	5.00	EACH	0.00	3.7500
6.	WIRE TERM-LABOR ONLY	1.00	EACH	0.00	0.1400
4.	WIRE TERM-LABOR ONLY	2.00	EACH	0.00	0.3000
2.	WIRE TERM-LABOR ONLY	4.00	EACH	0.00	0.6400
1.	WIRE TERM-LABOR ONLY	6.00	EACH	0.00	1.0200
250	WIRE TERM-LABOR ONLY	12.00	EACH	0.00	3.2400
	Ground Sleeve installation	1.00		0.00	3.5000
5/8X8	COPPER GROUND ROD	1.00	EACH	0.00	2.0000

JOB #2013: ID	RIVERFRONT PARK
JOB NAME	RIVERFRONT PARK-HSP
EST. #03: ID	RIVERFRONT HSP
ESTIMATE	RFP 03-added primary conduits
PRINTED	4/10/2018 3:45:12 PM
DATA SET #1:	Comm Indust UPC_EST_NECA ...
NOTES	

4/10/18

Power City Electric, Inc
3327 E. Olive Ave.
Spokane, WA 99202
509.535.8500
FAX: 509.535.8598
sgilbertz@powercityelectric.com

Item				Material	Labor
Size	**Item Desc**	**Qty**	**UOM**	**Mat Ext**	**Lbr Ext**
100A	16 CIRCUIT-PANEL BD	1.00	EACH	0.00	7.4400
200A	M-SOCKET RING TYPE	1.00	EACH	0.00	4.0000
200A	HD 3P FUSED 600V N3R	1.00	EACH	0.00	7.7000
100A	CLS J TD 600V FUSE	3.00	EACH	0.00	0.1500
Subtotals for Section : Section 004: 4 - New Install				2,498.62	126.3550
Section : Section 005: 5 - NEW RACK					
	concrete	1.00		200.00	8.0000
	sauna tube(no concrete or rebar)	4.00		120.00	4.0000
2"	PIPE PLUG	4.00	EACH	39.39	0.2000
2"	GRC	20.00	FEET	121.20	2.2000
	CHANNEL 12GA 1-5/8"	40.00	FEET	60.10	4.8000
2"	UNISTRUT STRAP	10.00	EACH	11.07	0.4000
	demo wood pole	1.00		0.00	4.0000
Subtotals for Section : Section 005: 5 - NEW RACK				551.76	23.6000
Grand Totals				3,050.38	164.5550

Prepared By:
Phil Graves
Stoneway Electric Supply Co
Spokane Dist Project Sales Dept Mgr
402 N Perry Street
Spokane,WA
phil.graves@stoneway.com

Proposal Name: RIVER PARK PAVILION

Quote Name: RIVERFRONT PARK MODERNIZATION

Proposal Number: P-180319-174287

Quote Number: Q-218586

Quote Date: April 12, 2018

Through Addenda Number: 0

Sales Representative:

Conditions of Sale

**Stoneway Standard Terms and Conditions Apply* FOB POS – FREIGHT ALLOWED*

Clarifications and Exceptions

Price includes (2) TR125R fuses and (1) U264 meter socket

LOT PRICE $1,250.00

Seq #	Qty	Product Description
1	1	**Designation :** SERV DISCO **Product Details:** 1-H224NRB-SWITCH FUSIBLE HD 240V 200A 2P NEMA3R Enclosure Type: Type 3R Interrupting Rating (AIR): 50kA Fuse Capability: Class R Max System Voltage: 240 VAC Switch Current Rating: 200 Amp Number of Switching Poles: 2 Pole w/ Neutral Ground Lug: AL/CU

Seq #	Qty	Product Description
2	1	**Designation :** P1 **Product Details:** 1-NQ MB PNLB (INT,ENCL)-NQ Panelboard Consisting of 120/240V 1Ph 3W 60Hz SCCR: 22kA Feeders Series Rated w/ QD Circuit Breaker Suitable For Use As Service Entrance UL Single Main: 200A/2P QD Circuit Breaker Incoming Conductors: 1 - #4 - 300 kcmil AL Ground Bar Bus: Aluminum: Tin Plated 30 Circuit Interior Type 3R/5/12Box: 44H x 20W x 6.5D Incoming: Bottom Trim w/ Box Box Cat No: MH44WP Ref. Drawing: PBA711 Feeders: 3 - 50A/2P QOB 3 - 20A/1P QOB Standard Solid Neutral,Standard Ground Bar **Estimated days to ship, excluding transit:** 15 working days after customer release to manufacturer. See Conditions of Sale.

Josh Grigsby

From: Bosshardt, Mike <Mike.Bosshardt@avistacorp.com>
Sent: Wednesday, March 28, 2018 4:00 PM
To: Steve Gilbertz; Sean LaRue
Cc: Josh Grigsby; Jack Schneider
Subject: RE: [External] RE: PAV - RFPs 2 and 3

Steve,

Avista's costs will be roughly $3,500 for the new line extension.

Mike Bosshardt
Customer Project Coordinator

PO Box 3727 MSC-46
Spokane, WA 99220
1411 E Mission Ave. MSC-XX
Spokane, WA 99202
P 509.495.2058
C 509.828.7281
http://www.avistautilities.com

CONFIDENTIALITY NOTICE: The contents of this email message and any attachments are intended solely for the addressee(s) and may contain confidential and/or privileged information and may be legally protected from disclosure. If you are not the intended recipient of this message or an agent of the intended recipient, or if this message has been addressed to you in error, please immediately alert the sender by reply email and then delete this message and any attachments.

From: Steve Gilbertz [mailto:SGilbertz@PowerCityElectric.com]
Sent: Tuesday, March 27, 2018 2:33 PM
To: Sean LaRue <seanl@garco.com>; Bosshardt, Mike <Mike.Bosshardt@avistacorp.com>
Cc: Josh Grigsby <joshg@garco.com>; Jack Schneider <JSchneider@nacarchitecture.com>
Subject: [External] RE: PAV - RFPs 2 and 3

You bet. How quick do you need it Sean? Let me know if you want me to place it ahead of the Pavilion Admin budget

Thanks

Steve Gilbertz | Project Manager
Direct (509)481-0465 | Office (509)535-8500 X 1052
SGilbertz@Powercityelectric.com
3327 E. Olive Ave. | Spokane, WA 99202

the power to do more

From: Sean LaRue [mailto:seanl@garco.com]
Sent: Tuesday, March 27, 2018 11:45 AM
To: Steve Gilbertz; Bosshardt, Mike
Cc: Josh Grigsby; Jack Schneider
Subject: FW: PAV - RFPs 2 and 3

Steve/Mike,

Can I please get pricing per the attached RFP for the COLT/COW.

Let me know if you have any questions.

Thanks,

Sean LaRue
Garco Construction | Project Manager
E. 4114 Broadway Ave. Spokane, WA. 99202
O. (509) 535-4688 C. (509) 879-1473 F. (509) 535-1384

USE CAUTION - EXTERNAL SENDER
Do not click on links or open attachments that are not familiar.
For questions or concerns, please e-mail phishing@avistacorp.com

Mead, Lorraine

From: Jack Schneider <JSchneider@nacarchitecture.com>
Sent: Thursday, April 19, 2018 11:40 AM
To: Mead, Lorraine
Cc: Walker, Matthew; bellison@spokanecity.org
Subject: RE: Pavilion RFP-03 COW Power

Hello Lorraine,

I reviewed the attached quote. Based on my experience with the Pig out in the Park service (Avista and Colvico) and the carraousel, I think the attached quote is accurate. Some of the cost is related to future capacity (for example we're running three 2" lines for Avista when we could have run one 1" line).

Thanks
Jack

Jack Schneider PE, LC, LEED AP
NAC Engineering

From: Mead, Lorraine <LorraineMead@hillintl.com>
Sent: Wednesday, April 18, 2018 10:43 AM
To: Jack Schneider <JSchneider@nacarchitecture.com>
Cc: Walker, Matthew <MatthewWalker@hillintl.com>; bellison@spokanecity.org
Subject: FW: Pavilion RFP-03 COW Power

Jack,

Can you review the pricing for this item?

Berry – I know you were asking about this – I'd like Jack to review before we give approval.

Thanks,
Lorraine

From: Josh Grigsby [mailto:joshg@garco.com]
Sent: Wednesday, April 18, 2018 10:26 AM
To: Mead, Lorraine
Cc: Sean LaRue
Subject: Pavilion RFP-03 COW Power

Lorraine,

Attached is our COP and backup for RFP-03. Please let us know if you have any questions.

Thanks,

JOSH GRIGSBY
GARCO CONSTRUCTION | Project Manager
o: (509) 535-4688 |
c: (509) 953-8456 | joshg@garco.com

Riverfront Park Pavilion

ITEM 2

RFP - Pavilion Stage - Change
Asphalt to 6" Reinforced Concrete

Garco Construction, Inc.

Phase	Description	Quan.	Unit	UNIT PRICES Labor	Material	Equip.	Garco Sub.	TOTALS Labor	Material	Equip.	Garco Sub.	TOTAL
	Credit For Asphalt Paving	24902	SF				(5.00)	-	-	-	(124,510)	(124,510)
	Add for Concrete Paving	24902	SF				7.07	-	-	-	176,057	176,057
				SUB-TOTALS				-	-	-	51,547	51,547
ADD-ONS:				OH&P: on Garco (as subcontractor) self-performed work.				15.00% (of Labor, Material & Equip.)				-
				OH&P: on Garco (as subcontractor) subcontracted work				4.00% (of Subcontract)				2,062
											SUB-TOTAL	53,609
				Insurance				1.00% (of Subtotal)				536
				Bond Premium				0.75% (of Subtotal)				402
											SUB-TOTAL	54,547
				B & O Tax				0.47% (of Subtotal)				252
				TOTAL - POTENTIAL CHANGE ORDER								**$ 54,799**

SPECIFIC EXCLUSIONS:

1. WSST,

CAMERON-REILLY CONCRETE

www.cameron-reilly.com

309 N Park Rd, Spokane Valley, WA 99212
509.466.5555 fax 509.468.3719
WA LIC#: CAMERRL942NU
ID LIC#: PWC-C-12153-AAA-4
OR LIC#: 202351

Quote

Date: 5/8/2018

Job Name: **US Pavilioin Site Concrete - 90% Plans**
Garco

Item #	Description	Unit	Quantity	Price Per	Total
	6" Concrete Paving	sf		$7.07	
	Excludes Dowels, Joint Sealing				

Hill International

6/7/18

PAV RFP#5 Upgrade Pavilion Floor from Asphalt to Concrete

Based on the subcontractor quote and other pricing – this pricing seems reasonable.

Lorraine Mead

ITEM 3

Mead, Lorraine

From: Jones, Garrett <gjones@spokanecity.org>
Sent: Monday, May 7, 2018 2:35 PM
To: Walker, Matthew; Ellison, Berry; Brown, Jo-Lynn; Mead, Lorraine; Rasmussen, Teri
Subject: RE: Acoustic Consulting Proposal- Pavilion-180426

Have we discussed this at all? When do we need to pull the trigger?

Thanks,

Garrett Jones, PLA|City of Spokane Parks & Recreation|Parks Planning and Development Manager tel 509.363.5462| gjones@spokanecity.org | spokaneparks.org

-----Original Message-----
From: Walker, Matthew [mailto:MatthewWalker@hillintl.com]
Sent: Friday, May 04, 2018 10:01 AM
To: Ellison, Berry; Brown, Jo-Lynn; Jones, Garrett; Mead, Lorraine; Rasmussen, Teri
Subject: Fwd: Acoustic Consulting Proposal- Pavilion-180426

FYI and discussion.

Sent from my iPhone

Begin forwarded message:

From: Keith Comes <kcomes@nacarchitecture.com<mailto:kcomes@nacarchitecture.com>>
Date: April 26, 2018 at 2:23:07 PM PDT
To: "Clancy Welsh (Clancy@garco.com<mailto:Clancy@garco.com>)" <Clancy@garco.com<mailto:Clancy@garco.com>>
Cc: "Walker, Matthew" <MatthewWalker@hillintl.com<mailto:MatthewWalker@hillintl.com>>
Subject: Acoustic Consulting Proposal- Pavilion-180426

Clancy,
Attached is the proposal for acoustic and AV consulting services as requested by the City. It is broken down into 2 phases. The proposed fee for the first phase (which would help define full scope of services) is $5800 plus $1000 travel expenses. We would like to include $1100 of NAC time/effort for coordination, attendance at the proposed meeting and processing. This results in a total proposed fee of $7900 . The fee for the second phase will be determined as needed based on the outcome of the first phase.

Please let us know as soon as possible if we are authorized to proceed with these additional services.

Keith Comes AIA, LEED AP

NAC Architecture

From: Yantis, Michael <Michael.Yantis@stantec.com<mailto:Michael.Yantis@stantec.com>>
Sent: Thursday, April 26, 2018 1:30 PM

To: Keith Comes <kcomes@nacarchitecture.com<mailto:kcomes@nacarchitecture.com>>
Cc: Erwin, Richard <Richard.Erwin@stantec.com<mailto:Richard.Erwin@stantec.com>>
Subject: Spokane Pavilion Proposal

Keith, thanks for thinking of Stantec with respect to acoustic and AV consulting on the Spokane Pavilion project. Please find attached a proposal of our services, as requested.

Please don't hesitate to contact me if you have any questions.

Kind regards,
Michael Yantis
Principal, Acoustics

Direct: (206) 224-3680
Mobile: (206) 919-9045
Fax: (206) 667-0554

Stantec Consulting Services Inc.
400 Fairview Avenue North Suite 620
Seattle WA 98109-5371 US

[Stantec]<http://www.stantec.com/>

[Facebook]<https://www.facebook.com/StantecInc?v=wall&ref=sgm>

[Twitter]<https://twitter.com/stantec>

[LinkedIn]<http://www.linkedin.com/company/stantec>

[YouTube]<http://www.youtube.com/user/StantecInc>

The content of this email is the confidential property of Stantec and should not be copied, modified, retransmitted, or used for any purpose except with Stantec's written authorization. If you are not the intended recipient, please delete all copies and notify us immediately.

Stantec Consulting Services Inc.
400 Fairview Ave. N. Suite 620, Seattle, Washington 98109

April 26, 2018

Mr. Keith Comes
NAC Architecture
1203 Riverside Avenue
Spokane, WA 99201-1107

Subject: *Professional Services Proposal and Agreement*
Spokane Pavilion

Dear Keith,

Thank you for calling Stantec for this project. Michael Yantis is committed as Principal-In-Charge and Richard Erwin as AV Project Manager. This letter confirms our understanding of the scope of work, presents our fee proposal for Professional Services, and will act as an Agreement and Notice to Proceed. The scope of work is based upon the information given to us in our conversations this week.

1. Project Scope. We believe the project to encompass: a renovation of the existing Pavilion.
2. Stantec proposes its services in two phases:
   a. Spokane meeting to consult with the team as follows:
      i. Strategies regarding AV systems for the project. Strategies could range from doing nothing, to providing infrastructure in specific locations or a City-owned system. Richard Erwin, our AV project manager, has a unique experience history that can assist the team in decisions regarding the scope and scheme of AV systems. In addition to his late-career as an AV consultant, he previously owned a touring AV equipment company that rented equipment and services to touring music groups. He also mixed sound for traveling tour groups such as the Eagles.
      ii. Coordination of initial acoustic designs associated with the Pavilion spaces.
      iii. Discuss strategies and clarify the process for limiting the sound levels from Pavilion events, received by neighboring property.
   b. A second phase consisting of the following:
      i. AV designs and specifications.
      ii. Measurements associated with limitation of Pavilion event sound received by neighboring property.
      iii. Clarification of acoustic recommendations. Coordination of recommendations with the design team. Review and comment on drawings and specifications related to the acoustic designs.

   We will clarify the scope of the second phase of the work and propose fees after the first phase.
3. Design Schedule*:* Our proposal is based on the following design schedule: It is expected that all of the work related to this proposal could be completed in the next two months. The initial phase can be completed within two weeks of authorization to proceed.
4. Professional Fees. Stantec will provide its professional services on a fixed fee as follows:
   a. Phase 1: Fixed fee of $5,800.
   b. Phase 2: To be determined

5. Design Meetings and Site Visits. This first phase of this proposal includes one meeting in Spokane that would include our acoustics and AV consultants (two people, total).
6. Additional Services. Additional Services or tasks may be provided at any time during the course of the project as needed to meet project requirements. Stantec will provide an Additional Service Request (ASR) describing the scope and compensation for added tasks and any schedule adjustment that may be required. Additional Services will be commenced only upon written approval the ASR which will act as a Notice to Proceed for the ASR.
7. Design Agreement. This document and attachments, including Attachment A: Terms and Conditions, represents the entire and integrated Agreement between NAC Architecture (Client) and Stantec (Consultant) for this Project.
8. Reimbursable Expenses. Expenses will be billed at cost plus 10% fee. Reimbursable expenses may include printing of client or owner review sets, delivery charges, out of town travel and other expenses as identified in the latest version of the standard AIA C141 Agreement. Based on our present understanding of the project, we estimate the cost of Reimbursable Expenses at $$1,000 for the first phase of the scope of work.

We look forward to working with you towards the successful completion of this project. Please call if I can answer any questions concerning our scope of work or proposal or provide any additional information.

Kind regards,

Michael Yantis, P.E.
Principal, Acoustics
Stantec Consulting Services Inc.(Consultant)

If this proposal and terms of agreement are acceptable, please indicate your acceptance and our authorization to proceed with this work by signing below and returning one executed original to me.

Client (Company Name) _____

Accepted by _____ Date _____

Name/Title _____

The Terms and Conditions are a part of this Proposal and Agreement.
Enclosures:
Attachment A: Terms and Conditions
Attachment B: Standard Hourly Billing Rates Schedule(s)
Attachment C: Not Used

The following Terms and Conditions are attached to and form part of a proposal for services to be performed by Consultant and together, when the CLIENT authorizes Consultant to proceed with the services, constitute the AGREEMENT. Consultant means the Stantec entity issuing the Proposal.

DESCRIPTION OF WORK: Consultant shall render the services described in the Proposal (hereinafter called the "SERVICES") to the CLIENT.

DESCRIPTION OF CLIENT: The CLIENT confirms and agrees that the CLIENT has authority to enter into this AGREEMENT on its own behalf and on behalf of all parties related to the CLIENT who may have an interest in the PROJECT.

TERMS AND CONDITIONS: No terms, conditions, understandings, or agreements purporting to modify or vary these Terms and Conditions shall be binding unless hereafter made in writing and signed by the CLIENT and Consultant. In the event of any conflict between the Proposal and these Terms and Conditions, these Terms and Conditions shall take precedence. This AGREEMENT supersedes all previous agreements, arrangements or understandings between the parties whether written or oral in connection with or incidental to the PROJECT

COMPENSATION: Payment is due to Consultant upon receipt of invoice. Failure to make any payment when due is a material breach of this AGREEMENT and will entitle Consultant, at its option, to suspend or terminate this AGREEMENT and the provision of the SERVICES. Interest will accrue on accounts overdue by 30 days at the lesser of 1.5 percent per month (18 percent per annum) or the maximum legal rate of interest. Unless otherwise noted, the fees in this agreement do not include any value added, sales, or other taxes that may be applied by Government on fees for services. Such taxes will be added to all invoices as required.

NOTICES: Each party shall designate a representative who is authorized to act on behalf of that party. All notices, consents, and approvals required to be given hereunder shall be in writing and shall be given to the representatives of each party.

TERMINATION: Either party may terminate the AGREEMENT without cause upon thirty (30) days notice in writing. If either party breaches the AGREEMENT and fails to remedy such breach within seven (7) days of notice to do so by the non-defaulting party, the non-defaulting party may immediately terminate the Agreement. Non-payment by the CLIENT of Consultant's invoices within 30 days of Consultant rendering same is agreed to constitute a material breach and, upon written notice as prescribed above, the duties, obligations and responsibilities of Consultant are terminated. On termination by either party, the CLIENT shall forthwith pay Consultant all fees and charges for the SERVICES provided to the effective date of termination.

ENVIRONMENTAL: Except as specifically described in this AGREEMENT, Consultant's field investigation, laboratory testing and engineering recommendations will not address or evaluate pollution of soil or pollution of groundwater.

PROFESSIONAL RESPONSIBILITY: In performing the SERVICES, Consultant will provide and exercise the standard of care, skill and diligence required by customarily accepted professional practices normally provided in the performance of the SERVICES at the time and the location in which the SERVICES were performed.

LIMITATION OF LIABILITY: The CLIENT releases Consultant from any liability and agrees to defend, indemnify and hold Consultant harmless from any and all claims, damages, losses, and/or expenses, direct and indirect, or consequential damages, including but not limited to attorney's fees and charges and court and arbitration costs, arising out of, or claimed to arise out of, the performance of the SERVICES, excepting liability arising from the sole negligence of Consultant. It is further agreed that the total amount of all claims the CLIENT may have against Consultant under this AGREEMENT, including but not limited to claims for negligence, negligent misrepresentation and/or breach of contract, shall be strictly limited to the lesser of professional fees paid to Consultant for the SERVICES or $50,000.00. No claim may be brought against

Consultant more than two (2) years after the cause of action arose. As the CLIENT's sole and exclusive remedy under this AGREEMENT any claim, demand or suit shall be directed and/or asserted only against Consultant and not against any of Consultant's employees, officers or directors.

Consultant's liability with respect to any claims arising out of this AGREEMENT shall be absolutely limited to direct damages arising out of the SERVICES and Consultant shall bear no liability whatsoever for any consequential loss, injury or damage incurred by the CLIENT, including but not limited to claims for loss of use, loss of profits and/or loss of markets.

INDEMNITY FOR MOLD CLAIMS: It is understood by the parties that existing or constructed buildings may contain mold substances that can present health hazards and result in bodily injury, property damage and/or necessary remedial measures. If, during performance of the SERVICES, Consultant knowingly encounters any such substances, Consultant shall notify the CLIENT and, without liability for consequential or any other damages, suspend performance of services until the CLIENT retains a qualified specialist to abate and/or remove the mold substances. The CLIENT agrees to release and waive all claims, including consequential damages, against Consultant, its subconsultants and their officers, directors and employees arising from or in any way connected with the existence of mold on or about the project site whether during or after completion of the SERVICES. The CLIENT further agrees to indemnify and hold Consultant harmless from and against all claims, costs, liabilities and damages, including reasonable attorneys' fees and costs, arising in any way from the existence of mold on the project site whether during or after completion of the SERVICES, except for those claims, liabilities, costs or damages caused by the sole gross negligence and/or knowing or willful misconduct of Consultant. Consultant and the CLIENT waive all rights against each other for mold damages to the extent that such damages sustained by either party are covered by insurance.

DOCUMENTS: All of the documents prepared by or on behalf of Consultant in connection with the PROJECT are instruments of service for the execution of the PROJECT. Consultant retains the property and copyright in these documents, whether the PROJECT is executed or not. These documents may not be used for any other purpose without the prior written consent of Consultant. In the event Consultant's documents are subsequently reused or modified in any material respect without the prior consent of Consultant, the CLIENT agrees to defend, hold harmless and indemnify Consultant from any claims advanced on account of said reuse or modification.

Any document produced by Consultant in relation to the Services is intended for the sole use of Client. The documents may not be relied upon by any other party without the express written consent of Consultant, which may be withheld at Consultant's discretion. Any such consent will provide no greater rights to the third party than those held by the Client under the contract, and will only be authorized pursuant to the conditions of Consultant's standard form reliance letter. Consultant cannot guarantee the authenticity, integrity or completeness of data files supplied in electronic format ("Electronic Files"). CLIENT shall release, indemnify and hold Consultant, its officers, employees, Consultant's and agents harmless from any claims or damages arising from the use of Electronic Files. Electronic files will not contain stamps or seals, remain the property of Consultant, are not to be used for any purpose other than that for which they were transmitted, and are not to be retransmitted to a third party without Consultant's written consent.

FIELD SERVICES: Consultant shall not be responsible for construction means, methods, techniques, sequences or procedures, or for safety precautions and programs in connection with work on the PROJECT, and shall not be responsible for any contractor's failure to carry out the work in accordance with the contract documents. Consultant shall not be responsible for the acts or omissions of any contractor, subcontractor, any of their agents or employees, or any

other persons performing any of the work in connection with the PROJECT. Consultant shall not be the prime contractor or similar under any occupational health and safety legislation.

GOVERNING LAW/COMPLIANCE WITH LAWS: The AGREEMENT shall be governed, construed and enforced in accordance with the laws of the jurisdiction in which the majority of the SERVICES are performed. Consultant shall observe and comply with all applicable laws, continue to provide equal employment opportunity to all qualified persons, and to recruit, hire, train, promote and compensate persons in all jobs without regard to race, color, religion, sex, age, disability or national origin or any other basis prohibited by applicable laws.

DISPUTE RESOLUTION: If requested in writing by either the CLIENT or Consultant, the CLIENT and Consultant shall attempt to resolve any dispute between them arising out of or in connection with this AGREEMENT by entering into structured non-binding negotiations with the assistance of a mediator on a without prejudice basis. The mediator shall be appointed by agreement of the parties. If a dispute cannot be settled within a period of thirty (30) calendar days with the mediator, if mutually agreed, the dispute shall be referred to arbitration pursuant to laws of the jurisdiction in which the majority of the SERVICES are performed or elsewhere by mutual agreement.

ASSIGNMENT: The CLIENT and Consultant shall not, without the prior written consent of the other party, assign the benefit or in any way transfer the obligations under these Terms and Conditions or any part hereof.

SEVERABILITY: If any term, condition or covenant of the AGREEMENT is held by a court of competent jurisdiction to be invalid, void, or unenforceable, the remaining provisions of the AGREEMENT shall be binding on the CLIENT and Consultant.

END ATTACHMENT A: TERMS AND CONDITIONS

ATTACHMENT B: STANDARD HOURLY BILLING RATES
Technology Consulting
2018- Standard Hourly Billing Rates*

TECHNOLOGY PRINCIPAL	240.00
TECHNOLOGY STAFF LEVEL 1	220.00
TECHNOLOGY STAFF LEVEL 2	210.00
TECHNOLOGY STAFF LEVEL 3	200.00
TECHNOLOGY STAFF LEVEL 4	185.00
TECHNOLOGY STAFF LEVEL 5	160.00
TECHNOLOGY STAFF LEVEL 6	150.00
TECHNOLOGY STAFF LEVEL 7	140.00
TECHNOLOGY STAFF LEVEL 8	125.00
CADD | BIM TECHNICIANS	105.00 - 125.00
PROJECT SUPPORT STAFF	90.00

*HOURLY BILLING RATES ARE SUBJECT TO CHANGE ANNUALLY ON JANUARY 1. THE HOURLY BILLING RATES LISTED ARE SPECIFIC ONLY TO THE STANTEC OFFICE AND PROPOSAL OR CONTRACT FOR WHICH THEY WERE ISSUED.

ATTACHMENT B: STANDARD HOURLY BILLING RATES
Acoustics Consulting
2018- Standard Hourly Billing Rates*

PRINCIPAL ACOUSTICAL DESIGN I	225.00
SR. ACOUSTICIAN I	190.00
SR. ACOUSTICIAN II	167.00
ACOUSTICIAN I	150.00
ACOUSTICIAN II	135.00
ACOUSTICIAN III	125.00
ACOUSTICIAN IV	115.00
CADD | BIM TECHNICIANS	105.00 - 125.00
PROJECT SUPPORT STAFF	90.00

*HOURLY BILLING RATES ARE SUBJECT TO CHANGE ANNUALLY ON JANUARY 1. THE HOURLY BILLING RATES LISTED ARE SPECIFIC ONLY TO THE STANTEC OFFICE AND PROPOSAL OR CONTRACT FOR WHICH THEY WERE ISSUED.

ITEM 4

RIVERFRONT PARK MODERIZATION

Request for Proposal (RFP)

Project Name:	PROMENADES	**RFP No**:	9
Project No.	SC6B0322000	**Date:**	5/1/18
Owner:	Spokane Parks & Recreation		
Contractor:	Garco Construction	**Architect/Eng:**	Berger/Jacobs

Please furnish your proposal for performing the changes outlined below and/or detailed on the attachments referred to below. The quotation should include an itemized breakdown of contractor and subcontractor costs, including labor, materials, rentals, approved services, and equipment. It should also include any schedule impact if applicable.

Description: Provide pricing to add back the original hardscape finishes in lieu of asphalt to SNX Mene that were Value Engineered out at the final drawing stage.

Howard Street Promenade

Canada Island Paving

Garco Construction, Inc.

Phase	Description	Quan.	Unit	UNIT PRICES Labor	Material	Equip.	Garco Sub.	TOTALS Labor	Material	Equip.	Garco Sub.	TOTAL
	Delete Asphalt Paving (700SY at $27/SY)	1.0	LS				(18,900)	-	-	-	(18,900)	(18,900)
	Add Concrete Paving (5265 SF)	1.0	LS				38,434	-	-	-	38,434	38,434
	Add Stone Pavers (282 SF)	1.0	LS				16,855	-	-	-	16,855	16,855
	Add Unit Pavers (1045 SF)	1.0	LS				15,180	-	-	-	15,180	15,180
				SUB-TOTALS				-	-	-	51,569	51,569
				ADD-ONS: OH&P: on Garco (as subcontractor) self-performed work.				12.00% (of Labor, Material & Equip.)				-
				OH&P: on Garco (as subcontractor) subcontracted work				4.00% (of Subcontract)				2,063
											SUB-TOTAL	53,632
				Insurance				1.00% (of Subtotal)				536
				Bond Premium				0.75% (of Subtotal)				402
											SUB-TOTAL	54,570
				B & O Tax				0.47% (of Subtotal)				252
				TOTAL - POTENTIAL CHANGE ORDER								**$ 54,822**

SPECIFIC EXCLUSIONS:

1. WSST

CAMERON-REILLY CONCRETE
www.cameron-reilly.com

309 N Park Rd, Spokane Valley, WA 99212
509.466.5555 fax 509.468.3719
WA LIC#: CAMERRL942NU
ID LIC#: PWC-C-12153-AAA-4
OR LIC#: 202351

QUOTE

Date: 5/7/2018

Job Name: **Riverfront Howard Street Promenade**
Garco

Item #	Description	Unit	Quantity	Price Per	Total
	.				
	2) - Canada Island				
	Primary Paving - 6" Reinforced w/V-Groove Pattern	sf	5265	$7.30	$38,434.50
	(subtotal = $38,434.50)				

SEGMENTAL SYSTEMS INC
HARDSCAPE SPECIALISTS

- Retaining Walls
- Brick Pavers
- Concrete Pavers
- Hydropressed Slabs
- Natural Stone
- Snow Removal

4-28-2018

Garco Const.
Riverfront Park Howard St Bridge North to Arena
Bid for sections 321400 Unit Paving and 321440 Stone Paving

321400 Unit Paving
Supply and install metal paver edging, 6” compacted gravel base, 1” sand bedding, Abbotsford Standard Classic pavers (special order) cut pavers and sand joints

321440 Stone paving
Supply and install 6” compacted gravel base, 1” sand bedding, 3” thick “Tertiary” paving stones, polymeric joint sand, 6” thick and 12” thick stones as required

2) Canada Island
$15,180.00 for unit paving
$16,855.65 for Stone paving

Bid by Dan Hughes
Dan Hughes, President

P.O. Box 755 ● Otis Orchards, Washington 99027-0755 ● Phone/Fax (509)924-7973 N. Idaho (208)660-9953
Segmental@msn.com | www.SegmentalSystems.com

Hill International

6/7/18

PROM RFP#9 Add Original Finishes back to snx^{w} mene.

Based on the subcontractor quotes and a brief review by the Looff PM – this pricing seems reasonable.

Lorraine Mead

ITEM 5

Fulcrum Environmental Consulting, Inc.
207 West Boone Avenue
Spokane, WA 99201
509.459.9220 phone
509.459.9219 fax

FULCRUM environmental consulting

May 16, 2018
Invoice No: 00182433.00 - 39926

Heidi Helberg
Garco Construction
4114 E. Broadway
Spokane, WA 99206

Project 00182433.00 Garco Riverfront Park ACM Bridge Sampling

Professional Services from May 2, 2018 to May 11, 2018

Personnel

	Hours	Rate	Amount	
Green, Rebecka	1.50	60.00	90.00	
Konzek, Brett	3.50	75.00	262.50	
Trent, Travis	.75	160.00	120.00	
Totals	5.75		472.50	
Total Labor				**472.50**

Unit Billing

Small Tools/Disposable Equipment ($10)				
0.5 hours @ $10/hour, 5-2-18			5.00	
Total Units			**5.00**	**5.00**
		Total this Invoice		**$477.50**

Outstanding invoices are subject to interest of 12% per annum beginning 30 days after the date of invoice.

RECEIVED VIA EMAIL
MAY 16 2018
GARCO CONSTRUCTION

JOB #_____
PHASE #_____
CAT. #_____
OK'D BY_____
COMMENTS_____

Project	00182433.00	Garco Riverfront Park ACM Bridge Sampl'g	Invoice	39926

Billing Backup

Wednesday, May 16, 2018
10:24:28 AM

Fulcrum Environmental Consulting, Inc. Invoice 39926 Dated 5/16/2018

Project 00182433.00 Garco Riverfront Park ACM Bridge Sampling

Personnel

			Hours	Rate	Amount	
0068	1 - Green, Rebecka	5/2/2018	.50	60.00	30.00	
0104	6 - Konzek, Brett	5/2/2018	.50	75.00	37.50	
0104	6 - Konzek, Brett	5/2/2018	.50	75.00	37.50	
0104	6 - Konzek, Brett	5/3/2018	.25	75.00	18.75	
0104	6 - Konzek, Brett	5/4/2018	.50	75.00	37.50	
0010	18 - Trent, Travis	5/7/2018	.25	160.00	40.00	
0104	6 - Konzek, Brett	5/8/2018	1.00	75.00	75.00	
0068	1 - Green, Rebecka	5/9/2018	.25	60.00	15.00	
0068	1 - Green, Rebecka	5/9/2018	.25	60.00	15.00	
0104	6 - Konzek, Brett	5/9/2018	.75	75.00	56.25	
0010	18 - Trent, Travis	5/9/2018	.50	160.00	80.00	
0068	1 - Green, Rebecka	5/11/2018	.25	60.00	15.00	
0068	1 - Green, Rebecka	5/11/2018	.25	60.00	15.00	
	Totals		5.75		472.50	
	Total Labor					**472.50**

Unit Billing

Small Tools/Disposable Equipment ($10)

0.5 hours @ $10/hour, 5-2-18	5.00	
Total Units	**5.00**	**5.00**
Total this Project		**$477.50**
Total this Report		**$477.50**

Return to Page 2

CITY OF SPOKANE
PARKS AND RECREATION DEPARTMENT
CHANGE ORDER NO. 11

NAME OF CONTRACTOR: Walker Construction

PROJECT TITLE: Looff Carrousel

CITY CLERK CONTRACT NUMBER: OPR 2017-0143

==========

DESCRIPTION OF CHANGE: AMOUNT: $102,518.00

Summary of changes on attached list

==========

TOTAL AMOUNT: $ 102,518.00

CONTRACT SUM (EXCLUDE SALES TAX)	
ORIGINAL CONTRACT SUM (INCLUDE ALTERNATES)	$7,064,600
NET AMOUNT OF PREVIOUS CHANGE ORDERS	$2,140,364.92
CURRENT CONTRACT AMOUNT	$9,204,964.92
CURRENT CHANGE ORDER (EXCLUDES SALES TAX)	$ 102,518.00
REVISED CONTRACT SUM	$ 9,307,482.92

CONTRACT COMPLETION DATE	
ORIGINAL CONTRACT COMPLETION DATE	**12/19/17**
CURRENT COMPLETION DATE	**12/26/17**
REVISED COMPLETION DATE	**5/11/18**

Contractor: _____ Date: _____

City Approval: _____ Date: _____

City Clerk Attest: _____ Date: _____

Pre-Approved as to form: Pat Dalton, Assistant City Attorney

	Looff Carrousel	
	Change Order #11	
PCO #	Description	Amount
CCD 18	Install and remove plywood on the bridge	$27,098.00
CCD 34	Increase carrousel motor feeders to 30HP	$1,711.00
CCD 35	Flaggers for southbound construction traffic on Post St.	$38,468.00
CCD 37	Carrousel deck slope	$9,701.00
CCD 39	Controls modifications for carrousel operation; add receptacles	$6,126.00
CCD 40	Add music player fro carrousel	$725.00
CCD 41	Final light connections at carrousel	$5,326.00
CCD 42	Add power receptacle and data conduit in fountain vault	$1,272.00
CCD 43	Add dimming control for interior lights	$2,081.00
CCD 45	Provide cellular call-out cards for fire alarm and intrusion	$2,938.00
CCD 49	Rock removal and asphalt patch at SFB light poles	$7,072.00
	Change Order #11	**$102,518.00**

NAC
ARCHITECTURE

Construction Change Directive

To WALKER CONSTRUCTION

CCD No. 018
Project LOOFF CARROUSEL FACILITY
Date October 20, 2017
NAC No. 111 - 16004 - 10Fb
Owner Project No. 4312-16

in connection with your contract with City of Spokane dated January 27, 2017

In order to expedite the Work and avoid or minimize delays in the Work which may affect Contract Sum or Contract Time, you are hereby directed to make the following change(s). Submit final costs for Work involved and change in Contract Time (if any) for inclusion in a subsequent Change Order.

Title of CCD Bridge Protection

Description ☐ Continued on page 2 (Use Alt + Enter to create new lines.)

Provide double layer of plywood full length of bridge x 24'-0" wide to protect bridge structure.

Attachments None

The proposed basis of adjustment to the Contract Sum is: (lump sum, unit price, per Subparagraph 7.3.3 of AIA Document A201, or other)

Change Addition **in Contract Sum of** TBD ☐ **Fixed** ☐ **Maximum**

Change not applicable **in Contract Time of** 0 **calendar days** ☐ **Fixed** ☐ **Maximum**

The amount covers all direct and indirect costs related to the change including effects of the change on the remainder of the project. All other provisions of the contract remain in full effect. Attached are Cost Proposal Breakdown Sheets.

Signature by the Contractor indicates the Contractor's agreement with the proposed adjustments in the Contract Sum and Contract Time set forth in the Construction Change Directive. When signed by the Owner and Architect and received by the Contractor, this document becomes effective IMMEDIATELY as a Construction Change Directive (CCD), and the Contractor shall proceed with the change(s) described above.

Contractor's Acceptance		**Date**
Architect's Recommendation		**Date**
Owner's Acceptance		**Date**

As indicated above the Owner accepts the foregoing proposal and authorizes performance of the changes specified. If the Contract Sum or Contract Time are marked as "Maximum," firm amounts will be required from the Contractor, with backup documentation prior to issuance of CO.

Final Cost Based on back-up Documentation:

Final cost of change 27,098

Final time change _____ **calendar days**

Contractor's Acceptance		**Date** 12.27.17
Architect's Recommendation		**Date**
Owner's Acceptance		**Date**

A Change Order (CO) will follow which includes the Authorization amount. Billing cannot be honored for the CCD until issuance of the CO.
Distribution: After all signatures, (1) original to Owner, (1) copy to Architect, (1) copy to Contractor.

CCD-018.xlsm

>1203 West Riverside Avenue, Spokane, WA 99201-1107
509 838 8240 / nacarchitecture.com
Seattle / Spokane / Los Angeles

WALKER CONSTRUCTION

Looff Carrousel

Description: Plywood bridge protection

CO req #

Dated

SECTION	DESCRIPTION	UNIT	QUANTITY	U/P LABOR	U/P MATERIAL	U/P SUB	TOTAL LABOR	TOTAL MATERIALS	Revised Submitted TOTAL SUBS	12/20/2017 TOTAL
							0.00	0.00	0.00	0.00
	Plywood	ls	1	0	10984	0	0.00	10,984.00	0.00	10,984.00
	plastic/screws	ls	1	0	685	0	0.00	685.00	0.00	685.00
							0.00	0.00	0.00	0.00
	Segmental - labor to install	ls	1	0	-	4372	0.00	0.00	4,372.00	4,372.00
							0.00	0.00	0.00	0.00
	Walker labor to install	hr	24	32	0	0	768.00	0.00	0.00	768.00
	forklift	hr	6	0	50	0	0.00	300.00	0.00	300.00
	Demo estimate						0.00	0.00	0.00	0.00
	Walker labor	hr	60	35	0	0	2,100.00	0.00	0.00	2,100.00
	Disposal	ls	1	0	2300	0	0.00	2,300.00	0.00	2,300.00
							0.00	0.00	0.00	0.00
						SUBTOTAL	2,868.00	14,269.00	4,372.00	21,509.00
						BUR/RATE	0.52	0.02	0.02	
						BURDEN	1,491.36	285.38	87.44	1,864.18
							4,359.36	14,554.38	4,459.44	23,373.18
								SUP/MED	0	0.00
										23,373.18
								SUB OH&P	8%	356.76
										0.00
								WALKER OH&P	15%	2,837.06
										0.00
								ADJUST		0.00
										26,567.00
								BOND	0.02	531.34
								TOTAL	ADD	$ 27,098

Accepted by Contractor:	Recommended By:	Approved by Owner:
Walker Construction, Inc.	NAC	
By:	By:	By:
Date:	Date:	Date:

SEGMENTAL SYSTEMS, INC.
P.O. Box 755
Otis Orchards, WA 99027-0755

Voice: 509-924-7973
Fax: 509-924-7973

INVOICE

Invoice Number: 17039
Invoice Date: Dec 11, 2017
Page: 1
Duplicate

Bill To:

WALKER CONSTRUCTION
PO BOX 3901
SPOKANE, WA 99220

Ship to:

WALKER CONSTRUCTION
PO BOX 3901
SPOKANE, WA 99220

Customer ID	Customer PO	Payment Terms	
1015		Net 30 Days	
Sales Rep ID	**Shipping Method**	**Ship Date**	**Due Date**
			1/10/18

Quantity	Item	Description	Unit Price	Amount
		Installation of pavers on the bridge at the Looff Carrousel.		17,500.00
		Add polymeric sand to bridge.		8,000.00
		Metal for both ends of the bridge.		2,186.00
		66 man hours to Plywood bridge at Looff/Riverfront park.		4,372.50

Check/Credit Memo No:

Subtotal	32,058.50
Sales Tax	
Total Invoice Amount	32,058.50
Payment/Credit Applied	
TOTAL	**32,058.50**

Page: 1 of 1

MATHEUS LUMBER COMPANY, INC.

INVOICE

8692 N. HAUSER LAKE RD.
HAUSER, ID 83854
Ph : 208-457-9829 877-947-9663
Fax : 208-457-9820
www.matheuslumber.com

Remit To:
Matheus Lumber Company, Inc.
PO BOX 2260
WOODINVILLE, WA 98072

INVOICE NO.	INVOICE DATE	DUE DATE
65039-22	10/24/2017	11/10/2017

TERMS
NET 10TH PROX, 25TH CUTOFF

SOLD TO: WALKER01/601
WALKER CONSTRUCTION INC
PO BOX 3901
SPOKANE, WA 99220

Ph: 509-535-3354 Fax: 509-534-1440

SHIP TO: 0076
RIVERFRONT CAROUSEL
610 W SPOKANE FALLS BLV
SPOKANE, WA 99201

Ship Date	Routing	Salesperson	FOB	Customer P.O. No.
10/19/2017	OUR TRUCK	D. BELLES	DELIVERED	

QTY	UOM	ITEM#	DESCRIPTION	FOOTAGE	UNIT PRICE	AMOUNT
160	PC	70040870946000 (601)	1-1/8" 4X8 U/L T&G	5,120 SF	1,239.00/MSF	6,343.68
160	PC	70040845460000 (601)	5/8" 4X8 CDX	5,120 SF	740.00/MSF	3,788.80
				WAID	0.0000 %	0.00

WALKER CONSTRUCTION INC.
OCT 25 2017
Job # 1701
Ca M
PM

A Service Charge of 1.5% per Month will be applied to Past Due Balances.

FSC: SCS-COC-004633

FOOTAGE	SUB TOTAL	TAX	TOTAL AMOUNT
10,240 SF	10,132.48	0.00	10,132.48

Important Terms

This invoice is subject to the Terms and Conditions of Sale attached to your Credit Application and/or set forth on the Matheus Company,Inc. website at www.matheuslumber.com, which terms and conditions are incorporated by reference herein. In the event of any conflict between any terms and conditions stated on this invoice and the Terms and Conditions of Sale, the Terms and Conditions of Sale shall control.

MATHEUS LUMBER COMPANY,INC. MAKES NO EXPRESS WARRANTIES, REPRESENTATIONS, OR ENDORSEMENTS AND DISCLAIMS ALL WARRANTIES, EXPRESSED OR IMPLIED, INCLUDING WITHOUT LIMITATION ANY WARRANTY OF MERCHANTABILITY OR OF FITNESS FOR ANY PARTICULAR PURPOSE.

ORIGINAL

Remit To:

STAR RENTALS INC
PO BOX 3875
SEATTLE WA 98124-3875
www.starrentals.com

Invoice

Closed	Invoice#
Thu 10/19/2017	262265-13

Bill to: **Customer #: 152928**

WALKER CONSTRUCTION
WALKER CONSTRUCTION
P.O. BOX 3901
SPOKANE WA 99220 3901

Job Descr: CAROUSEL JOB
PO #: 1701
Job No: 1701
Date Out Thu 10/19/2017

Terms	Aging Date
Net 10th	Thu 10/19/2017

Fold Here Fold Here

Ordered By: MARK/DAN

Qty	Key	Items Sold	Each	Price
5	4993-0035-13	.620B 6MIL, 20' X 100' BLACK	$85.00	$425.00
1000	4999-0010-13	1/4" X 2" SDS WOOD SCREWS SIMP TREATED - 250 PER PK-SIMPSON	$0.26	$260.00

WALKER CONSTRUCTION INC.

OCT 20 2017

Job # 1761
Cat. M
PM

Please pay from this invoice.

Rental and Sales:				SPOKANE VALLEY:
$685.00				$0.00

Current Net 10th

Total Amount: $685.00		Total Paid $0.00	Total Due $685.00
509-924-8080 Phone			

Open Monday through Friday 7:00 am to 5:00 PM, Closed Saturday + Sunday
Printed On Fri 10/20/2017 7:44:49AM

Software by Point-of-Rental Software www.point-of-rental.com

Modification #1
Contract-Params.SQL.rpt (10)

NAC
ARCHITECTURE

Construction Change Directive

To WALKER CONSTRUCTION

CCD No. 034
Project LOOFF CARROUSEL FACILITY
Date February 14, 2018
NAC No. 111 - 16004 - 10Fb
Owner Project No. 4312-16

In connection with your contract with City of Spokane dated January 27, 2017

In order to expedite the Work and avoid or minimize delays in the Work which may affect Contract Sum or Contract Time, you are hereby directed to make the following change(s). Submit final costs for Work involved and change in Contract Time (if any) for inclusion in a subsequent Change Order.

Title of CCD Carrousel Motor Feeders

Description ☐ Continued on page 2 (Use Alt + Enter to create new lines.)

See response to RFI-0155-01

Attachments

The proposed basis of adjustment to the Contract Sum is: (lump sum, unit price, per Subparagraph 7.3.3 of AIA Document A201, or other)

Change Addition **in Contract Sum of** TBD ☐ Fixed ☐ Maximum

Change not applicable **in Contract Time of** 0 **calendar days** ☐ Fixed ☐ Maximum

The amount covers all direct and indirect costs related to the change including effects of the change on the remainder of the project. All other provisions of the contract remain in full effect. Attached are Cost Proposal Breakdown Sheets.

Signature by the Contractor indicates the Contractor's agreement with the proposed adjustments in the Contract Sum and Contract Time set forth in the Construction Change Directive. When signed by the Owner and Architect and received by the Contractor, this document becomes effective IMMEDIATELY as a Construction Change Directive (CCD), and the Contractor shall proceed with the change(s) described above.

Contractor's Acceptance _____ **Date** 5/15/18
Architect's Recommendation _____ **Date** _____
Owner's Acceptance _____ **Date** _____

As indicated above the Owner accepts the foregoing proposal and authorizes performance of the changes specified. If the Contract Sum or Contract Time are marked as "Maximum," firm amounts will be required from the Contractor, with backup documentation prior to issuance of CO.

Final Cost Based on back-up Documentation:

Final cost of change 1711
Final time change _____ **calendar days**

Contractor's Acceptance _____ **Date** _____
Architect's Recommendation _____ **Date** _____
Owner's Acceptance _____ **Date** _____

A Change Order (CO) will follow which includes the Authorization amount. Billing cannot be honored for the CCD until issuance of the CO.
Distribution: After all signatures, (1) original to Owner, (1) copy to Architect, (1) copy to Contractor.

CCD-034.xlsm

>1203 West Riverside Avenue, Spokane, WA 99201-1107
509 838 8240 / nacarchitecture.com
Seattle / Spokane / Los Angeles

Construction Change Directive

CCD No. 034

Additional Description (Use Alt + Enter to create new lines.)

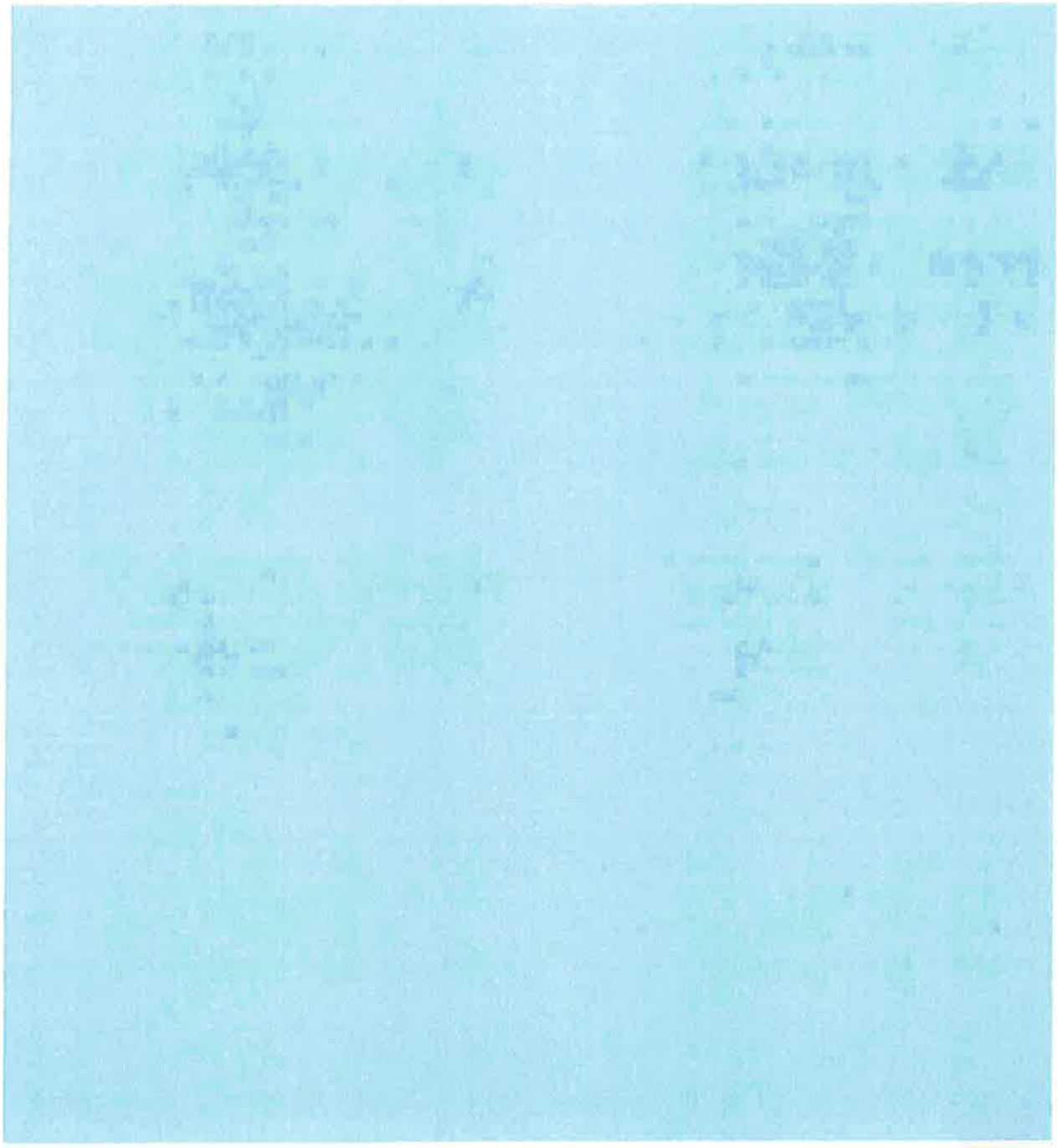

>1203 West Riverside Avenue, Spokane, WA 99201-1107
509 838 8240 / nacarchitecture.com
Seattle / Spokane / Los Angeles

NEWFORMA
Project Cloud

Looff Carrousel Facility

TYPE:	INFO - INFORMATION REQUEST
OFFICIAL NUMBER:	INFO-RFI-0155-01
SUBCONTRACTOR NUMBER:	
TITLE:	Connecting new carousel motor to power
DUE DATE:	02/06/2018
DATE SUBMITTED	01/30/2018
DATE RETURNED	02/06/2018
CONSULTANT DUE DATE	N/A
QUESTION:	The motor originally sized for the carousel was 20hp. The motor supplier calculated the need for a 30hp motor to match the torque of the old motor. Panel C can not provide the 150amps for a 30hp motor.
SUGGESTION:	
SUB/MANUFACTURER:	N/A
TRADE/DISCIPLINE:	N/A
CATEGORY:	N/A
COST IMPACT	Proceed - Cost Impact

Attachments

02/06/2018	CE-51.pdf	Architect/Engineer - Jack Schneider
02/06/2018	CE-50.pdf	Architect/Engineer - Jack Schneider
02/06/2018	CE-49.pdf	Architect/Engineer - Jack Schneider
02/06/2018	Looff_Carrousel_-_Submittals_-_ControlFreek_jks.pdf	Architect/Engineer - Jack Schneider
02/06/2018	20180123_150126.jpg	Architect/Engineer - Jack Schneider
02/06/2018	CE-53.pdf	Architect/Engineer - Jack Schneider
02/06/2018	CE-52.pdf	Architect/Engineer - Jack Schneider

History

02/06/2018 08:39 AM	(unknown)	Project Admin (Contractor) - Jacky Wakefield
02/06/2018 07:19 AM	Answered	Architect/Engineer - Jack Schneider
02/06/2018 07:19 AM	(unknown)	Project Admin (Contractor) - Jacky Wakefield
01/30/2018 12:56 PM	Forwarded	Project Admin (Contractor) - Jacky Wakefield
01/30/2018 12:56 PM	Added	Project Admin (Contractor) - Jacky Wakefield

Answer History

(none) *Project Admin (Contractor) - Jacky Wakefield*

02/06/2018 *Architect/Engineer - Jack Schneider*

Please review attached clarification sketches. The design has been updated to reflect a connection from MSB to the carrousel VFD. If materials and labor related to installation/connection of 20 HP motor can be returned, please include a credit. Otherwise, turn over to owner.

Also, please reference the Control Freek submittal for equipment and connections. Note that references to 20 HP motor should be changed to 30 HP motor. I have attached the original reviewed submittal for reference.

References

(none)

Revisions

Statistics

DAYS IN REVIEW: 7

DAYS REQUESTED FOR REVIEW: 7

- ARCHITECTURAL EQUIPMENT SCHEDULE -

ID	DESCRIPTION	LEVEL	ROOM NO.	VOLTS	PH	FLA	HP	PANEL	CCT NO.	DISC	FUSE	CB	PH COUNT	PHASE	NEUT.	GND	RACEWAY	STARTER TYPE	STARTER SIZE	REMARKS
A-01	ORIGINAL AC MOTOR	LEVEL 1	117	208 V	3	0 A	15	C	10,12,14	100/3	60	80	3	3	3	8	1-1/4"	FVNR	2	MOTOR REINSTALLED AS ORIGINALLY DESIGNED BUT REQUIRES ADDITIONAL MODIFICATION TO PLACE IN USE (COMON GEAR) COORDINATE MOTOR RECONNECTION WITH GE. CONTACT CAL BRAUN AT 604-421-8650, CAL.BRAUN@GE.COM. THE MOTOR IS LISTED AT 220 VOLT BUT IS OPERATION AT 208 VOLT.
A-02	NEW AC MOTOR	LEVEL 1	117	208 V	3	85 A	30	MSB	10	VFD	N/A	150	3	3/0 AL	3/0 AL	6	2-1/2"	VFD (PLC)	N/A	PROGRAMMABLE LOGIC CONTROL, SEE ONE-LINE. CONTACT ADAM SNYDER WITH CONTROL FREEK (PLC PROVIDER) AT 509-290-6500 TO VERIFY IF NEUTRAL CONDUCTOR IS NEEDED OR ADDITIONAL PHASE CONDUCTORS FOR PLC CABINET.
ADA-01	OVERHEAD DOOR	LEVEL 1	101	120 V	1	10 A	0.5	A	21	20/1	N/A	20	1	12	12	12	3/4"	FVNR	00	
MD-01	MOTORIZED DOOR GIFT SHOP	LEVEL 1		208 V	1	10 A	-	A	36,38	30/2	0	30	2	10	10	10	3/4"	FVNR	00	

- CONCESSIONS EQUIPMENT SCHEDULE -

ID	DESCRIPTION	LEVEL	ROOM #	ROOM NAME	PANEL	CIRCUIT #	ELECT DATA	CONNECTION TYPE	CB SIZE	DISC SIZE	PHASE SIZE	NEUTRAL SIZE	GROUND SIZE	REMARKS
C1	ICE MACHINE	LEVEL 1	114	CATERING	B	15	120 V/1-0 VA	REC	20	20/1	12	12	12	
C2	POPCORN MACHINE	LEVEL 1	114	CATERING	B	52	120 V/1-0 VA	REC	20	20/1	12	12	12	
C3	HOLDING CABINET	LEVEL 1	114	CATERING	B	49	120 V/1-0 VA	REC	20	20/1	12	12	12	
C3	HOLDING CABINET	LEVEL 1	114	CATERING	B	53	120 V/1-0 VA	REC	20	20/1	12	12	12	
C4	ESPRESSO MACHINE	LEVEL 1	115	CONCESSIONS	A	28,30	208 V/2-0 VA	REC	30	30/2	10	10	10	
C5	SODA MACHINE	LEVEL 1	115	CONCESSIONS	A	2	120 V/1-0 VA	REC	20	20/2	12	12	12	
C6	POPCORN MACHINE	LEVEL 1	115	CONCESSIONS	A	1	120 V/1-0 VA	REC	20	20/1	12	12	12	
C9	ICE CREAM FREEZER	LEVEL 1	115	CONCESSIONS	A	37,39	208 V/2-0 VA	REC	30	30/2	10	10	10	

CITY OF SPOKANE PARKS & RECREATION DEPARTMENT

LOOFF CARROUSEL FACILITY

608 W. SPOKANE FALLS BLVD, SPOKANE, WA 99201

NAC ENGINEERING
nacarchitecture.com
1203 WEST RIVERSIDE AVE
SPOKANE WA 99201
P.509.838.8240

NAC NO	111-16004
RE:	E0.03
DRAWN	KVT
CHECKED	JKS
DATE:	02/06/18
ADDENDUM	-

CE-49

EQUIPMENT SCHEDULES

D:_Revit\LOOF-ELEC_klochinskiy.rvt

WALKER CONSTRUCTION

Looff Carrousel

Description:

CO req #

Dated

SECTION	DESCRIPTION	UNIT	QUANTITY	U/P LABOR	U/P MATERIAL	U/P SUB	TOTAL LABOR	TOTAL MATERIALS	TOTAL SUBS	Revised Submitted 5/15/2018 TOTAL
							0.00	0.00	0.00	0.00
							0.00	0.00	0.00	0.00
	Peterson	ls	1	0	0	1711	0.00	0.00	1,711.00	1,711.00
							0.00	0.00	0.00	0.00
							0.00	0.00	0.00	0.00
							0.00	0.00	0.00	0.00
							0.00	0.00	0.00	0.00
							0.00	0.00	0.00	0.00
							0.00	0.00	0.00	0.00
							0.00	0.00	0.00	0.00
							0.00	0.00	0.00	0.00
						SUBTOTAL	0.00	0.00	1,711.00	1,711.00
						BUR/RATE	0.52	0.02	0.02	
						BURDEN	0.00	0.00	34.22	34.22
							0.00	0.00	1,745.22	1,745.22
								SUP/MED	0	0.00
										1,745.22
								SUB OH&P	8%	139.62
										0.00
								WALKER OH&P	15%	0.00
										0.00
								ADJUST		0.00
										1,884.84
								BOND	0.02	37.70
								TOTAL	ADD	$ 1,923

PETERSON Electric Inc.

Peterson Electric – Change Order Break Down

Project Name: Riverfront Park Looff Carrousel Facility

COP No. CCD-034

Project No.

Source Documents: CCD-034

Date: 2/28/2018

Contractor: Peterson Electric, Inc.

Contractor Ref. No. CCD-034

Description: Feed new carousel motor from panel MSB instead of panel C

1. CRAFT LABOR COSTS		Itemize all costs on attached COP Cost Breakdown form.	
Direct Labor Costs:			
a. crew (apprentices, journeymen, & laborers)			
b. foreman		$785.17	
c. lead foreman		$-	
DIRECT LABOR SUBTOTAL		$785.17	
Supervision:			
d. direct supervison (NTE 15% of 1a)		$-	
e. safety (NTE 2% of lines 1a, b, & c)		$15.70	
			1. CRAFT LABOR COSTS $801.00
2. MATERIAL COSTS			
a. material costs		$616.10	
b. freight costs (itemize)		$-	
			2. MATERIAL COSTS $616.00
3. EQUIPMENT COSTS			
a. owned equipment (per spec approved source)		$-	
b. rental equipment (per invoices attached)		$-	
			3. EQUIPMENT COSTS $-
4. SMALL TOOLS			
a. small tools (NTE 5% of 1a & b)		$39.26	
			4. SMALL TOOLS $39.00
			SUBTOTAL 1 thru 4 $1,456.00
5. OVERHEAD & PROFIT			
a. NTE 15% portion of 1, 2, 3, & 4		$218.40	
			5. OVERHEAD & PROFIT $218.00
6. SUB-SUBCONTRACTORS			
a.			
b.		$-	
c.		$-	
d.		$-	
			6. SUB-SUBCONTRACTORS $-
7. OVERHEAD & PROFIT ON SUB-SUBCONTRACTORS			
a. NTE 8% of Line 6 up to $50,000 for each sub		$-	
b. NTE 6% of Line 6 in excess of $50,000 for each sub		$-	
			7. OVERHEAD & PROFIT ON SUB-SUBCONTRACTORS $-
8. INSURANCE			
a. payroll driven liability insurance	1.50 % of 1	$12.02	
b. volume driven liability insurance	1.50 % of 1-7	$25.11	8. INSURANCE $37.00
9. BOND			
a. bond	0.00 % of 1-8	$-	9. BOND $-
			TOTAL COST $1,711.00

COP Cost Breakdown

Project Name: Riverfront Park Looff Carrousel Facility
Project No.
Contractor: Peterson Electric, Inc.

COP No. CCD-034
Date: 2/28/2018
Contractor Ref. No. CCD-034

	Description	Quantity	Unit Type	Labor		Material		Equipment		Total Cost
				Unit $	Cost	Unit $	Cost	Unit $	Cost	
	Foreman Labor	12.84		$61.15	$785.17		$-		$-	$785.17
					$-		$-		$-	$-
					$-		$-		$-	$-
	Material (See Take Off)	1			$-	$616.10	$616.10		$-	$616.10
					$-		$-		$-	$-
					$-		$-		$-	$-
					$-		$-		$-	$-
					$-		$-		$-	$-
					$-		$-		$-	$-
					$-		$-		$-	$-
					$-		$-		$-	$-
					$-		$-		$-	$-
					$-		$-		$-	$-
					$-		$-		$-	$-
					$-		$-		$-	$-
					$-		$-		$-	$-
					$-		$-		$-	$-
					$-		$-		$-	$-
					$-		$-		$-	$-
					$-		$-		$-	$-
					$-		$-		$-	$-
					$-		$-		$-	$-
					$-		$-		$-	$-
					$-		$-		$-	$-
					$-		$-		$-	$-
					$-		$-		$-	$-
					$-		$-		$-	$-
	Labor Subtotal				**$785.17**					
	Foreman				$-		$-		$-	$-
	Lead Foreman				$-		$-		$-	$-
					$-		$-		$-	$-
Total Cost of Work		Form Revised 6/1/2004			**$785.17**		**$616.10**		**$-**	**$1,401.27**

COP Wage Rates

Project Name: Riverfront Park Looff Carrousel Facility

Project No: _____

Contractor: Peterson Electric, Inc.

Trade & Position		JOURNEYMAN	FOREMAN	GF	60.00%	65.00%	70.00%	75.00%	80.00%	85.00%	90.00%
Rate Schedule Date*											
Prevailing Wage (incl. Benefits)											
1. Hourly Wage Rate		$31.50	$34.64	$37.80	$19.90	$20.48	$22.05	$23.63	$25.20	$26.78	$28.35
2. Hourly Benefits		$17.92	$18.02	$18.13	$9.30	$9.35	$15.18	$15.59	$16.00	$16.39	$16.80
SUBTOTAL		**$49.42**	**$52.66**	**$55.93**	**$29.20**	**$29.83**	**$37.23**	**$39.22**	**$41.20**	**$43.17**	**$45.15**
	Rate										
3. FUI % of 1	0.80%	$0.25	$0.28	$0.30	$0.16	$0.16	$0.18	$0.19	$0.20	$0.21	$0.23
4. FICA % of 1	6.20%	$1.95	$2.15	$2.34	$1.23	$1.27	$1.37	$1.47	$1.56	$1.66	$1.76
5. MEDICARE % of 1	1.45%	$0.46	$0.50	$0.55	$0.29	$0.30	$0.32	$0.34	$0.37	$0.39	$0.41
6. SUI % of 1 (insert correct % to right)	3.41%	$1.07	$1.18	$1.29	$0.68	$0.70	$0.75	$0.81	$0.86	$0.91	$0.97
7. WC (insert $ amount per hour)		$2.09	$2.19	$2.26	$0.67	$1.83	$1.87	$1.92	$1.95	$1.98	$2.03
TOTAL (incl. payroll taxes)		**$55.25**	**$58.96**	**$62.67**	**$32.23**	**$34.09**	**$41.72**	**$43.94**	**$46.14**	**$48.33**	**$50.54**

NOTES: * Rate schedule date is the date of the Dept. of Labor & Industries Prevailing Wage Rate used or the Union Agreement.

a. for items 3 thru 5, the Federal rates do not vary by firm, and the percentages are already locked into this form.

b. for item 6, the actual rate is determined by the State Employment Security Dept. and varies by firm. It shall be verified by the contractor at the start of the project.

c. for item 7, the rate is based on L & I classification. The hourly dollar amount is specific to the firm/trade and shall be verified by the contractor at the start of the project.

d. definitions

1. items 1 & 2 are basic wages and benefits (see general conditions 7.02 B.7.a(1))
2. item 3, FUI is Federal Unemployment Tax Act (see general conditions 7.02 B.7.a(3))
3. item 4, FICA is Federal Insurance Compensation Act/Social Security (see general conditions 7.02B.7(3))
4. item 5, Medicare is FICA medical aid (see general conditions 7.02 B.7.a(3))
5. item 6, SUI is State Unemployment Compensation Act (see general conditions 7.02 B.7.a(3))
6. item 7, WC is Industrial insurance/workers' compensation (see general conditions 7.02 B.7.a(2))

COP Equipment Rates

Project Name: Riverfront Park Looff Carrousel Facility

Project No:

Contractor: Peterson Electric, Inc.

The Regional Adjustment used in this form = 0.986

A Equipment Description & Specifications (incl. Attachment Description, if applicable)	B Manufacturer	C Model # or Axle Config, Size, Capacity, etc.	D Year	E Power Mode (Diesel, Gasoline, Hydraulic, etc.)	F Blue Book Monthly Rate for Equipment	G Blue Book Monthly Rate for Attachment	H Hourly Rate = (F + G) / 176 x Regional Adj.	I Hourly Operating Cost	J **Total Hourly Rate = H + I**
							$-		$-
							$-		$-
							$-		$-
							$-		$-
							$-		$-
							$-		$-
							$-		$-
							$-		$-
							$-		$-
							$-		$-
							$-		$-
							$-		$-
							$-		$-
							$-		$-
							$-		$-
							$-		$-
							$-		$-
							$-		$-
							$-		$-
							$-		$-
							$-		$-
							$-		$-
							$-		$-
							$-		$-
							$-		$-
							$-		$-
							$-		$-
							$-		$-
							$-		$-
							$-		$-
							$-		$-
							$-		$-

Job ID: JOB-0004
Project: B16-015 Riverfront Park Looff Carousel

CO: CO-0018: CCD 034 - Motor Feeders

Takeoff

Vendor: BEST BUY + 15% **Labor Level:** LABOR 1 **28 Feb 2018 15:17:16**

Phase: FEEDERS

Item #	Qty	U/M	Q/M	Size	Description	Material Unit	Material Result	Labor Unit	Labor Result
	0				**NEW CONNECTION FROM MSB**				
80093	465	FT	M	3/0	XHHW COMPACT ALUM	0.7206	335.07	0.0234	10.88
70148	155	FT	M	6.	GREEN THHN CU (GRD 200A)	0.4560	70.68	0.0110	1.71
7	2		M	2-1/2	90 FLEX CONNECTOR	63.0000	126.00	0.2560	0.51
8	1		M	150	BREAKER PLUG	98.4600	98.46	0.1560	0.16
	0				**PREVIOUS CONNECTION FROM PANEL C**				
80093	-12	FT	M	3/0	XHHW COMPACT ALUM	0.7206	-8.65	0.0234	-0.28
70148	-12	FT	M	6.	GREEN THHN CU (GRD 200A)	0.4560	-5.47	0.0110	-0.13
					Phase Totals:		**616.10**		**12.84**
					Job Totals:		**616.10**		**12.84**

Peterson Electric
5622 N. MYRTLE ST
Spokane, WA 99217
Phone: (509) 489-1950
Web:

NAC
ARCHITECTURE

Construction Change Directive

To WALKER CONSTRUCTION

CCD No. 035
Project LOOFF CARROUSEL FACILITY
Date March 27, 2018
NAC No. 111 - 16004 - 10Fb
Owner Project No. 4312-16

in connection with your contract with City of Spokane dated January 27, 2017

In order to expedite the Work and avoid or minimize delays in the Work which may affect Contract Sum or Contract Time, you are hereby directed to make the following change(s). Submit final costs for Work involved and change in Contract Time (if any) for inclusion in a subsequent Change Order.

Title of CCD On-site Flaggers

Description ☐ Continued on page 2 (Use Alt + Enter to create new lines.)

Flaggers required on site for next 2 weeks.

Attachments

The proposed basis of adjustment to the Contract Sum is: (lump sum, unit price, per Subparagraph 7.3.3 of AIA Document A201, or other)

Change Addition **in Contract Sum of** TBD ☐ **Fixed** ☐ **Maximum**

Change not applicable **in Contract Time of** 0 **calendar days** ☐ **Fixed** ☐ **Maximum**

The amount covers all direct and indirect costs related to the change including effects of the change on the remainder of the project. All other provisions of the contract remain in full effect. Attached are Cost Proposal Breakdown Sheets.

Signature by the Contractor indicates the Contractor's agreement with the proposed adjustments in the Contract Sum and Contract Time set forth in the Construction Change Directive. When signed by the Owner and Architect and received by the Contractor, this document becomes effective IMMEDIATELY as a Construction Change Directive (CCD), and the Contractor shall proceed with the change(s) described above.

Contractor's Acceptance **Date** 5/16/18
Architect's Recommendation **Date**
Owner's Acceptance **Date**

As indicated above the Owner accepts the foregoing proposal and authorizes performance of the changes specified. If the Contract Sum or Contract Time are marked as "Maximum," firm amounts will be required from the Contractor, with backup documentation prior to issuance of CO.

Final Cost Based on back-up Documentation:

Final cost of change 38468
Final time change calendar days

Contractor's Acceptance **Date**
Architect's Recommendation **Date**
Owner's Acceptance **Date**

A Change Order (CO) will follow which includes the Authorization amount. Billing cannot be honored for the CCD until issuance of the CO.
Distribution: After all signatures, (1) original to Owner, (1) copy to Architect, (1) copy to Contractor.

CCD-035.xlsm

1203 West Riverside Avenue, Spokane, WA 99201-1107
509 838 8240 / nacarchitecture.com
Seattle / Spokane / Los Angeles

	Looff Carrousel									
			Description:	add traffic control						
CO req #									Revised	
Dated									Submitted	5/16/2018
SECTION	DESCRIPTION	UNIT	QUANTITY	U/P LABOR	U/P MATERIAL	U/P SUB	TOTAL LABOR	TOTAL MATERIALS	TOTAL SUBS	TOTAL
							0.00	0.00	0.00	0.00
	Northstar	ls	1	0	0	34235	0.00	0.00	34,235.00	34,235.00
							0.00	0.00	0.00	0.00
							0.00	0.00	0.00	0.00
							0.00	0.00	0.00	0.00
							0.00	0.00	0.00	0.00
							0.00	0.00	0.00	0.00
							0.00	0.00	0.00	0.00
							0.00	0.00	0.00	0.00
							0.00	0.00	0.00	0.00
							0.00	0.00	0.00	0.00
						SUBTOTAL	0.00	0.00	34,235.00	34,235.00
						BUR/RATE	0.52	0.02	0.02	
						BURDEN	0.00	0.00	684.70	684.70
							0.00	0.00	34,919.70	34,919.70
								SUP/MED	0	0.00
										34,919.70
								SUB OH&P	8%	2,793.58
										0.00
								WALKER OH&P	15%	0.00
										0.00
								ADJUST		0.00
										37,713.28
								BOND	0.02	754.27
								TOTAL	ADD	$ 38,468

Justin.Paine
4/23/2018
LG Phase Code - CC: 01.01835 Change Order #35
GL Extra:
GL Project List: 1701 Looff Carousel
GL Category List: S Subcontrators
GL Amount: 6755.00
GL Account: 10-10-4030 Subcontractors
Cost Center Managers:

INVOICE

NORTH STAR ENTERPRISES, INC.

P.O. BOX 607
LIBERTY LAKE, WA 99019
509.891.0892
509.922.3332 FAX

INVOICE NO. 19858
DATE April 6, 2018

Brett.Davidson
4/11/2018
Standard Information Check:
Vendor: North Star Enterprises, Inc.
Vendor Number: NOR2800
Invoice Date: 04/06/2018
Invoice Number: 19858
PO Number: 1701
Packing Slip Number:
Sub Total: 6,755.00
Tax: 0.00
Freight: 0.00
Total: 6,755.00

Brett.Davidson
4/11/2018
GL Phase Codes - CC:
GL Extras:
GL Project List: 1701 Looff Carousel
GL Category List: S Subcontrators
GL Amount: 6755.00
GL Account: 10-10-4030 Subcontractors
Cost Center Managers: Justin.Paine

TO

Walker Construction
P.O. Box 3901
Spokane, WA 99220

JOB	CONTRACT NUMBER	ORDERED BY	WEEK ENDING
Spokane Falls Blvd. & Post		Justin 990-4277	4/7/18

QUANTITY	DESCRIPTION	UNIT PRICE	LINE TOTAL
117.50	Traffic Control Labor ST	$ 46.00	$ 5,405.00
10.00	Traffic Control Labor OT	60.00	600.00
0.00	Traffic Control Labor DT	73.00	
0.00	Traffic Control Supervisor ST	-	
0.00	Traffic Control Supervisor OT	-	
5.00	Traffic Control Vehicle	150.00	750.00
0.00	Traffic Control Plan	100.00	
0.00	Arrow Board / week	250.00	
0.00	Additional Devices / week	175.00	
0.00	Devices / week	790.50	
0.00	Arrow Board / day	60.00	
0.00	Devices	21.00	
0.00	Arrow Board / hr.	7.00	
		SUBTOTAL	$ 6,755.00
		SALES TAX	
		TOTAL	$ 6,755.00

Balances over 30 days are subject to a 1.5% per month service charge.

THANK YOU FOR YOUR BUSINESS!

An Equal Opportunity Employer

PLEASE NOTE: THERE WILL BE A 3% SURCHARGE FOR CREDIT CARD PAYMENTS

Justin.Paine
5/16/2018
GL Phase Code - CC: 01.01835 Change Order #35
GL Extra:
GL Project List: 1701 Looff Carousel
GL Category List: S Subcontrators
GL Amount: 6870.00
GL Account: 10-10-4030 Subcontractors
Cost Center Managers:

Brett.Davidson
5/12/2018
Standard Information Check:
Vendor: North Star Enterprises, Inc.
Vendor Number: NOR2800
Invoice Date: 04/14/2018
Invoice Number: 19882
PO Number: 1701
Packing Slip Number:
Sub Total: 6,870.00
Tax: 0.00
Freight: 0.00
Total: 6,870.00

Brett.Davidson
5/12/2018
GL Phase Codes - CC:
GL Extras:
GL Project List: 1701 Looff Carousel
GL Category List: S Subcontrators
GL Amount: 6870.00
GL Account: 10-10-4030 Subcontractors
Cost Center Managers: Justin.Paine

INVOICE

NORTH STAR ENTERPRISES, INC.

P.O. BOX 607
LIBERTY LAKE, WA 99019
509.891.0892
509.922.3332 FAX

INVOICE NO. 19882
DATE April 16, 2018

TO

Walker Construction
P.O. Box 3901
Spokane, WA 99220

JOB	CONTRACT NUMBER	ORDERED BY	WEEK ENDING
Spokane Falls Blvd. & Post		Justin 990-4277	4/14/18

QUANTITY	DESCRIPTION	UNIT PRICE	LINE TOTAL
120.00	Traffic Control Labor ST	$ 46.00	$ 5,520.00
10.00	Traffic Control Labor OT	60.00	600.00
0.00	Traffic Control Labor DT	73.00	
0.00	Traffic Control Supervisor ST	-	
0.00	Traffic Control Supervisor OT	-	
5.00	Traffic Control Vehicle	150.00	750.00
0.00	Traffic Control Plan	100.00	
0.00	Arrow Board / week	250.00	
0.00	Additional Devices / week	175.00	
0.00	Devices / week	790.50	
0.00	Arrow Board / day	60.00	
0.00	Devices	21.00	
0.00	Arrow Board / hr.	7.00	
		SUBTOTAL	$ 6,870.00
		SALES TAX	
		TOTAL	$ 6,870.00

Balances over 30 days are subject to a 1.5% per month service charge.
THANK YOU FOR YOUR BUSINESS!
An Equal Opportunity Employer
PLEASE NOTE: THERE WILL BE A 3% SURCHARGE FOR CREDIT CARD PAYMENTS

E-MAILED 4/18/18

Justin.Paine
5/3/2018
GL Phase Code - CC: 01.01835 Change Order #35
GL Extra:
GL Project List: 1701 Looff Carousel
GL Category List: S Subcontrators
GL Amount: 6870.00
GL Account: 10-10-4030 Subcontractors
Cost Center Managers:

INVOICE

NORTH STAR ENTERPRISES, INC.

P.O. BOX 607
LIBERTY LAKE, WA 99019
509.891.0892
509.922.3332 FAX

INVOICE NO. 19913
DATE April 20, 2018

Brett.Davidson
4/29/2018
Standard Information Check:
Vendor: North Star Enterprises, Inc.
Vendor Number: NOR2800
Invoice Date: 04/20/2018
Invoice Number: 19913
PO Number: 1701
Packing Slip Number:
Sub Total: 6,870.00
Tax: 0.00
Freight: 0.00
Total: 6,870.00

Brett.Davidson
4/29/2018
GL Phase Codes - CC:
GL Extras:
GL Project List: 1701 Looff Carousel
GL Category List: S Subcontrators
GL Amount: 6870.00
GL Account: 10-10-4030 Subcontractors
Cost Center Managers: Justin.Paine

TO

Walker Construction
P.O. Box 3901
Spokane, WA 99220

JOB	CONTRACT NUMBER	ORDERED BY	WEEK ENDING
Spokane Falls Blvd. & Post		Justin 990-4277	4/21/18

QUANTITY	DESCRIPTION	UNIT PRICE	LINE TOTAL
120.00	Traffic Control Labor ST	$ 46.00	$ 5,520.00
10.00	Traffic Control Labor OT	60.00	600.00
0.00	Traffic Control Labor DT	73.00	
0.00	Traffic Control Supervisor ST	-	
0.00	Traffic Control Supervisor OT	-	
5.00	Traffic Control Vehicle	150.00	750.00
0.00	Traffic Control Plan	100.00	
0.00	Arrow Board / week	250.00	
0.00	Additional Devices / week	175.00	
0.00	Devices / week	790.50	
0.00	Arrow Board / day	60.00	
0.00	Devices	21.00	
0.00	Arrow Board / hr.	7.00	
		SUBTOTAL	$ 6,870.00
		SALES TAX	
		TOTAL	$ 6,870.00

Balances over 30 days are subject to a 1.5% per month service charge.
THANK YOU FOR YOUR BUSINESS!
An Equal Opportunity Employer
PLEASE NOTE: THERE WILL BE A 3% SURCHARGE FOR CREDIT CARD PAYMENTS

Brett.Davidson
5/4/2018
GL Phase Codes - CC:
GL Extras:
GL Project List: 1701 Looff Carousel
GL Category List: S Subcontrators
GL Amount: 6870.00
GL Account: 10-10-4030 Subcontractors
Cost Center Managers: Justin.Paine

INVOICE

NORTH STAR ENTERPRISES, INC.

P.O. BOX 607
LIBERTY LAKE, WA 99019
509.891.0892
509.922.3332 FAX

INVOICE NO. 19937
DATE April 27, 2018

Brett.Davidson
5/4/2018
Standard Information Check
Vendor: North Star Enterprises Inc
Vendor Number: NOR2800
Invoice Date: 04/27/2018
Invoice Number: 19937
PO Number: 1701
Packing Slip Number:
Sub Total: 6,870.00
Tax: 0.00
Freight: 0.00
Total: 6,870.00

Justin.Paine
5/16/2018
GL Phase Code - CC: 01.01835 Change Order #35
GL Extra:
GL Project List: 1701 Looff Carousel
GL Category List: S Subcontrators
GL Amount: 6870.00
GL Account: 10-10-4030 Subcontractors
Cost Center Managers:

TO

Walker Construction
P.O. Box 3901
Spokane, WA 99220

JOB	CONTRACT NUMBER	ORDERED BY	WEEK ENDING
Spokane Falls Blvd. & Post		Justin 990-4277	4/28/18

QUANTITY	DESCRIPTION	UNIT PRICE	LINE TOTAL
120.00	Traffic Control Labor ST	$ 46.00	$ 5,520.00
10.00	Traffic Control Labor OT	60.00	600.00
0.00	Traffic Control Labor DT	73.00	
0.00	Traffic Control Supervisor ST	-	
0.00	Traffic Control Supervisor OT	-	
5.00	Traffic Control Vehicle	150.00	750.00
0.00	Traffic Control Plan	100.00	
0.00	Arrow Board / week	250.00	
0.00	Additional Devices / week	175.00	
0.00	Devices / week	790.50	
0.00	Arrow Board / day	60.00	
0.00	Devices	21.00	
0.00	Arrow Board / hr.	7.00	
		SUBTOTAL	$ 6,870.00
		SALES TAX	
		TOTAL	$ 6,870.00

Balances over 30 days are subject to a 1.5% per month service charge.

THANK YOU FOR YOUR BUSINESS!

An Equal Opportunity Employer

PLEASE NOTE: THERE WILL BE A 3% SURCHARGE FOR CREDIT CARD PAYMENTS

INVOICE

NORTH STAR ENTERPRISES, INC.

P.O. BOX 607
LIBERTY LAKE, WA 99019
509.891.0892
509.922.3332 FAX

INVOICE NO. 19956
DATE May 7, 2018

TO

Walker Construction
P.O. Box 3901
Spokane, WA 99220

JOB	CONTRACT NUMBER	ORDERED BY	WEEK ENDING
Spokane Falls Blvd. & Post		Justin 990-4277	5/5/18

QUANTITY	DESCRIPTION	UNIT PRICE	LINE TOTAL
120.00	Traffic Control Labor ST	$ 46.00	$ 5,520.00
10.00	Traffic Control Labor OT	60.00	600.00
0.00	Traffic Control Labor DT	73.00	
0.00	Traffic Control Supervisor ST	-	
0.00	Traffic Control Supervisor OT	-	
5.00	Traffic Control Vehicle	150.00	750.00
0.00	Traffic Control Plan	100.00	
0.00	Arrow Board / week	250.00	
0.00	Additional Devices / week	175.00	
0.00	Devices / week	790.50	
0.00	Arrow Board / day	60.00	
0.00	Devices	21.00	
0.00	Arrow Board / hr.	7.00	
		SUBTOTAL	$ 6,870.00
		SALES TAX	
		TOTAL	$ 6,870.00

Balances over 30 days are subject to a 1.5% per month service charge.

THANK YOU FOR YOUR BUSINESS!

An Equal Opportunity Employer

PLEASE NOTE: THERE WILL BE A 3% SURCHARGE FOR CREDIT CARD PAYMENTS

NAC
ARCHITECTURE

Construction Change Directive

To WALKER CONSTRUCTION

CCD No. 037
Project LOOFF CARROUSEL FACILITY
Date March 27, 2018
NAC No. 111 - 16004 - 10Fb
Owner Project No. 4312-16

in connection with your contract with City of Spokane dated January 27, 2017

In order to expedite the Work and avoid or minimize delays in the Work which may affect Contract Sum or Contract Time, you are hereby directed to make the following change(s). Submit final costs for Work involved and change in Contract Time (if any) for inclusion in a subsequent Change Order.

Title of CCD Carrousel Deck Leveling

Description ☐ Continued on page 2 (Use Alt + Enter to create new lines.)

See next page.

Attachments

The proposed basis of adjustment to the Contract Sum is: (lump sum, unit price, per Subparagraph 7.3.3 of AIA Document A201, or other)

Change Addition in Contract Sum of TBD ☐ **Fixed** ☐ **Maximum**
Change not applicable in Contract Time of 0 **calendar days** ☐ **Fixed** ☐ **Maximum**

The amount covers all direct and indirect costs related to the change including effects of the change on the remainder of the project. All other provisions of the contract remain in full effect. Attached are Cost Proposal Breakdown Sheets.

Signature by the Contractor indicates the Contractor's agreement with the proposed adjustments in the Contract Sum and Contract Time set forth in the Construction Change Directive. When signed by the Owner and Architect and received by the Contractor, this document becomes effective IMMEDIATELY as a Construction Change Directive (CCD), and the Contractor shall proceed with the change(s) described above.

Contractor's Acceptance **Date** 5 16 18
Architect's Recommendation **Date**
Owner's Acceptance **Date**

As indicated above the Owner accepts the foregoing proposal and authorizes performance of the changes specified. If the Contract Sum or Contract Time are marked as "Maximum," firm amounts will be required from the Contractor, with backup documentation prior to issuance of CO.

Final Cost Based on back-up Documentation:

Final cost of change 9701
Final time change **calendar days**

Contractor's Acceptance **Date**
Architect's Recommendation **Date**
Owner's Acceptance **Date**

A Change Order (CO) will follow which includes the Authorization amount. Billing cannot be honored for the CCD until issuance of the CO.
Distribution: After all signatures, (1) original to Owner, (1) copy to Architect, (1) copy to Contractor.

CCD-037.xlsm

1203 West Riverside Avenue, Spokane, WA 99201-1107
509 838 8240 / nacarchitecture.com
Seattle / Spokane / Los Angeles

Construction Change Directive

CCD No. 037

Additional Description (Use Alt + Enter to create new lines.)

Installation of deck with slope to center of carrousel and fitment of each deck section as reqd. Paint 2" wide stripe at outside edge of deck (including bull nose) prior to application of finish coats. Provide color sample to owner for approval

>1203 West Riverside Avenue, Spokane, WA 99201-1107
509 838 8240 / nacarchitecture.com
Seattle / Spokane / Los Angeles

	Looff Carrousel									
			Description:	Slope deck						
CO req #									Revised	
Dated									Submitted	5/16/2018
SECTION	DESCRIPTION	UNIT	QUANTITY	U/P LABOR	U/P MATERIAL	U/P SUB	TOTAL LABOR	TOTAL MATERIALS	TOTAL SUBS	TOTAL
							0.00	0.00	0.00	0.00
							0.00	0.00	0.00	0.00
	Maurer	1	1			8633.24	0.00	0.00	8,633.24	8,633.24
							0.00	0.00	0.00	0.00
							0.00	0.00	0.00	0.00
							0.00	0.00	0.00	0.00
							0.00	0.00	0.00	0.00
							0.00	0.00	0.00	0.00
							0.00	0.00	0.00	0.00
							0.00	0.00	0.00	0.00
							0.00	0.00	0.00	0.00
							0.00	0.00	0.00	0.00
						SUBTOTAL	0.00	0.00	8,633.24	8,633.24
						BUR/RATE	0.52	0.02	0.02	
						BURDEN	0.00	0.00	172.66	172.66
							0.00	0.00	8,805.90	8,805.90
								SUP/MED	0	0.00
										8,805.90
								SUB OH&P	8%	704.47
										0.00
								WALKER OH&P	15%	0.00
										0.00
								ADJUST		0.00
										9,510.38
								BOND	0.02	190.21
								TOTAL	ADD	$ 9,701

MAUER CONSTRUCTION inc

Mauer Construction Inc.
2011 West Maxwell
Spokane, WA 99201
509.456.7646
509.456.7639
info@mauerinc.com

CHANGE ORDER

Project Name: Looff Carrousel
Project NO: 2407
C.O.R. NO: 1
Date: 4/17/18
Prime Contractor: Walker Construction

Description of Change: Modifying from flat plain shown in drawing to sloping disk
Extra coat of sealer

DESCRIPTION	Cost
On site modifying for slope	
66 hrs for carpenter/carpenter	$2,820.18
54 hrs for carpenter/tender	$1,998.54
1 extra coat of sealer (for a total of 2 coats sealer, 2 coats finish)	
2 gallons material	$124.00
4hrs for carpenter/carpenter	$170.92
Labor Burden (52%)	$2,594.61
Subtotal - Cost	$7,708.25
Profit/Overhead (12%)	$924.99
Wa. Sales Tax - Code 3210 - 8.8%	$678.33
Total	$9,311.57

NAC
ARCHITECTURE

Construction Change Directive

To WALKER CONSTRUCTION

CCD No. 039
Project LOOFF CARROUSEL FACILITY
Date April 4, 2018
NAC No. 111 - 16004 - 10Fb
Owner Project No. 4312-16

in connection with your contract with City of Spokane dated January 27, 2017

In order to expedite the Work and avoid or minimize delays in the Work which may affect Contract Sum or Contract Time, you are hereby directed to make the following change(s). Submit final costs for Work involved and change in Contract Time (if any) for inclusion in a subsequent Change Order.

Title of CCD Carrousel Sequence of Operation Controls

Description ☑ Continued on page 2 (Use Alt + Enter to create new lines.)

See next page.

Attachments

The proposed basis of adjustment to the Contract Sum is: (lump sum, unit price, per Subparagraph 7.3.3 of AIA Document A201, or other)

Change Addition **in Contract Sum of** TBD ☐ **Fixed** ☐ **Maximum**

Change not applicable **in Contract Time of** 0 **calendar days** ☐ **Fixed** ☐ **Maximum**

The amount covers all direct and indirect costs related to the change including effects of the change on the remainder of the project. All other provisions of the contract remain in full effect. Attached are Cost Proposal Breakdown Sheets.

Signature by the Contractor indicates the Contractor's agreement with the proposed adjustments in the Contract Sum and Contract Time set forth in the Construction Change Directive. When signed by the Owner and Architect and received by the Contractor, this document becomes effective IMMEDIATELY as a Construction Change Directive (CCD), and the Contractor shall proceed with the change(s) described above.

Contractor's Acceptance **Date** 5/5/18
Architect's Recommendation **Date**
Owner's Acceptance **Date**

As indicated above the Owner accepts the foregoing proposal and authorizes performance of the changes specified. If the Contract Sum or Contract Time are marked as "Maximum," firm amounts will be required from the Contractor, with backup documentation prior to issuance of CO.

Final Cost Based on back-up Documentation:

Final cost of change ~~6126~~ 6126
Final time change calendar days

Contractor's Acceptance **Date**
Architect's Recommendation **Date**
Owner's Acceptance **Date**

A Change Order (CO) will follow which includes the Authorization amount. Billing cannot be honored for the CCD until issuance of the CO.
Distribution: After all signatures, (1) original to Owner, (1) copy to Architect, (1) copy to Contractor.

CCD-039.xlsm

1203 West Riverside Avenue, Spokane, WA 99201-1107
509 838 8240 / nacarchitecture.com
Seattle / Spokane / Los Angeles

Construction Change Directive

CCD No. 039

Additional Description (Use Alt + Enter to create new lines.)

1. The city shall provide the contractor with messages and music in WMV or MP3 format. The message and music shall be loaded onto corresponding media players for automatic playback. Written directions for loading new media content shall be provided to the owner as part of the owner training with a copy placed in the operation and maintenance manual.

2. Add (2) separate gate control buttons at the operator stand. One button for entry and one button for exit. Gate controls shall be provided at (2) console location as described herein. Provide all cabling, controls, and raceway for a complete and operational system.

3. Reconfigure (2) control consoles at the operators stand. Provide (1) 9-button console at the upper stand containing all carrousel buttons to include, but not limited to, emergency stops, messages, exit/entry gate open/close, etc. The upper console shall be provided by Control Freek. Provide (1) 4-button console at the floor level adjacent to the stairs and containing emergency stop, message, and gate buttons. The lower console shall be provided by EVCO. The console contractors shall coordinate with one another for button configuration, cabling needs and separation of work. Provide all cabling, controls, and raceway for two complete and operational console systems.

4. Delete (1) duplex receptacle at the ring toss stand. Add (1) emergency stop mounted on the side of ring toss stand at 3'-10". Repurpose the existing power condult for routing of emergency stop control wiring. Provide all cabling and raceway for a complete and operational system. The emergency stop shall be a Sheinder #9001KYG1Y1.

5. Add (1) duplex receptacle shall be added at the operators stand for a monitor. Provide all cabling, boxes, receptacles, and raceway for a complete power outlet.

>1203 West Riverside Avenue, Spokane, WA 99201-1107
509 838 8240 / nacarchitecture.com
Seattle / Spokane / Los Angeles

WALKER CONSTRUCTION

Looff Carrousel

Description: Added controls

CO req #

Dated

SECTION	DESCRIPTION	UNIT	QUANTITY	U/P LABOR	U/P MATERIAL	U/P SUB	TOTAL LABOR	TOTAL MATERIALS	TOTAL SUBS	Revised Submitted 5/15/2018 TOTAL
							0.00	0.00	0.00	0.00
	Peterson	ls	1	0	0	5452	0.00	0.00	5,452.00	5,452.00
							0.00	0.00	0.00	0.00
							0.00	0.00	0.00	0.00
							0.00	0.00	0.00	0.00
							0.00	0.00	0.00	0.00
							0.00	0.00	0.00	0.00
							0.00	0.00	0.00	0.00
							0.00	0.00	0.00	0.00
							0.00	0.00	0.00	0.00
							0.00	0.00	0.00	0.00
							0.00	0.00	0.00	0.00
						SUBTOTAL	0.00	0.00	5,452.00	5,452.00
						BUR/RATE	0.52	0.02	0.02	
						BURDEN	0.00	0.00	109.04	109.04
							0.00	0.00	5,561.04	5,561.04
								SUP/MED	0	0.00
										5,561.04
								SUB OH&P	8%	444.88
										0.00
								WALKER OH&P	15%	0.00
										0.00
								ADJUST		0.00
										6,005.92
								BOND	0.02	120.12
								TOTAL	ADD	$ 6,126

PETERSON Electric Inc.

Peterson Electric – Change Order Break Down

Project Name: Riverfront Park Looff Carrousel Facility

COP No. CCD-039

Project No.

Source Documents: CCD-039

Date: 5/3/2018

Contractor: Peterson Electric, Inc.

Contractor Ref. No. CCD-039

Description: CCD-039 Added Controls

1. CRAFT LABOR COSTS		Itemize all costs on attached COP Cost Breakdown form.	
Direct Labor Costs:			
a. crew (apprentices, journeymen, & laborers)			
b. foreman		$587.65	
c. lead foreman		$-	
DIRECT LABOR SUBTOTAL		$587.65	
Supervision:			
d. direct supervison (NTE 15% of 1a)		$-	
e. safety (NTE 2% of lines 1a, b, & c)		$11.75	
1. CRAFT LABOR COSTS			$599.00
2. MATERIAL COSTS			
a. material costs		$126.95	
b. freight costs (itemize)		$-	
2. MATERIAL COSTS			$127.00
3. EQUIPMENT COSTS			
a. owned equipment (per spec approved source)		$-	
b. rental equipment (per invoices attached)		$-	
3. EQUIPMENT COSTS			$-
4. SMALL TOOLS			
a. small tools (NTE 5% of 1a & b)		$29.38	
4. SMALL TOOLS			$29.00
SUBTOTAL 1 thru 4			$755.00
5. OVERHEAD & PROFIT			
a. NTE 15% portion of 1, 2, 3, & 4		$113.25	
5. OVERHEAD & PROFIT			$113.00
6. SUB-SUBCONTRACTORS			
a. EVCO		$2,301.57	
b. Control Freek		$1,860.00	
c.		$-	
d.		$-	
6. SUB-SUBCONTRACTORS			$4,162.00
7. OVERHEAD & PROFIT ON SUB-SUBCONTRACTORS			
a. NTE 8% of Line 6 up to $50,000 for each sub		$332.93	
b. NTE 6% of Line 6 in excess of $50,000 for each sub		$-	
7. OVERHEAD & PROFIT ON SUB-SUBCONTRACTORS			$333.00
8. INSURANCE			
a. payroll driven liability insurance	1.50 % of 1	$8.99	
b. volume driven liability insurance	1.50 % of 1-7	$80.45	
8. INSURANCE			$89.00
9. BOND			
a. bond	0.00 % of 1-8	$-	
9. BOND			$-
TOTAL COST			$5,452.00

COP Cost Breakdown

Project Name: Riverfront Park Looff Carrousel Facility
Project No.
Contractor: Peterson Electric, Inc.

COP No. CCD-039
Date: 5/3/2018
Contractor Ref. No. CCD-039

	Description	Quantity	Unit Type	Labor		Material		Equipment		Total Cost
				Unit $	Cost	Unit $	Cost	Unit $	Cost	
	Foreman Labor	9.61		$61.15	$587.65		$-		$-	$587.65
					$-		$-		$-	$-
					$-		$-		$-	$-
	Material (See Take Off)	1			$-	$126.95	$126.95		$-	$126.95
					$-		$-		$-	$-
					$-		$-		$-	$-
					$-		$-		$-	$-
					$-		$-		$-	$-
					$-		$-		$-	$-
					$-		$-		$-	$-
					$-		$-		$-	$-
					$-		$-		$-	$-
					$-		$-		$-	$-
					$-		$-		$-	$-
					$-		$-		$-	$-
					$-		$-		$-	$-
					$-		$-		$-	$-
					$-		$-		$-	$-
					$-		$-		$-	$-
					$-		$-		$-	$-
					$-		$-		$-	$-
					$-		$-		$-	$-
					$-		$-		$-	$-
					$-		$-		$-	$-
					$-		$-		$-	$-
					$-		$-		$-	$-
					$-		$-		$-	$-
					$-		$-		$-	$-
	Labor Subtotal				**$587.65**					
	Foreman				$-		$-		$-	$-
	Lead Foreman				$-		$-		$-	$-
					$-		$-		$-	$-
Total Cost of Work		Form Revised 6/1/2004			**$587.65**		**$126.95**		**$-**	**$714.60**

COP Wage Rates

Project Name: Riverfront Park Looff Carrousel Facility

Project No:

Contractor: Peterson Electric, Inc.

Trade & Position		JOURNEYMAN	FOREMAN	GF	60.00%	65.00%	70.00%	75.00%	80.00%	85.00%	90.00%
Rate Schedule Date*											
Prevailing Wage (incl. Benefits)											
1. Hourly Wage Rate		$31.50	$34.64	$37.80	$19.90	$20.48	$22.05	$23.63	$25.20	$26.78	$28.35
2. Hourly Benefits		$17.92	$18.02	$18.13	$9.30	$9.35	$15.18	$15.59	$16.00	$16.39	$16.80
SUBTOTAL		**$49.42**	**$52.66**	**$55.93**	**$29.20**	**$29.83**	**$37.23**	**$39.22**	**$41.20**	**$43.17**	**$45.15**
	Rate										
3. FUI % of 1	0.60%	$0.25	$0.28	$0.30	$0.16	$0.16	$0.18	$0.19	$0.20	$0.21	$0.23
4. FICA % of 1	6.20%	$1.95	$2.15	$2.34	$1.23	$1.27	$1.37	$1.47	$1.56	$1.66	$1.76
5. MEDICARE % of 1	1.45%	$0.46	$0.50	$0.55	$0.29	$0.30	$0.32	$0.34	$0.37	$0.39	$0.41
6. SUI % of 1 (insert correct % to right)	3.41%	$1.07	$1.18	$1.29	$0.68	$0.70	$0.75	$0.81	$0.86	$0.91	$0.97
7. WC (insert $ amount per hour)		$2.09	$2.19	$2.26	$0.67	$1.83	$1.87	$1.92	$1.95	$1.98	$2.03
TOTAL (incl. payroll taxes)		**$55.25**	**$58.96**	**$62.67**	**$32.23**	**$34.09**	**$41.72**	**$43.94**	**$46.14**	**$48.33**	**$50.54**

NOTES: * Rate schedule date is the date of the Dept. of Labor & Industries Prevailing Wage Rate used or the Union Agreement.

a. for items 3 thru 5, the Federal rates do not vary by firm, and the percentages are already locked into this form.

b. for item 6, the actual rate is determined by the State Employment Security Dept. and varies by firm. It shall be verified by the contractor at the start of the project.

c. for item 7, the rate is based on L & I classification. The hourly dollar amount is specific to the firm/trade and shall be verified by the contractor at the start of the project.

d. definitions

1. items 1 & 2 are basic wages and benefits (see general conditions 7.02 B.7.a(1))
2. item 3, FUI is Federal Unemployment Tax Act (see general conditions 7.02 B.7.a(3))
3. item 4, FICA is Federal Insurance Compensation Act/Social Security (see general conditions 7.02B.7(3))
4. item 5, Medicare is FICA medical aid (see general conditions 7.02 B.7.a(3))
5. item 6, SUI is State Unemployment Compensation Act (see general conditions 7.02 B.7.a(3))
6. item 7, WC is industrial insurance/workers' compensation (see general conditions 7.02 B.7.a(2))

Job ID: JOB-0004
Project: B16-015 Riverfront Park Looff Carousel

CO: CO-0019: CCD 039 - Added Buttons

Takeoff

Vendor: BEST BUY + 54% **Labor Level:** LABOR 1 **3 May 2018 15:05:03**

Phase: MISCELLANEOUS

Item #	Qty	U/M	Q/M	Size	Description	Material Unit	Material Result	Labor Unit	Labor Result
	0.00				**SEPERATE LOWER CONTROLS AT OPERATOR STAND**				
TITLE	10.00	EA	M	EMPTY	3/4 EMT ON STRUT	0.0000	0.00	0.0000	0.00
10054	10.00	FT	M	3/4	EMT	0.8254	8.25	0.0465	0.47
20737	4.00	EA	M	3/4	EMT FIELD-BEND	0.0000	0.00	0.1920	0.77
30518	2.00	EA	M	3/4	EMT STEEL-COMP COUPLING	0.4027	0.81	0.1302	0.26
30664	2.00	EA	M	3/4	EMT STEEL COMP IN-THRT CONN	1.0127	2.03	0.3000	0.60
40210	2.00	EA	M	3/4	PLASTIC BUSHING	0.1183	0.24	0.1200	0.24
630190	2.00	EA	M	3/4	COND 1-PC w/BOLT STL STRUT CLAMP	0.7301	1.46	0.0300	0.06
TITLE	1.00	EA	M	3/8-BEAM-CLAMP	TRAPEZE /STL-BEAM	0.0000	0.00	0.0000	0.00
240009	12.00	FT	M	1 5/8" x 1 5/8"H	12G STRUT CHNL 1-1/8"SLOT GREEN	2.8600	34.32	0.1225	1.47
160177	2.00	EA	M	3/8-16	PLTD BEAM CLAMP	5.0902	10.18	0.3000	0.60
240329	2.00	EA	M	1/2-ZN	STRUT NO TWIST SQ WASHER	2.7347	5.47	0.0400	0.08
160930	6.00	EA	M	3/8-16	PLTD HEX NUTS	0.1214	0.73	0.0360	0.22
160395	6.00	EA	M	3/8"	PLTD FLAT WASHER	0.1694	1.02	0.0012	0.01
160405	6.00	EA	M	3/8"	PLTD LOCK WASHER	0.0961	0.58	0.0012	0.01
	0.00				**REPURPOSE THE EXISTING POWER CONDUIT FOR ROUTING OF EMERGENCY STOP**				
50002	15.00	FT	M	3/4	FLEXIBLE STEEL CONDUIT	0.7275	10.91	0.0500	0.75
50042	1.00	EA	M	3/4	FLEX COND STRAIGHT CONN	2.1845	2.18	0.1400	0.14
50031	1.00	EA	M	3/4	FLEX COND ANGLE CONN	8.0613	8.06	0.1680	0.17
10054	10.00	FT	M	3/4	EMT	0.8254	8.25	0.0500	0.50
20737	2.00	EA	M	3/4	EMT FIELD-BEND	0.0000	0.00	0.1920	0.38
150502	1.00	EA	M	2" DEEP 16.5-CI	1G ALUM WP BOX W/ 4 x 3/4"HUBS	7.7958	7.80	0.6000	0.60
30634	2.00	EA	M	3/4	EMT STEEL SS INS-THRT CONN	0.6305	1.26	0.1000	0.20
161558	2.00	EA	M	3/4	EMT 1-HOLE STEEL STRAP	0.1210	0.24	0.0400	0.08
	0.00				**ADDED OUTLET AT OPERATOR STAND**				
TITLE	1.00	EA	M	3/4 EMT #12	20A-1G-DX-COM	0.0000	0.00	0.0000	0.00

Phase: MISCELLANEOUS

Item #	Qty	U/M	Q/M	Size	Description	Material Unit	Material Result	Labor Unit	Labor Result
100152	1.00	EA	M	#12 SOL	8" PIGTAIL W/GRD SCREW	1.9025	1.90	0.0600	0.06
100168	1.00	EA	M	18-12	PSH-IN 4-WIRE CONN	0.1648	0.16	0.0390	0.04
100167	1.00	EA	M	18-12	PSH-IN 3-WIRE CONN	0.1475	0.15	0.0325	0.03
10054	6.00	FT	M	3/4	EMT	0.8254	4.95	0.0470	0.28
30664	2.00	EA	M	3/4	EMT STEEL COMP IN-THRT CONN	1.0127	2.03	0.3000	0.60
30518	1.00	EA	M	3/4	EMT STEEL-COMP COUPLING	0.4027	0.40	0.1316	0.13
70033	14.00	FT	M	12	THHN/THWN CU (STR)	0.1645	2.30	0.0060	0.08
70145	7.00	FT	M	12	GREEN THHN CU (GRD 20A)	0.1645	1.15	0.0060	0.04
630111	1.00	EA	M	3/4	COND HAMMER-ON HGR 1/4-FLANGE PUSH-IN HD	2.0818	2.08	0.0600	0.06
161558	2.00	EA	M	3/4	EMT 1-HOLE STEEL STRAP	0.1210	0.24	0.0400	0.08
150502	1.00	EA	M	2" DEEP 16.5-CI	1G ALUM WP BOX W/ 4 x 3/4"HUBS	7.7958	7.80	0.6000	0.60
					Phase Totals:		**126.95**		**9.61**
					Job Totals:		**126.95**		**9.61**

Peterson Electric
5622 N. MYRTLE ST
Spokane, WA 99217
Phone: (509) 489-1950
Web:

Evco Sound & Electronics, Inc.

QUOTATION: 5399
Evco Sound & Electronics Inc.
3511 E Trent Ave
Spokane, WA 99202

BILL TO:		JOB LOCATION:			
COMPANY:	Peterson Electric Inc	COMPANY:	Peterson Electric Inc	DATE:	April 12, 2018
ADDRESS:	5622 N Myrtle St	ADDRESS:	5622 N Myrtle St	SALES REP:	Joseph Melton
				PHONE:	EXT
	Spokane, WA 99217		Spokane, WA 99217	EMAIL:	joe@evcosound.com
CONTACT:		CONTACT:			
PHONE:	(509) 489-1950	PHONE:	(509) 489-1950		

TITLE:

Looff Carrousel - CCD-039 - Sound Button Add

SCOPE OF WORK:

Provide additional 4 button console at lower level of ring toss stand. Provide associated hardware, programming and installation.

PART NUMBER	PART DESCRIPTION	QTY	UNIT PRICE	TOTAL PRICE
C2N-UNI8IO	Universal Keypad Interface	1.00	$132.87	$132.87
PROGRAMMING/IT	Programming/IT Services	1.00	$100.00	$100.00
HOFFMAN-CUSTOM	CUSTOM QUOTES	1.00	$181.82	$181.82
ENGRAVER-SPOKANE	CUSTOM ENGRAVING LABEL	1.00	$69.93	$69.93
ENGRAVER-SPOKANE	CUSTOM ENGRAVING LABEL	1.00	$69.93	$69.93
DRAFTING	Drafting Services	4.00	$59.38	$237.52
PROGRAMMING/IT	Programming/IT Services	8.00	$100.00	$800.00
INSTALLATION	Installation Services	8.00	$72.50	$580.00
TEST/ONSITE	On-site Testing	1.00	$72.50	$72.50
TRAVEL	Travel Time	0.50	$100.00	$50.00
MILEAGE	Distance Traveled	7.00	$1.00	$7.00

SUBTOTAL:	$2301.57
TAX:	$0.00
TOTAL:	$2301.57

IF YOU WISH TO ACCEPT THIS PROPOSAL AND RELATED STATEMENT OF WORK, PLEASE SIGN AND RETURN

BUYER:_____ (Print Name)

BUYER SIGNATURE:_____

DATE:_____

CONTROLFREEK INC.

PO Box 142192
Spokane Valley, WA 99214

INVOICE

Date	Invoice #
4/9/2018	3182

PHONE 509.290.6500
FAX 866.381.3007
MANDIE@CONTROLFREEK.COM
WWW.CONTROLFREEK.COM
PHYSICAL LOCATION:
11616 E Montomery Dr. Ste 4
Spokane Valley, WA 99206

Bill To
Peterson Electric, Inc.
5622 North Myrtle Street
Spokane, WA 99217-6563

Proudly Made
in the
United States of America

...2017 marked 10 years in business...
Thank you!

P.O. No.	Terms
1422-03	Net 30

Description	Amount
PROGRESS BILLING - LOOFF CAROUSEL Change Order CCD-039 Additional Selector switch, 9-hole enclosure and additional programming	1,860.00
PROGRESS BILLING	

Total $1,860.00

Federal ID 20-8169435

170307 L...

NAC
ARCHITECTURE

Construction Change Directive

To WALKER CONSTRUCTION

CCD No. 040
Project LOOFF CARROUSEL FACILITY
Date April 18, 2018
NAC No. 111 - 16004 - 10Fb
Owner Project No. 4312-16

in connection with your contract with City of Spokane dated January 27, 2017

In order to expedite the Work and avoid or minimize delays in the Work which may affect Contract Sum or Contract Time, you are hereby directed to make the following change(s). Submit final costs for Work involved and change in Contract Time (if any) for inclusion in a subsequent Change Order.

Title of CCD Music Player

Description ☑ Continued on page 2 (Use Alt + Enter to create new lines.)

In telecom room 108 sound system equipment rack add (1) Tascam CD-400U player. Install, program and provide owner training for music loading.

Attachments

The proposed basis of adjustment to the Contract Sum is: (lump sum, unit price, per Subparagraph 7.3.3 of AIA Document A201, or other)

Change Addition **In Contract Sum of** TBD ☐ **Fixed** ☐ **Maximum**

Change not applicable **in Contract Time of** 0 **calendar days** ☐ **Fixed** ☐ **Maximum**

The amount covers all direct and indirect costs related to the change including effects of the change on the remainder of the project. All other provisions of the contract remain in full effect. Attached are Cost Proposal Breakdown Sheets.

Signature by the Contractor indicates the Contractor's agreement with the proposed adjustments in the Contract Sum and Contract Time set forth in the Construction Change Directive. When signed by the Owner and Architect and received by the Contractor, this document becomes effective IMMEDIATELY as a Construction Change Directive (CCD), and the Contractor shall proceed with the change(s) described above.

Contractor's Acceptance **Date** 5/8/18
Architect's Recommendation **Date**
Owner's Acceptance **Date**

As indicated above the Owner accepts the foregoing proposal and authorizes performance of the changes specified. If the Contract Sum or Contract Time are marked as "Maximum," firm amounts will be required from the Contractor, with backup documentation prior to issuance of CO.

Final Cost Based on back-up Documentation:

Final cost of change 725
Final time change 8 **calendar days**

Contractor's Acceptance **Date**
Architect's Recommendation **Date**
Owner's Acceptance **Date**

A Change Order (CO) will follow which includes the Authorization amount. Billing cannot be honored for the CCD until issuance of the CO.
Distribution: After all signatures, (1) original to Owner, (1) copy to Architect, (1) copy to Contractor.

CCD-040.xlsm

>1203 West Riverside Avenue, Spokane, WA 99201-1107
509 838 8240 / nacarchitecture.com
Seattle / Spokane / Los Angeles

Construction Change Directive

CCD No. 040

Additional Description

(Use Alt + Enter to create new lines.)

>1203 West Riverside Avenue, Spokane, WA 99201-1107
509 838 8240 / nacarchitecture.com
Seattle / Spokane / Los Angeles

WALKER CONSTRUCTION

Looff Carrousel

Description:

CO req #

Dated

SECTION	DESCRIPTION	UNIT	QUANTITY	U/P LABOR	U/P MATERIAL	U/P SUB	TOTAL LABOR	TOTAL MATERIALS	Revised Submitted TOTAL SUBS	5/18/2018 TOTAL
							0.00	0.00	0.00	0.00
							0.00	0.00	0.00	0.00
	Peterson	ls	1	0	0	645	0.00	0.00	645.00	645.00
							0.00	0.00	0.00	0.00
							0.00	0.00	0.00	0.00
							0.00	0.00	0.00	0.00
							0.00	0.00	0.00	0.00
							0.00	0.00	0.00	0.00
							0.00	0.00	0.00	0.00
							0.00	0.00	0.00	0.00
							0.00	0.00	0.00	0.00
						SUBTOTAL	0.00	0.00	645.00	645.00
						BUR/RATE	0.52	0.02	0.02	
						BURDEN	0.00	0.00	12.90	12.90
							0.00	0.00	657.90	657.90
								SUP/MED	0	0.00
										657.90
								SUB OH&P	8%	52.63
										0.00
								WALKER OH&P	15%	0.00
										0.00
								ADJUST		0.00
										710.53
								BOND	0.02	14.21
								TOTAL	ADD	$ 725

PETERSON Electric Inc.

Peterson Electric – Change Order Break Down

Project Name: Riverfront Park Looff Carrousel Facility

COP No. CCD-040

Project No.

Source Documents: CCD-040

Date: 5/3/2018

Contractor: Peterson Electric, Inc.

Contractor Ref. No. CCD-040

Description: CCD-040 – Add music player

1. CRAFT LABOR COSTS		Itemize all costs on attached COP Cost Breakdown form.	
Direct Labor Costs:			
a. crew (apprentices, journeymen, & laborers)			
b. foreman			
c. lead foreman		$-	
DIRECT LABOR SUBTOTAL		$-	
Supervision:			
d. direct supervison (NTE 15% of 1a)		$-	
e. safety (NTE 2% of lines 1a, b, & c)		$-	
1. CRAFT LABOR COSTS			$-
2. MATERIAL COSTS			
a. material costs			
b. freight costs (itemize)		$-	
2. MATERIAL COSTS			$-
3. EQUIPMENT COSTS			
a. owned equipment (per spec approved source)		$-	
b. rental equipment (per invoices attached)		$-	
3. EQUIPMENT COSTS			$-
4. SMALL TOOLS			
a. small tools (NTE 5% of 1a & b)		$-	
4. SMALL TOOLS			$-
SUBTOTAL 1 thru 4			$-
5. OVERHEAD & PROFIT			
a. NTE 15% portion of 1, 2, 3, & 4		$-	
5. OVERHEAD & PROFIT			$-
6. SUB-SUBCONTRACTORS			
a. EVCO		$587.55	
b.			
c.		$-	
d.		$-	
6. SUB-SUBCONTRACTORS			$588.00
7. OVERHEAD & PROFIT ON SUB-SUBCONTRACTORS			
a. NTE 8% of Line 6 up to $50,000 for each sub		$47.00	
b. NTE 6% of Line 6 in excess of $50,000 for each sub		$-	
7. OVERHEAD & PROFIT ON SUB-SUBCONTRACTORS			$47.00
8. INSURANCE			
a. payroll driven liability insurance	1.50 % of 1	$-	
b. volume driven liability insurance	1.50 % of 1-7	$9.53	
8. INSURANCE			$10.00
9. BOND			
a. bond	0.00 % of 1-8	$-	
9. BOND			$-
TOTAL COST			$645.00

Evco Sound & Electronics, Inc.

QUOTATION: 5508
Evco Sound & Electronics Inc.
3511 E Trent Ave
Spokane, WA 99202

BILL TO:		JOB LOCATION:			
COMPANY:	Peterson Electric Inc	COMPANY:	Peterson Electric Inc	DATE:	April 18, 2018
ADDRESS:	5622 N Myrtle St	ADDRESS:	5622 N Myrtle St	SALES REP:	Joseph Melton
				PHONE:	EXT
	Spokane, WA 99217		Spokane, WA 99217	EMAIL:	joe@evcosound.com
CONTACT:		CONTACT:			
PHONE:	(509) 489-1950	PHONE:	(509) 489-1950		

TITLE:

CCD-040 Music Player

SCOPE OF WORK:

PART NUMBER	PART DESCRIPTION	QTY	UNIT PRICE	TOTAL PRICE
CD-400U	CD/MEDIA PLAYER	1.00	$402.80	$402.80
SHIP-HANDLE	Shipping and Handling	1.00	$21.00	$21.00
ENGINEERING	Engineering Services	1.00	$91.25	$91.25
INSTALLATION	Installation Services	1.00	$72.50	$72.50

SUBTOTAL:	$587.55
TAX:	$0.00
TOTAL:	$587.55

IF YOU WISH TO ACCEPT THIS PROPOSAL AND RELATED STATEMENT OF WORK, PLEASE SIGN AND RETURN

BUYER:_____ (Print Name)

BUYER SIGNATURE:_____

DATE:_____

NAC
ARCHITECTURE

Construction Change Directive

To WALKER CONSTRUCTION

CCD No. 041
Project LOOFF CARROUSEL FACILITY
Date April 25, 2018
NAC No. 111 - 16004 - 10Fb
Owner Project No. 4312-16

in connection with your contract with City of Spokane dated January 27, 2017

In order to expedite the Work and avoid or minimize delays in the Work which may affect Contract Sum or Contract Time, you are hereby directed to make the following change(s). Submit final costs for Work involved and change in Contract Time (if any) for inclusion in a subsequent Change Order.

Title of CCD Carrousel Light Connections

Description ☐ Continued on page 2 (Use Alt + Enter to create new lines.)

Final electrical connections for lights on the carrousel (LED bulbs provided by Owner); Install a manual switch located on the tree support.

Attachments

The proposed basis of adjustment to the Contract Sum is: (lump sum, unit price, per Subparagraph 7.3.3 of AIA Document A201, or other)

Change Addition **in Contract Sum of** TBD ☐ **Fixed** ☐ **Maximum**

Change not applicable **in Contract Time of** 0 **calendar days** ☐ **Fixed** ☐ **Maximum**

The amount covers all direct and indirect costs related to the change including effects of the change on the remainder of the project. All other provisions of the contract remain in full effect. Attached are Cost Proposal Breakdown Sheets.

Signature by the Contractor indicates the Contractor's agreement with the proposed adjustments in the Contract Sum and Contract Time set forth in the Construction Change Directive. When signed by the Owner and Architect and received by the Contractor, this document becomes effective IMMEDIATELY as a Construction Change Directive (CCD), and the Contractor shall proceed with the change(s) described above.

Contractor's Acceptance **Date** 5-15-18
Architect's Recommendation **Date**
Owner's Acceptance **Date**

As indicated above the Owner accepts the foregoing proposal and authorizes performance of the changes specified. If the Contract Sum or Contract Time are marked as "Maximum," firm amounts will be required from the Contractor, with backup documentation prior to issuance of CO.

Final Cost Based on back-up Documentation:

Final cost of change $326
Final time change **calendar days**

Contractor's Acceptance **Date**
Architect's Recommendation **Date**
Owner's Acceptance **Date**

A Change Order (CO) will follow which includes the Authorization amount. Billing cannot be honored for the CCD until issuance of the CO.
Distribution: After all signatures, (1) original to Owner, (1) copy to Architect, (1) copy to Contractor.

CCD-041.xlsm

>1203 West Riverside Avenue, Spokane, WA 99201-1107
509 838 8240 / nacarchitecture.com
Seattle / Spokane / Los Angeles

Construction Change Directive

CCD No. 041

Additional Description (Use Alt + Enter to create new lines.)

>1203 West Riverside Avenue, Spokane, WA 99201-1107
509 838 8240 / nacarchitecture.com
Seattle / Spokane / Los Angeles

WALKER CONSTRUCTION

Looff Carrousel

Description: Carrousel Lights

CO req #

Dated

SECTION	DESCRIPTION	UNIT	QUANTITY	U/P LABOR	U/P MATERIAL	U/P SUB	TOTAL LABOR	TOTAL MATERIALS	Revised Submitted TOTAL SUBS	5/15/2018 TOTAL
							0.00	0.00	0.00	0.00
	Peterson Electric	ls	1	0	0	4740	0.00	0.00	4,740.00	4,740.00
							0.00	0.00	0.00	0.00
							0.00	0.00	0.00	0.00
							0.00	0.00	0.00	0.00
							0.00	0.00	0.00	0.00
							0.00	0.00	0.00	0.00
							0.00	0.00	0.00	0.00
							0.00	0.00	0.00	0.00
							0.00	0.00	0.00	0.00
							0.00	0.00	0.00	0.00
							0.00	0.00	0.00	0.00
						SUBTOTAL	0.00	0.00	4,740.00	4,740.00
						BUR/RATE	0.52	0.02	0.02	
						BURDEN	0.00	0.00	94.80	94.80
							0.00	0.00	4,834.80	4,834.80
								SUP/MED	0	0.00
										4,834.80
								SUB OH&P	8%	386.78
										0.00
								WALKER OH&P	15%	0.00
										0.00
								ADJUST		0.00
										5,221.58
								BOND	0.02	104.43
								TOTAL	ADD	$ 5,326

Accepted by Contractor:	Recommended By:	Approved by Owner:
Walker Construction, Inc.	NAC	
By:	By:	By:
Date:	Date:	Date:

PETERSON Electric Inc.

Peterson Electric – Change Order Break Down

Project Name: Riverfront Park Looff Carrousel Facility

Project No.

Source Documents: CCD-041

Contractor: Peterson Electric, Inc.

Description: Rewire carousel lights

COP No. CCD-041

Date: 5/8/2018

Contractor Ref. No. CCD-041

Itemize all costs on attached COP Cost Breakdown form.

1. CRAFT LABOR COSTS			
Direct Labor Costs:			
a. crew (apprentices, journeymen, & laborers)			
b. foreman		$3,179.80	
c. lead foreman		$-	
DIRECT LABOR SUBTOTAL		$3,179.80	
Supervision:			
d. direct supervison (NTE 15% of 1a)		$-	
e. safety (NTE 2% of lines 1a, b, & c)		$63.60	
			1. CRAFT LABOR COSTS $3,243.00
2. MATERIAL COSTS			
a. material costs		$617.31	
b. freight costs (itemize)		$-	
			2. MATERIAL COSTS $617.00
3. EQUIPMENT COSTS			
a. owned equipment (per spec approved source)		$-	
b. rental equipment (per invoices attached)		$-	
			3. EQUIPMENT COSTS $-
4. SMALL TOOLS			
a. small tools (NTE 5% of 1a & b)		$158.99	
			4. SMALL TOOLS $159.00
			SUBTOTAL 1 thru 4 $4,019.00
5. OVERHEAD & PROFIT			
a. NTE 15% portion of 1, 2, 3, & 4		$602.85	
			5. OVERHEAD & PROFIT $603.00
6. SUB-SUBCONTRACTORS			
a.			
b.		$-	
c.		$-	
d.		$-	
			6. SUB-SUBCONTRACTORS $-
7. OVERHEAD & PROFIT ON SUB-SUBCONTRACTORS			
a. NTE 8% of Line 6 up to $50,000 for each sub		$-	
b. NTE 6% of Line 6 in excess of $50,000 for each sub		$-	
			7. OVERHEAD & PROFIT ON SUB-SUBCONTRACTORS $-
8. INSURANCE			
a. payroll driven liability insurance	1.50 % of 1	$48.65	
b. volume driven liability insurance	1.50 % of 1-7	$69.33	8. INSURANCE $118.00
9. BOND			
a. bond	0.00 % of 1-8	$-	9. BOND $-
			TOTAL COST $4,740.00

COP Cost Breakdown

Project Name: Riverfront Park Looff Carrousel Facility
Project No.
Contractor: Peterson Electric, Inc.

COP No. CCD-041
Date: 5/8/2018
Contractor Ref. No. CCD-041

	Description	Quantity	Unit Type	Labor		Material		Equipment		Total Cost
				Unit $	Cost	Unit $	Cost	Unit $	Cost	
	Foreman Labor	52		$61.15	$3,179.80		$-		$-	$3,179.80
					$-		$-		$-	$-
					$-		$-		$-	$-
	Material (See Take Off)	1			$-	$617.31	$617.31		$-	$617.31
					$-		$-		$-	$-
					$-		$-		$-	$-
					$-		$-		$-	$-
					$-		$-		$-	$-
					$-		$-		$-	$-
					$-		$-		$-	$-
					$-		$-		$-	$-
					$-		$-		$-	$-
					$-		$-		$-	$-
					$-		$-		$-	$-
					$-		$-		$-	$-
					$-		$-		$-	$-
					$-		$-		$-	$-
					$-		$-		$-	$-
					$-		$-		$-	$-
					$-		$-		$-	$-
					$-		$-		$-	$-
					$-		$-		$-	$-
					$-		$-		$-	$-
					$-		$-		$-	$-
					$-		$-		$-	$-
					$-		$-		$-	$-
					$-		$-		$-	$-
	Labor Subtotal				**$3,179.80**					
	Foreman				$-		$-		$-	$-
	Lead Foreman				$-		$-		$-	$-
					$-		$-		$-	$-
Total Cost of Work		Form Revised 6/1/2004			**$3,179.80**		**$617.31**		**$-**	**$3,797.11**

COP Wage Rates

Project Name: Riverfront Park Looff Carrousel Facility

Project No: _____

Contractor: Peterson Electric, Inc.

Trade & Position		JOURNEYMAN	FOREMAN	GF	60.00%	65.00%	70.00%	75.00%	80.00%	85.00%	90.00%
Rate Schedule Date*											
Prevailing Wage (incl. Benefits)											
1. Hourly Wage Rate		$31.50	$34.64	$37.80	$19.90	$20.48	$22.05	$23.63	$25.20	$26.78	$28.35
2. Hourly Benefits		$17.92	$18.02	$18.13	$9.30	$9.35	$15.18	$15.59	$16.00	$16.39	$16.80
SUBTOTAL		**$49.42**	**$52.66**	**$55.93**	**$29.20**	**$29.83**	**$37.23**	**$39.22**	**$41.20**	**$43.17**	**$45.15**
	Rate										
3. FUI % of 1	0.80%	$0.25	$0.28	$0.30	$0.16	$0.16	$0.18	$0.19	$0.20	$0.21	$0.23
4. FICA % of 1	6.20%	$1.95	$2.15	$2.34	$1.23	$1.27	$1.37	$1.47	$1.56	$1.66	$1.76
5. MEDICARE % of 1	1.45%	$0.46	$0.50	$0.55	$0.29	$0.30	$0.32	$0.34	$0.37	$0.39	$0.41
6. SUI % of 1 (insert correct % to right)	3.41%	$1.07	$1.18	$1.29	$0.68	$0.70	$0.75	$0.81	$0.86	$0.91	$0.97
7. WC (insert $ amount per hour)		$2.09	$2.19	$2.26	$0.67	$1.83	$1.87	$1.92	$1.95	$1.98	$2.03
TOTAL (incl. payroll taxes)		**$55.25**	**$58.96**	**$62.67**	**$32.23**	**$34.09**	**$41.72**	**$43.94**	**$46.14**	**$48.33**	**$50.54**

NOTES: * Rate schedule date is the date of the Dept. of Labor & Industries Prevailing Wage Rate used or the Union Agreement.

a. for items 3 thru 5, the Federal rates do not vary by firm, and the percentages are already locked into this form.

b. for item 6, the actual rate is determined by the State Employment Security Dept. and varies by firm. It shall be verified by the contractor at the start of the project.

c. for item 7, the rate is based on L & I classification. The hourly dollar amount is specific to the firm/trade and shall be verified by the contractor at the start of the project.

d. definitions

1. items 1 & 2 are basic wages and benefits (see general conditions 7.02 B.7.a(1))
2. item 3, FUI is Federal Unemployment Tax Act (see general conditions 7.02 B.7.a(3))
3. item 4, FICA is Federal Insurance Compensation Act/Social Security (see general conditions 7.02B.7(3))
4. item 5, Medicare is FICA medical aid (see general conditions 7.02 B.7.a(3))
5. item 6, SUI is State Unemployment Compensation Act (see general conditions 7.02 B.7.a(3))
6. item 7, WC is industrial insurance/workers' compensation (see general conditions 7.02 B.7.a(2))

Job ID: JOB-0004
Project: B16-015 Riverfront Park Looff Carousel

CO: CO-0020: CCD-041 - Rewire Carousel

Takeoff

Vendor: BEST BUY + 54% **Labor Level:** LABOR 1 **8 May 2018 15:18:07**

Phase: MISCELLANEOUS

Item #	Qty	U/M	Q/M	Size	Description	Material Unit	Material Result
70338	250.00	FT	M	12/2	MC CABLE - ALUM JKT W/G	1.5400	385.00
160083	100.00	EA	M	1/2	ALUM 1-HOLE CONDUIT STRAP	1.1244	112.44
670032	30.00	EA	M	3/8	BX /MC 1-SCR SNGL STR-CONN	0.8829	26.49
7	4.00		M		LAMP HOLDER	8.2500	33.00
150486	5.00	EA	M		HANDY BOX BLANK COVER	0.5980	2.99
150095	2.00	EA	M		4"SQ BLANK CVR	0.3340	0.67
100137	175.00	EA	M	#22 to 8	WIRE-NUT MED -TAN	0.1292	22.61
670600	2.00	EA	M	CBL OD .125 > .250	STL CORD GRIP CONN 3/4" HUB	9.1196	18.24
70029	50.00	FT	M	12	THHN/THWN CU (SOL)	0.1403	7.02
140441	1.00	EA	M	20A	1P TOGGLE COMMERCIAL -GRADE	3.0954	3.10
150041	3.00	EA	M	2-1/8"D	4"SQ CMB-KO NO BRKT	0.9863	2.96
100152	1.00	EA	M	#12 SOL	8" PIGTAIL W/GRD SCREW	1.9025	1.90
150099	1.00	EA	M	1/2"D 7.3-CI	4"SQ 1-SW RAISED CVR	0.9106	0.91
					Phase Totals:		**617.31**
					Job Totals:		**617.31**

Peterson Electric
5622 N. MYRTLE ST
Spokane, WA 99217
Phone: (509) 489-1950
Web:

WALKER CONSTRUCTION

Looff Carrousel

Description: Carrousel Lights

CO req #

Dated

SECTION	DESCRIPTION	UNIT	QUANTITY	U/P LABOR	U/P MATERIAL	U/P SUB	TOTAL LABOR	TOTAL MATERIALS	Revised Submitted TOTAL SUBS	5/15/2018 TOTAL
							0.00	0.00	0.00	0.00
	Peterson Electric	ls	1	0	0	4740	0.00	0.00	4,740.00	4,740.00
							0.00	0.00	0.00	0.00
							0.00	0.00	0.00	0.00
							0.00	0.00	0.00	0.00
							0.00	0.00	0.00	0.00
							0.00	0.00	0.00	0.00
							0.00	0.00	0.00	0.00
							0.00	0.00	0.00	0.00
							0.00	0.00	0.00	0.00
							0.00	0.00	0.00	0.00
							0.00	0.00	0.00	0.00
						SUBTOTAL	0.00	0.00	4,740.00	4,740.00
						BUR/RATE	0.52	0.02	0.02	
						BURDEN	0.00	0.00	94.80	94.80
							0.00	0.00	4,834.80	4,834.80
								SUP/MED	0	0.00
										4,834.80
								SUB OH&P	8%	386.78
										0.00
								WALKER OH&P	15%	0.00
										0.00
								ADJUST		0.00
										5,221.58
								BOND	0.02	104.43
								TOTAL	ADD	$ 5,326

Accepted by Contractor:
Walker Construction, Inc.

By:

Date:

Recommended By:
NAC

By:

Date:

Approved by Owner:

By:

Date:

NAC
ARCHITECTURE

Construction Change Directive

To WALKER CONSTRUCTION

CCD No. 042
Project LOOFF CARROUSEL FACILITY
Date April 25, 2018
NAC No. 111 - 16004 - 10Fb
Owner Project No. 4312-16

In connection with your contract with City of Spokane dated January 27, 2017

In order to expedite the Work and avoid or minimize delays in the Work which may affect Contract Sum or Contract Time, you are hereby directed to make the following change(s). Submit final costs for Work involved and change in Contract Time (if any) for inclusion in a subsequent Change Order.

Title of CCD Power/Data at Fountain Vault

Description ☐ Continued on page 2 (Use Alt + Enter to create new lines.)

Add power receptacle and data conduit in the fountain vault as directed by Owner.

Attachments

The proposed basis of adjustment to the Contract Sum is: (lump sum, unit price, per Subparagraph 7.3.3 of AIA Document A201, or other)

Change Addition **in Contract Sum of** TBD ☐ **Fixed** ☐ **Maximum**

Change not applicable **in Contract Time of** 0 **calendar days** ☐ **Fixed** ☐ **Maximum**

The amount covers all direct and indirect costs related to the change including effects of the change on the remainder of the project. All other provisions of the contract remain in full effect. Attached are Cost Proposal Breakdown Sheets.

Signature by the Contractor indicates the Contractor's agreement with the proposed adjustments in the Contract Sum and Contract Time set forth in the Construction Change Directive. When signed by the Owner and Architect and received by the Contractor, this document becomes effective IMMEDIATELY as a Construction Change Directive (CCD), and the Contractor shall proceed with the change(s) described above.

Contractor's Acceptance **Date** 5 21 18
Architect's Recommendation **Date**
Owner's Acceptance **Date**

As indicated above the Owner accepts the foregoing proposal and authorizes performance of the changes specified. If the Contract Sum or Contract Time are marked as "Maximum," firm amounts will be required from the Contractor, with backup documentation prior to issuance of CO.

Final Cost Based on back-up Documentation:

Final cost of change 1272
Final time change **calendar days**

Contractor's Acceptance **Date**
Architect's Recommendation **Date**
Owner's Acceptance **Date**

A Change Order (CO) will follow which includes the Authorization amount. Billing cannot be honored for the CCD until issuance of the CO.
Distribution: After all signatures, (1) original to Owner, (1) copy to Architect, (1) copy to Contractor.

CCD-042.xlsm

>1203 West Riverside Avenue, Spokane, WA 99201-1107
509 838 8240 / nacarchitecture.com
Seattle / Spokane / Los Angeles

Construction Change Directive

CCD No. 042

Additional Description (Use Alt + Enter to create new lines.)

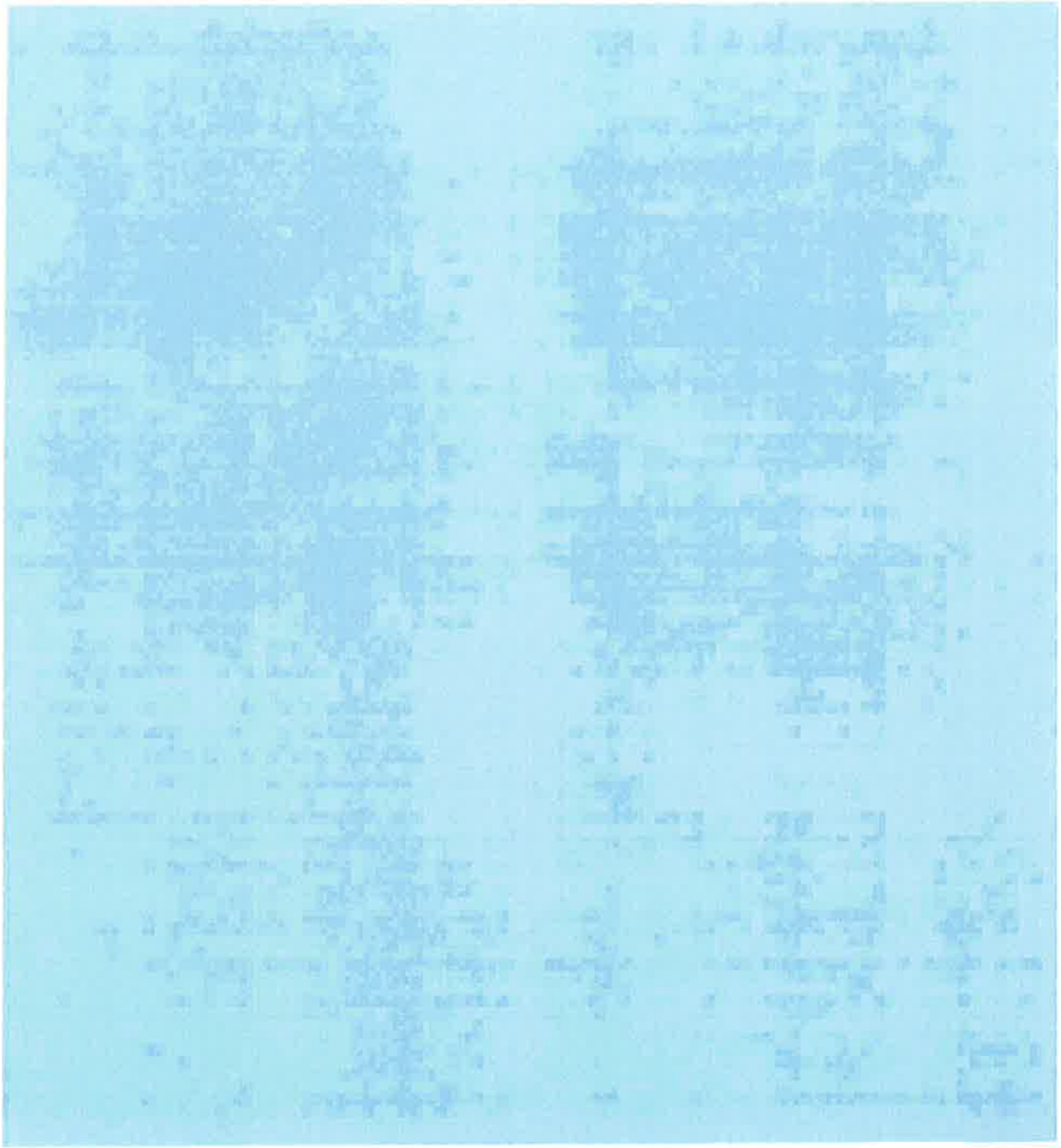

>1203 West Riverside Avenue, Spokane, WA 99201-1107
509 838 8240 / nacarchitecture.com
Seattle / Spokane / Los Angeles

WALKER CONSTRUCTION

Looff Carrousel

Description: Add data lines per Scott

CO req #

Dated

SECTION	DESCRIPTION	UNIT	QUANTITY	U/P LABOR	U/P MATERIAL	U/P SUB	TOTAL LABOR	TOTAL MATERIALS	Revised Submitted TOTAL SUBS	5/21/2018 TOTAL
							0.00	0.00	0.00	0.00
	Peterson Electric	ls	1	0	0	1132	0.00	0.00	1,132.00	1,132.00
							0.00	0.00	0.00	0.00
							0.00	0.00	0.00	0.00
							0.00	0.00	0.00	0.00
							0.00	0.00	0.00	0.00
							0.00	0.00	0.00	0.00
							0.00	0.00	0.00	0.00
							0.00	0.00	0.00	0.00
							0.00	0.00	0.00	0.00
							0.00	0.00	0.00	0.00
							0.00	0.00	0.00	0.00
						SUBTOTAL	0.00	0.00	1,132.00	1,132.00
						BUR/RATE	0.52	0.02	0.02	
						BURDEN	0.00	0.00	22.64	22.64
							0.00	0.00	1,154.64	1,154.64
								SUP/MED	0	0.00
										1,154.64
								SUB OH&P	8%	92.37
										0.00
								WALKER OH&P	15%	0.00
										0.00
								ADJUST		0.00
										1,247.01
								BOND	0.02	24.94
								TOTAL	ADD	$ 1,272

PETERSON Electric Inc.

Peterson Electric – Change Order Break Down

Project Name: Riverfront Park Looff Carrousel Facility

COP No. CCD-042

Project No.

Source Documents: CCD-042

Date: 5/18/2018

Contractor: Peterson Electric, Inc.

Contractor Ref. No. CCD-042

Description: CCD-042 Added Comm Path per Scott Stipes

1. CRAFT LABOR COSTS		Itemize all costs on attached COP Cost Breakdown form.	
Direct Labor Costs:			
a. crew (apprentices, journeymen, & laborers)			
b. foreman		$733.80	
c. lead foreman		$-	
DIRECT LABOR SUBTOTAL		$733.80	
Supervision:			
d. direct supervison (NTE 15% of 1a)		$-	
e. safety (NTE 2% of lines 1a, b, & c)		$14.68	
			1. CRAFT LABOR COSTS $748.00
2. MATERIAL COSTS			
a. material costs		$174.70	
b. freight costs (itemize)		$-	
			2. MATERIAL COSTS $175.00
3. EQUIPMENT COSTS			
a. owned equipment (per spec approved source)		$-	
b. rental equipment (per invoices attached)		$-	
			3. EQUIPMENT COSTS $-
4. SMALL TOOLS			
a. small tools (NTE 5% of 1a & b)		$36.69	
			4. SMALL TOOLS $37.00
			SUBTOTAL 1 thru 4 $960.00
5. OVERHEAD & PROFIT			
a. NTE 15% portion of 1, 2, 3, & 4		$144.00	
			5. OVERHEAD & PROFIT $144.00
6. SUB-SUBCONTRACTORS			
a.			
b.			
c.		$-	
d.		$-	
			6. SUB-SUBCONTRACTORS $-
7. OVERHEAD & PROFIT ON SUB-SUBCONTRACTORS			
a. NTE 8% of Line 6 up to $50,000 for each sub		$-	
b. NTE 6% of Line 6 in excess of $50,000 for each sub		$-	
			7. OVERHEAD & PROFIT ON SUB-SUBCONTRACTORS $-
8. INSURANCE			
a. payroll driven liability insurance	1.50 % of 1	$11.22	
b. volume driven liability insurance	1.50 % of 1-7	$16.56	8. INSURANCE $28.00
9. BOND			
a. bond	0.00 % of 1-8	$-	9. BOND $-
			TOTAL COST $1,132.00

COP Cost Breakdown

Project Name: Riverfront Park Looff Carrousel Facility
Project No.
Contractor: Peterson Electric, Inc.

COP No. CCD-042
Date: 5/18/2018
Contractor Ref. No. CCD-042

	Description	Quantity	Unit Type	Labor		Material		Equipment		Total Cost
				Unit $	Cost	Unit $	Cost	Unit $	Cost	
	Foreman Labor	12		$61.15	$733.80		$-		$-	$733.80
					$-		$-		$-	$-
					$-		$-		$-	$-
	Material (See Take Off)	1			$-	$174.70	$174.70		$-	$174.70
					$-		$-		$-	$-
					$-		$-		$-	$-
					$-		$-		$-	$-
					$-		$-		$-	$-
					$-		$-		$-	$-
					$-		$-		$-	$-
					$-		$-		$-	$-
					$-		$-		$-	$-
					$-		$-		$-	$-
					$-		$-		$-	$-
					$-		$-		$-	$-
					$-		$-		$-	$-
					$-		$-		$-	$-
					$-		$-		$-	$-
					$-		$-		$-	$-
					$-		$-		$-	$-
					$-		$-		$-	$-
					$-		$-		$-	$-
					$-		$-		$-	$-
					$-		$-		$-	$-
					$-		$-		$-	$-
					$-		$-		$-	$-
					$-		$-		$-	$-
					$-		$-		$-	$-
	Labor Subtotal				**$733.80**					
	Foreman				$-		$-		$-	$-
	Lead Foreman				$-		$-		$-	$-
					$-		$-		$-	$-
Total Cost of Work		Form Revised 6/1/2004			**$733.80**		**$174.70**		**$-**	**$908.50**

COP Wage Rates

Project Name: Riverfront Park Looff Carrousel Facility

Project No:

Contractor: Peterson Electric, Inc.

Trade & Position		JOURNEYMAN	FOREMAN	GF	60.00%	65.00%	70.00%	75.00%	80.00%	85.00%	90.00%
Rate Schedule Date*											
Prevailing Wage (incl. Benefits)											
1. Hourly Wage Rate		$31.50	$34.64	$37.80	$19.90	$20.48	$22.05	$23.63	$25.20	$26.78	$28.35
2. Hourly Benefits		$17.92	$18.02	$18.13	$9.30	$9.35	$15.18	$15.59	$16.00	$16.39	$16.80
SUBTOTAL		**$49.42**	**$52.66**	**$55.93**	**$29.20**	**$29.83**	**$37.23**	**$39.22**	**$41.20**	**$43.17**	**$45.15**
	Rate										
3. FUI % of 1	0.80%	$0.25	$0.28	$0.30	$0.16	$0.16	$0.18	$0.19	$0.20	$0.21	$0.23
4. FICA % of 1	6.20%	$1.95	$2.15	$2.34	$1.23	$1.27	$1.37	$1.47	$1.56	$1.66	$1.76
5. MEDICARE % of 1	1.45%	$0.46	$0.50	$0.55	$0.29	$0.30	$0.32	$0.34	$0.37	$0.39	$0.41
6. SUI % of 1 (insert correct % to right)	3.41%	$1.07	$1.18	$1.29	$0.68	$0.70	$0.75	$0.81	$0.86	$0.91	$0.97
7. WC (insert $ amount per hour)		$2.09	$2.19	$2.26	$0.67	$1.83	$1.87	$1.92	$1.95	$1.98	$2.03
TOTAL (incl. payroll taxes)		**$55.25**	**$58.96**	**$62.67**	**$32.23**	**$34.09**	**$41.72**	**$43.94**	**$46.14**	**$48.33**	**$50.54**

NOTES: * Rate schedule date is the date of the Dept. of Labor & Industries Prevailing Wage Rate used or the Union Agreement.

a. for items 3 thru 5, the Federal rates do not vary by firm, and the percentages are already locked into this form.

b. for item 6, the actual rate is determined by the State Employment Security Dept. and varies by firm. It shall be verified by the contractor at the start of the project.

c. for item 7, the rate is based on L & I classification. The hourly dollar amount is specific to the firm/trade and shall be verified by the contractor at the start of the project.

d. definitions

1. items 1 & 2 are basic wages and benefits (see general conditions 7.02 B.7.a(1))
2. item 3, FUI is Federal Unemployment Tax Act (see general conditions 7.02 B.7.a(3))
3. item 4, FICA is Federal Insurance Compensation Act/Social Security (see general conditions 7.02B.7(3))
4. item 5, Medicare is FICA medical aid (see general conditions 7.02 B.7.a(3))
5. item 6, SUI is State Unemployment Compensation Act (see general conditions 7.02 B.7.a(3))
6. item 7, WC is industrial insurance/workers' compensation (see general conditions 7.02 B.7.a(2))

Job ID: JOB-0004
Project: B16-015 Riverfront Park Looff Carousel

CO: CO-0021: CCD-042 - Comm At Fountain

Takeoff

Vendor: BEST BUY + 54% **Labor Level:** LABOR 1 **18 May 2018 11:25:40**

Phase: MISCELLANEOUS

Item #	Qty	U/M	Q/M	Size	Description	Material Unit	Material Result
10055	35.00	FT	M	1	EMT	1.7145	60.01
240200	6.00	EA	M	1	PLATED EMT STRUT CLAMPS	3.7579	22.55
30655	2.00	EA	M	1	EMT STEEL COMP CONNECTOR RT	1.8863	3.77
10054	35.00	FT	M	3/4	EMT	0.9901	34.65
240199	6.00	EA	M	3/4	PLATED EMT STRUT CLAMPS	3.3554	20.13
30654	2.00	EA	M	3/4	EMT STEEL COMP CONNECTOR RT	1.3465	2.69
150475	1.00	EA	M	1-7/8"D 13.0-CI	HANDY BOX NO/ BRKT 3/4"KO	2.0879	2.09
140012	1.00	EA	M	20A	DX RECEPT COMMERCIAL GRADE	2.7412	2.74
140776	1.00	EA	M	1-DUPLEX	1G STAINLESS STEEL PLATE	1.4784	1.48
100152	1.00	EA	M	#12 SOL	8" PIGTAIL W/GRD SCREW	1.9025	1.90
70029	150.00	FT	M	12	THHN/THWN CU (SOL)	0.1512	22.69
					Phase Totals:		**174.70**
					Job Totals:		**174.70**

Peterson Electric
5622 N. MYRTLE ST
Spokane, WA 99217
Phone: (509) 489-1950
Web:

NAC
ARCHITECTURE

Construction Change Directive

To WALKER CONSTRUCTION

CCD No. 043
Project LOOFF CARROUSEL FACILITY
Date April 25, 2018
NAC No. 111 - 16004 - 10Fb
Owner Project No. 4312-16

in connection with your contract with City of Spokane dated January 27, 2017

In order to expedite the Work and avoid or minimize delays in the Work which may affect Contract Sum or Contract Time, you are hereby directed to make the following change(s). Submit final costs for Work involved and change in Contract Time (if any) for inclusion in a subsequent Change Order.

Title of CCD Dimmer Control for Interior Lights

Description ☑ Continued on page 2 (Use Alt + Enter to create new lines.)

See next Page

Attachments

The proposed basis of adjustment to the Contract Sum is: (lump sum, unit price, per Subparagraph 7.3.3 of AIA Document A201, or other)

Change Addition **in Contract Sum of** TBD ☐ **Fixed** ☐ **Maximum**

Change not applicable **in Contract Time of** 0 **calendar days** ☐ **Fixed** ☐ **Maximum**

The amount covers all direct and indirect costs related to the change including effects of the change on the remainder of the project. All other provisions of the contract remain in full effect. Attached are Cost Proposal Breakdown Sheets.

Signature by the Contractor indicates the Contractor's agreement with the proposed adjustments in the Contract Sum and Contract Time set forth in the Construction Change Directive. When signed by the Owner and Architect and received by the Contractor, this document becomes effective IMMEDIATELY as a Construction Change Directive (CCD), and the Contractor shall proceed with the change(s) described above.

Contractor's Acceptance **Date** 5/2/18
Architect's Recommendation **Date**
Owner's Acceptance **Date**

As indicated above the Owner accepts the foregoing proposal and authorizes performance of the changes specified. If the Contract Sum or Contract Time are marked as "Maximum," firm amounts will be required from the Contractor, with backup documentation prior to issuance of CO.

Final Cost Based on back-up Documentation:

Final cost of change 2081
Final time change **calendar days**

Contractor's Acceptance **Date**
Architect's Recommendation **Date**
Owner's Acceptance **Date**

A Change Order (CO) will follow which includes the Authorization amount. Billing cannot be honored for the CCD until issuance of the CO.
Distribution: After all signatures, (1) original to Owner, (1) copy to Architect, (1) copy to Contractor.

CCD-043.xlsm

>1203 West Riverside Avenue, Spokane, WA 99201-1107
509 838 8240 / nacarchitecture.com
Seattle / Spokane / Los Angeles

Construction Change Directive

CCD No. 043

Additional Description (Use Alt + Enter to create new lines.)

Rewire the lighting to line up with daylight zones in the main entry, the north corridor entry, the north party room , and the gift shop. Use spare capacity in the ETC control system to account for any additional outputs that may be required.

Light level targets: 20fc in corridors, 30fc in the party room and 40fc in the gift shop.

>1203 West Riverside Avenue, Spokane, WA 99201-1107
509 838 8240 / nacarchitecture.com
Seattle / Spokane / Los Angeles

WALKER CONSTRUCTION

Looff Carrousel

Description: Add dimming, change configurations

CO req #									Revised	
Dated									Submitted	5/21/2018
SECTION	DESCRIPTION	UNIT	QUANTITY	U/P LABOR	U/P MATERIAL	U/P SUB	TOTAL LABOR	TOTAL MATERIALS	TOTAL SUBS	TOTAL
							0.00	0.00	0.00	0.00
	Peterson Electric	ls	1	0	0	1237	0.00	0.00	1,237.00	1,237.00
							0.00	0.00	0.00	0.00
	Walker						0.00	0.00	0.00	0.00
	Replace tiles	hr	8	35	20.00	0	280.00	160.00	0.00	440.00
							0.00	0.00	0.00	0.00
							0.00	0.00	0.00	0.00
							0.00	0.00	0.00	0.00
							0.00	0.00	0.00	0.00
							0.00	0.00	0.00	0.00
							0.00	0.00	0.00	0.00
						SUBTOTAL	280.00	160.00	1,237.00	1,677.00
						BUR/RATE	0.52	0.02	0.02	
						BURDEN	145.60	3.20	24.74	173.54
							425.60	163.20	1,261.74	1,850.54
								SUP/MED	0	0.00
										1,850.54
								SUB OH&P	8%	100.94
										0.00
								WALKER OH&P	15%	88.32
										0.00
								ADJUST		0.00
										2,039.80
								BOND	0.02	40.80
								TOTAL	ADD	$ 2,081

PETERSON Electric Inc.

Peterson Electric – Change Order Break Down

Project Name: Riverfront Park Looff Carrousel Facility

COP No. CCD-043

Project No.

Source Documents: CCD-043

Date: 5/18/2018

Contractor: Peterson Electric, Inc.

Contractor Ref. No. CCD-043

Description: CCD-043 Reconfigure dimming zones

1. CRAFT LABOR COSTS		Itemize all costs on attached COP Cost Breakdown form.	
Direct Labor Costs:			
a. crew (apprentices, journeymen, & laborers)			
b. foreman		$978.40	
c. lead foreman		$-	
DIRECT LABOR SUBTOTAL		$978.40	
Supervision:			
d. direct supervison (NTE 15% of 1a)		$-	
e. safety (NTE 2% of lines 1a, b, & c)		$19.57	
			1. CRAFT LABOR COSTS $998.00
2. MATERIAL COSTS			
a. material costs		$-	
b. freight costs (itemize)		$-	
			2. MATERIAL COSTS $-
3. EQUIPMENT COSTS			
a. owned equipment (per spec approved source)		$-	
b. rental equipment (per invoices attached)		$-	
			3. EQUIPMENT COSTS $-
4. SMALL TOOLS			
a. small tools (NTE 5% of 1a & b)		$48.92	
			4. SMALL TOOLS $49.00
			SUBTOTAL 1 thru 4 $1,047.00
5. OVERHEAD & PROFIT			
a. NTE 15% portion of 1, 2, 3, & 4		$157.05	
			5. OVERHEAD & PROFIT $157.00
6. SUB-SUBCONTRACTORS			
a.		$-	
b.		$-	
c.		$-	
d.		$-	
			6. SUB-SUBCONTRACTORS $-
7. OVERHEAD & PROFIT ON SUB-SUBCONTRACTORS			
a. NTE 8% of Line 6 up to $50,000 for each sub		$-	
b. NTE 6% of Line 6 in excess of $50,000 for each sub		$-	
			7. OVERHEAD & PROFIT ON SUB-SUBCONTRACTORS $-
8. INSURANCE			
a. payroll driven liability insurance	1.50 % of 1	$14.97	
b. volume driven liability insurance	1.50 % of 1-7	$18.06	8. INSURANCE $33.00
9. BOND			
a. bond	0.00 % of 1-8	$-	9. BOND $-
			TOTAL COST $1,237.00

COP Cost Breakdown

Project Name: Riverfront Park Looff Carrousel Facility
Project No.
Contractor: Peterson Electric, Inc.

COP No. CCD-043
Date: 5/18/2018
Contractor Ref. No. CCD-043

	Description	Quantity	Unit Type	Labor		Material		Equipment		Total Cost
				Unit $	Cost	Unit $	Cost	Unit $	Cost	
	Foreman Labor	16		$61.15	$978.40		$-		$-	$978.40
					$-		$-		$-	$-
					$-		$-		$-	$-
					$-		$-		$-	$-
					$-		$-		$-	$-
					$-		$-		$-	$-
					$-		$-		$-	$-
					$-		$-		$-	$-
					$-		$-		$-	$-
					$-		$-		$-	$-
					$-		$-		$-	$-
					$-		$-		$-	$-
					$-		$-		$-	$-
					$-		$-		$-	$-
					$-		$-		$-	$-
					$-		$-		$-	$-
					$-		$-		$-	$-
					$-		$-		$-	$-
					$-		$-		$-	$-
					$-		$-		$-	$-
					$-		$-		$-	$-
					$-		$-		$-	$-
					$-		$-		$-	$-
					$-		$-		$-	$-
					$-		$-		$-	$-
					$-		$-		$-	$-
					$-		$-		$-	$-
					$-		$-		$-	$-
					$-		$-		$-	$-
	Labor Subtotal				**$978.40**					
	Foreman				$-		$-		$-	$-
	Lead Foreman				$-		$-		$-	$-
					$-		$-		$-	$-
Total Cost of Work		Form Revised 6/1/2004			**$978.40**		**$-**		**$-**	**$978.40**

WALKER CONSTRUCTION

Looff Carrousel

Description: Add dimming, change configurations

CO req #

Dated

SECTION	DESCRIPTION	UNIT	QUANTITY	U/P LABOR	U/P MATERIAL	U/P SUB	TOTAL LABOR	TOTAL MATERIALS	Revised Submitted TOTAL SUBS	5/21/2018 TOTAL
							0.00	0.00	0.00	0.00
	Peterson Electric	ls	1	0	0	1237	0.00	0.00	1,237.00	1,237.00
							0.00	0.00	0.00	0.00
	Walker						0.00	0.00	0.00	0.00
	Replace tiles	hr	8	35	20.00	0	280.00	160.00	0.00	440.00
							0.00	0.00	0.00	0.00
							0.00	0.00	0.00	0.00
							0.00	0.00	0.00	0.00
							0.00	0.00	0.00	0.00
							0.00	0.00	0.00	0.00
							0.00	0.00	0.00	0.00
							0.00	0.00	0.00	0.00
						SUBTOTAL	280.00	160.00	1,237.00	1,677.00
						BUR/RATE	0.52	0.02	0.02	
						BURDEN	145.60	3.20	24.74	173.54
							425.60	163.20	1,261.74	1,850.54
								SUP/MED	0	0.00
										1,850.54
								SUB OH&P	8%	100.94
										0.00
								WALKER OH&P	15%	88.32
										0.00
								ADJUST		0.00
										2,039.80
								BOND	0.02	40.80
								TOTAL	ADD	$ 2,081

NAC
ARCHITECTURE

Construction Change Directive

To WALKER CONSTRUCTION

CCD No. 045
Project LOOFF CARROUSEL FACILITY
Date May 3, 2018
NAC No. 111 - 16004 - 10Fb
Owner Project No. 4312-16

in connection with your contract with City of Spokane dated January 27, 2017

In order to expedite the Work and avoid or minimize delays in the Work which may affect Contract Sum or Contract Time, you are hereby directed to make the following change(s). Submit final costs for Work involved and change in Contract Time (if any) for inclusion in a subsequent Change Order.

Title of CCD Cellular lines for Fire Alarm & Intrusion Detection

Description ☐ Continued on page 2 (Use Alt + Enter to create new lines.)

Provide cellular call out cards for fire alarm and intrusion detection in lieu of copper lines.

Attachments

The proposed basis of adjustment to the Contract Sum is: (lump sum, unit price, per Subparagraph 7.3.3 of AIA Document A201, or other)

Change Addition **in Contract Sum of** TBD ☐ **Fixed** ☐ **Maximum**

Change not applicable **in Contract Time of** 0 **calendar days** ☐ **Fixed** ☐ **Maximum**

The amount covers all direct and indirect costs related to the change including effects of the change on the remainder of the project. All other provisions of the contract remain in full effect. Attached are Cost Proposal Breakdown Sheets.

Signature by the Contractor indicates the Contractor's agreement with the proposed adjustments in the Contract Sum and Contract Time set forth in the Construction Change Directive. When signed by the Owner and Architect and received by the Contractor, this document becomes effective IMMEDIATELY as a Construction Change Directive (CCD), and the Contractor shall proceed with the change(s) described above.

Contractor's Acceptance **Date** 5/16/18
Architect's Recommendation **Date**
Owner's Acceptance **Date**

As indicated above the Owner accepts the foregoing proposal and authorizes performance of the changes specified. If the Contract Sum or Contract Time are marked as "Maximum," firm amounts will be required from the Contractor, with backup documentation prior to issuance of CO.

Final Cost Based on back-up Documentation:

Final cost of change 2938
Final time change **calendar days**

Contractor's Acceptance **Date**
Architect's Recommendation **Date**
Owner's Acceptance **Date**

A Change Order (CO) will follow which includes the Authorization amount. Billing cannot be honored for the CCD until issuance of the CO.
Distribution: After all signatures, (1) original to Owner, (1) copy to Architect, (1) copy to Contractor.

CCD-045.xlsm

>1203 West Riverside Avenue, Spokane, WA 99201-1107
509 838 8240 / nacarchitecture.com
Seattle / Spokane / Los Angeles

WALKER CONSTRUCTION

Looff Carrousel

Description: Add cellular call out

CO req #

Dated

SECTION	DESCRIPTION	UNIT	QUANTITY	U/P LABOR	U/P MATERIAL	U/P SUB	TOTAL LABOR	TOTAL MATERIALS	Revised Submitted TOTAL SUBS	5/16/2018 TOTAL
							0.00	0.00	0.00	0.00
	Peterson		1			2615	0.00	0.00	2,615.00	2,615.00
							0.00	0.00	0.00	0.00
							0.00	0.00	0.00	0.00
							0.00	0.00	0.00	0.00
							0.00	0.00	0.00	0.00
							0.00	0.00	0.00	0.00
							0.00	0.00	0.00	0.00
							0.00	0.00	0.00	0.00
							0.00	0.00	0.00	0.00
							0.00	0.00	0.00	0.00
							0.00	0.00	0.00	0.00
						SUBTOTAL	0.00	0.00	2,615.00	2,615.00
						BUR/RATE	0.52	0.02	0.02	
						BURDEN	0.00	0.00	52.30	52.30
							0.00	0.00	2,667.30	2,667.30
								SUP/MED	0	0.00
										2,667.30
								SUB OH&P	8%	213.38
										0.00
								WALKER OH&P	15%	0.00
										0.00
								ADJUST		0.00
										2,880.68
								BOND	0.02	57.61
								TOTAL	ADD	$ 2,938

PETERSON Electric Inc.

Peterson Electric – Change Order Break Down

Project Name: Riverfront Park Looff Carrousel Facility

COP No. CCD-045

Project No.

Source Documents: CCD-045

Date: 5/16/2018

Contractor: Peterson Electric, Inc.

Contractor Ref. No. CCD-045

Description: CCD-045 – Add cellular call out for fire alarm and intrution detection.

1. CRAFT LABOR COSTS		Itemize all costs on attached COP Cost Breakdown form.	
Direct Labor Costs:			
a. crew (apprentices, journeymen, & laborers)			
b. foreman			
c. lead foreman		$-	
DIRECT LABOR SUBTOTAL		$-	
Supervision:			
d. direct supervison (NTE 15% of 1a)		$-	
e. safety (NTE 2% of lines 1a, b, & c)		$-	
		1. CRAFT LABOR COSTS	$-
2. MATERIAL COSTS			
a. material costs			
b. freight costs (itemize)		$-	
		2. MATERIAL COSTS	$-
3. EQUIPMENT COSTS			
a. owned equipment (per spec approved source)		$-	
b. rental equipment (per invoices attached)		$-	
		3. EQUIPMENT COSTS	$-
4. SMALL TOOLS			
a. small tools (NTE 5% of 1a & b)		$-	
		4. SMALL TOOLS	$-
		SUBTOTAL 1 thru 4	$-
5. OVERHEAD & PROFIT			
a. NTE 15% portion of 1, 2, 3, & 4		$-	
		5. OVERHEAD & PROFIT	$-
6. SUB-SUBCONTRACTORS			
a. EVCO		$1,785.49	
b. FirePro		$600.00	
c.		$-	
d.		$-	
		6. SUB-SUBCONTRACTORS	$2,385.00
7. OVERHEAD & PROFIT ON SUB-SUBCONTRACTORS			
a. NTE 8% of Line 6 up to $50,000 for each sub		$190.84	
b. NTE 6% of Line 6 in excess of $50,000 for each sub		$-	
		7. OVERHEAD & PROFIT ON SUB-SUBCONTRACTORS	$191.00
8. INSURANCE			
a. payroll driven liability insurance	1.50 % of 1	$-	
b. volume driven liability insurance	1.50 % of 1-7	$38.64	
		8. INSURANCE	$39.00
9. BOND			
a. bond	0.00 % of 1-8	$-	
		9. BOND	$-
		TOTAL COST	$2,615.00

FirePROtection SPECIALISTS, LLC
WA-FIREPSL014CC, OR-158433, ID-SC 20003, MT-346 FPC

3624 E. Springfield, Spokane WA 99202
(509) 324-1844 FAX (509) 324-2089

6530 E. Okanogan, Suite 170, Kennewick, WA 99336
(509) 735-7313 FAX (509) 737-8058

LOOF CAROUSEL COMMUNICATOR
Attn: Brandon Peterson

May 14, 2018

Please see our proposal to furnish and install a cellular communicator. Prices are good for thirty (30) days.

SCOPE: Furnish fire alarm system material for installation by others. Provide system programming, testing, and inspection.

FIRE ALARM BILL OF MATERIAL

QTY.	ITEM
1	CELLULAR COMMUNICATOR: HONEYWELL IPGSM-4G

BID TOTAL: $600.00

INCLUSIONS:

1. Engineered shop drawings
2. Material pre-paid freight and handling to job site
3. Warranty on material provided
4. Full submittal package to Authority Having Jurisdiction
5. Fire Alarm System permit
6. Testing/certification with local fire official
7. Electronic submittals
8. Electronic O&M's
9. Owner training

EXCLUSIONS:

1. Washington State Sales Tax
2. 120-volt power to fire alarm panel, power supply and communicator
3. Conduit
4. Device boxes
5. System cable installation
6. Device trim/installation
7. System cable

PROPOSAL SCHEDULE OF VALUES:

SUBMITTALS/PERMIT – 20%	MATERIAL ON SITE – 80%
FINAL INSPECTION – 90%	O&M'S/RECORD DRAWINGS – 100%

Bryan Gray
Sales Engineer
NICET III FIRE ALARM SYSTEMS

Evco Sound & Electronics, Inc.

QUOTATION: 5828
Evco Sound & Electronics Inc.
3511 E Trent Ave
Spokane, WA 99202

BILL TO:		PROJECT:			
COMPANY:	Peterson Electric Inc	COMPANY:	Peterson Electric Inc	DATE:	May 3, 2018
ADDRESS:	5622 N Myrtle St	ADDRESS:	5622 N Myrtle St	SALES REP:	TRICHARDSON
				PHONE:	
	Spokane, WA 99217		Spokane, WA 99217	EMAIL:	
CONTACT:		CONTACT:			
PHONE:	(509)489-1950	PHONE:	(509)489-1950		

TITLE:

CCD 045: Add Cellular Card and Antenna

SCOPE OF WORK:

EVCO to add cellular dialer and exterior antenna to DMP intrusion panel for reporting burglary signals (NO FIRE) via cellular to owners central station (Non-EVCO). DMP/Securecom cellular service will require a monthly re-occurring charge to be processed outside of this contract.

PART NUMBER	PART DESCRIPTION	QTY	UNIT PRICE	TOTAL PRICE
263C/381-2	CDMA CELLULAR COMMUNICATOR FOR XT SERIES W/381-2	1.00	$236.88	$236.88
MISC-EXPENSE	One time Cellular activation charge	1.00	$28.00	$28.00
INSTALLATION	Installation Services	6.00	$72.50	$435.00
PROGRAMMING/IT	Programming/IT Services	2.00	$100.00	$200.00
STAGING/FABRICATION	Staging/Fabrication Services	1.00	$72.50	$72.50
ENGINEERING	Engineering Services	1.00	$91.25	$91.25
SHIP-HANDLE	Shipping and Handling	1.00	$37.10	$37.10
TRAVEL	Travel Time	1.00	$54.00	$54.00
MILEAGE	Distance Traveled	10.00	$0.00	$0.00
PERMITS	Electrical Permits and AHJ's	1.00	$125.00	$125.00
387-50	SMA TO N CABLE, 50FT, LMR195	1.00	$324.32	$324.32
387-1	3DB FIBERGLASS ANTENNA W/BRACKET	1.00	$181.44	$181.44

SUBTOTAL:	$1,785.49
TAX:	$0.00
TOTAL:	$1,785.49

IF YOU WISH TO ACCEPT THIS PROPOSAL AND RELATED STATEMENT OF WORK, PLEASE SIGN AND RETURN

Evco Sound & Electronics, Inc.

QUOTATION: 5828
Evco Sound & Electronics Inc.
3511 E Trent Ave
Spokane, WA 99202

BUYER:_____ (Print Name)
BUYER SIGNATURE:_____
DATE:_____

NAC
ARCHITECTURE

Construction Change Directive

To	WALKER CONSTRUCTION
CCD No.	049
Project	LOOFF CARROUSEL FACILITY
Date	May 16, 2018
NAC No.	111 - 16004 - 10Fb
Owner Project No.	4312-16

in connection with your contract with City of Spokane dated January 27, 2017

In order to expedite the Work and avoid or minimize delays in the Work which may affect Contract Sum or Contract Time, you are hereby directed to make the following change(s). Submit final costs for Work involved and change in Contract Time (if any) for inclusion in a subsequent Change Order.

Title of CCD Install Light Poles on Spokane Falls Blvd

Description ☑ Continued on page 2 (Use Alt + Enter to create new lines.)

Install light poles at Spokane Falls Blvd near the Red Wagon.

Attachments

The proposed basis of adjustment to the Contract Sum is: (lump sum, unit price, per Subparagraph 7.3.3 of AIA Document A201, or other)

Change Addition **in Contract Sum of** TBD ☐ **Fixed** ☐ **Maximum**

Change not applicable **in Contract Time of** 0 **calendar days** ☐ **Fixed** ☐ **Maximum**

The amount covers all direct and indirect costs related to the change including effects of the change on the remainder of the project. All other provisions of the contract remain in full effect. Attached are Cost Proposal Breakdown Sheets.

Signature by the Contractor indicates the Contractor's agreement with the proposed adjustments in the Contract Sum and Contract Time set forth in the Construction Change Directive. When signed by the Owner and Architect and received by the Contractor, this document becomes effective IMMEDIATELY as a Construction Change Directive (CCD), and the Contractor shall proceed with the change(s) described above.

Contractor's Acceptance		**Date** 5 21 18
Architect's Recommendation		**Date**
Owner's Acceptance		**Date**

As indicated above the Owner accepts the foregoing proposal and authorizes performance of the changes specified. If the Contract Sum or Contract Time are marked as "Maximum," firm amounts will be required from the Contractor, with backup documentation prior to issuance of CO.

Final Cost Based on back-up Documentation:

Final cost of change 7072

Final time change **calendar days**

Contractor's Acceptance		**Date**
Architect's Recommendation		**Date**
Owner's Acceptance		**Date**

A Change Order (CO) will follow which includes the Authorization amount. Billing cannot be honored for the CCD until issuance of the CO.

Distribution: After all signatures, (1) original to Owner, (1) copy to Architect, (1) copy to Contractor.

CCD-049.xlsm

>1203 West Riverside Avenue, Spokane, WA 99201-1107
509 838 8240 / nacarchitecture.com
Seattle / Spokane / Los Angeles

Construction Change Directive

CCD No. 049

Additional Description (Use Alt + Enter to create new lines.)

Remove rock as required. Provide 2" concrete cap at shallow trench locations. Repair / patch asphalt to match existing adjacent grades.

>1203 West Riverside Avenue, Spokane, WA 99201-1107
509 838 8240 / nacarchitecture.com
Seattle / Spokane / Los Angeles

WALKER CONSTRUCTION

Looff Carrousel

Description: Rock ex at SFB

CO req #

Dated

SECTION	DESCRIPTION	UNIT	QUANTITY	U/P LABOR	U/P MATERIAL	U/P SUB	TOTAL LABOR	TOTAL MATERIALS	TOTAL SUBS	Revised Submitted 5/21/2018 TOTAL
							0.00	0.00	0.00	0.00
	Peterson	ls	1	0	0	5365	0.00	0.00	5,365.00	5,365.00
							0.00	0.00	0.00	0.00
	Additional sawcut for asphalt	ls	1	250	500.00	0	250.00	500.00	0.00	750.00
							0.00	0.00	0.00	0.00
							0.00	0.00	0.00	0.00
							0.00	0.00	0.00	0.00
							0.00	0.00	0.00	0.00
							0.00	0.00	0.00	0.00
							0.00	0.00	0.00	0.00
							0.00	0.00	0.00	0.00
						SUBTOTAL	250.00	500.00	5,365.00	6,115.00
						BUR/RATE	0.52	0.02	0.02	
						BURDEN	130.00	10.00	107.30	247.30
							380.00	510.00	5,472.30	6,362.30
								SUP/MED	0	0.00
										6,362.30
								SUB OH&P	8%	437.78
										0.00
								WALKER OH&P	15%	133.50
										0.00
								ADJUST		0.00
										6,933.58
								BOND	0.02	138.67
								TOTAL	ADD	$ 7,072

PETERSON Electric Inc.

Peterson Electric – Change Order Break Down

Project Name: Riverfront Park Looff Carrousel Facility | COP No. CCD-049

Project No. | Source Documents: CCD-049 | Date: 5/18/2018

Contractor: Peterson Electric, Inc. | Contractor Ref. No. CCD-049

Description: CCD-049 Excavating/Chipping/Drilling Hard rock at red wagon. Capping shallow conduits with concrete.

1. CRAFT LABOR COSTS			Itemize all costs on attached COP Cost Breakdown form.	
Direct Labor Costs:				
a. crew (apprentices, journeymen, & laborers)				
b. foreman		$3,118.65		
c. lead foreman		$-		
DIRECT LABOR SUBTOTAL		$3,118.65		
Supervision:				
d. direct supervison (NTE 15% of 1a)		$-		
e. safety (NTE 2% of lines 1a, b, & c)		$62.37		
			1. CRAFT LABOR COSTS	$3,181.00
2. MATERIAL COSTS				
a. material costs		$318.00		
b. freight costs (itemize)		$-		
			2. MATERIAL COSTS	$318.00
3. EQUIPMENT COSTS				
a. owned equipment (per spec approved source)		$-		
b. rental equipment (per invoices attached)		$900.76		
			3. EQUIPMENT COSTS	$901.00
4. SMALL TOOLS				
a. small tools (NTE 5% of 1a & b)		$155.93		
			4. SMALL TOOLS	$156.00
			SUBTOTAL 1 thru 4	$4,556.00
5. OVERHEAD & PROFIT				
a. NTE 15% portion of 1, 2, 3, & 4		$683.40		
			5. OVERHEAD & PROFIT	$683.00
6. SUB-SUBCONTRACTORS				
a.		$-		
b.		$-		
c.		$-		
d.		$-		
			6. SUB-SUBCONTRACTORS	$-
7. OVERHEAD & PROFIT ON SUB-SUBCONTRACTORS				
a. NTE 8% of Line 6 up to $50,000 for each sub		$-		
b. NTE 6% of Line 6 in excess of $50,000 for each sub		$-		
			7. OVERHEAD & PROFIT ON SUB-SUBCONTRACTORS	$-
8. INSURANCE				
a. payroll driven liability insurance	1.50 % of 1	$47.72		
b. volume driven liability insurance	1.50 % of 1-7	$78.59	8. INSURANCE	$126.00
9. BOND				
a. bond	0.00 % of 1-8	$-	9. BOND	$-
			TOTAL COST	$5,365.00

COP Cost Breakdown

Project Name: Riverfront Park Looff Carrousel Facility
Project No.
Contractor: Peterson Electric, Inc.

COP No. CCD-049
Date: 5/18/2018
Contractor Ref. No. CCD-049

	Description	Quantity	Unit Type	Labor		Material		Equipment		Total Cost
				Unit $	Cost	Unit $	Cost	Unit $	Cost	
	Foreman Labor	51		$61.15	$3,118.65		$-		$-	$3,118.65
					$-		$-		$-	$-
					$-		$-		$-	$-
					$-		$-		$-	$-
					$-		$-		$-	$-
	Concrete to cap shallow pipes	3	YD		$-	$106.00	$318.00		$-	$318.00
					$-		$-		$-	$-
					$-		$-		$-	$-
					$-		$-		$-	$-
					$-		$-		$-	$-
					$-		$-		$-	$-
					$-		$-		$-	$-
					$-		$-		$-	$-
					$-		$-		$-	$-
					$-		$-		$-	$-
					$-		$-		$-	$-
					$-		$-		$-	$-
					$-		$-		$-	$-
					$-		$-		$-	$-
					$-		$-		$-	$-
					$-		$-		$-	$-
					$-		$-		$-	$-
					$-		$-		$-	$-
					$-		$-		$-	$-
					$-		$-		$-	$-
					$-		$-		$-	$-
					$-		$-		$-	$-
	Labor Subtotal				**$3,118.65**					
	Foreman				$-		$-		$-	$-
	Lead Foreman				$-		$-		$-	$-
					$-		$-		$-	$-
Total Cost of Work		Form Revised 6/1/2004			**$3,118.65**		**$318.00**		**$-**	**$3,436.65**

United Rentals

BRANCH 280
204 SOUTH FANCHER RD
SPOKANE VALLEY WA 99212
509-532-1235
509-534-3471 FAX

RENTAL RETURN INVOICE

157243901-001

Job Site Address

RFP CAROUSEL
SPOKANE FALLS BLVD
x:.@.
SPOKANE WA 99201
Office: 509-489-1950 Cell: 509-280-7554

Customer #	: 711098
Invoice Date	: 05/15/18
Rental Out	: 05/14/18 11:47 AM
Rental In	: 05/15/18 04:09 PM
UR Job Loc	: SPOKANE FALLS BLVD,
UR Job #	: 34
Customer Job ID:	
P.O. #	: 1422
Ordered By	: JIM
Written By	: BEN ROEDL
Salesperson	: W ERIK PYATT

PETERSON ELECTRIC INC
5622 N MYRTLE
SPOKANE WA 99217

Invoice Amount: $826.78

Terms: Due Upon Receipt
Payment options: Contact our credit office 212-333-6600 Ext. 84737
REMIT TO: UNITED RENTALS (NORTH AMERICA),INC.
FILE 51122
LOS ANGELES CA 90074-1122

RENTAL ITEMS:

Qty	Equipment	Description	Minimum	Day	Week	4 Week	Amount
1	10638278	COMPRESSOR 175-195 CFM TIER 4 Make: ATLASCOPCO Model: XAS185KD7 FT4 Serial: HOP055093 Meter out: 76.00 Meter in: 86.00		160.00	525.00	1100.00	320.00
1	10563627	BREAKER PAVEMENT AIR 60# Make: APT Model: M160 Serial: 420455	26.00	52.00	190.00	408.00	104.00
1	110/2400	AIR HOSE 3/4" X 50'		10.00	25.00	50.00	20.00
1	10623857	BREAKER PAVEMENT AIR 90# Make: APT Model: M190 Serial: 326532	33.50	67.00	204.00	453.00	134.00
1	110/2400	AIR HOSE 3/4" X 50'					N/C

Rental Subtotal: 578.00

SALES/MISCELLANEOUS ITEMS:

Qty	Item		Price	Unit of Measure	Extended Amt.
5	RESHARPENING CHARGE, MOIL POINT	[RSP/MCI]	8.500	EACH	42.50
4	RESHARPENING CHARGE, CHISEL	[RSC/MCI]	8.500	EACH	34.00
1	ENVIRONMENTAL SERVICE CHARGE	[ENV/MCI]	4.160	EACH	4.16
13.5	DYED DIESEL	[DYEDDSL/MCI]	7.500	EACH	101.25

Sales/Misc Subtotal: 181.91

Agreement Subtotal: 658.66
Fuel: 101.25
Tax: 66.87
Total: 826.78

COMMENTS/NOTES:

CONTACT: DALE PIPPINGER
CELL#: 509-280-7554

THIS INVOICE IS ISSUED SUBJECT TO THE TERMS AND CONDITIONS OF THE RENTAL AGREEMENT, WHICH ARE INCORPORATED HEREIN BY REFERENCE. A COPY OF THE RENTAL AGREEMENT IS AVAILABLE UPON REQUEST.

You Can Now Access Invoice History and Update Purchase Orders Online.
To Sign Up, contact URControlSupport@ur.com

United Rentals

RENTAL RETURN INVOICE

157271789-001

BRANCH 280
204 SOUTH FANCHER RD
SPOKANE VALLEY WA 99212
509-532-1235
509-534-3471 FAX

Job Site Address

RFP CAROUSEL
SPOKANE FALLS BLVD
x:.@.
SPOKANE WA 99201
Office: 509-489-1950 **Cell:** 509-280-7554

PETERSON ELECTRIC INC
5622 N MYRTLE
SPOKANE WA 99217

Customer #	: 711098
Invoice Date	: 05/15/18
Rental Out	: 05/15/18 07:19 AM
Rental In	: 05/15/18 04:10 PM
UR Job Loc	: SPOKANE FALLS BLVD,
UR Job #	: 34
Customer Job ID	:
P.O. #	: 1422
Ordered By	: DALE
Written By	: BEN ROEDL
Salesperson	: W ERIK PYATT

Invoice Amount: $73.98

Terms: Due Upon Receipt
Payment options: Contact our credit office 212-333-6600 Ext. 84737
REMIT TO: UNITED RENTALS (NORTH AMERICA),INC.
FILE 51122
LOS ANGELES CA 90074-1122

RENTAL ITEMS:

Qty	Equipment	Description	Minimum	Day	Week	4 Week	Amount
1	10619897	ROCK DRILL AIR 60-69 LB Make: TEXAS-PNEU Model: TX60RD-8 Serial: 00703	27.00	54.00	187.00	453.00	54.00
1	110/5360	DRILL STEEL 7/8" X 2' INTEGRAL H	14.00	14.00	42.00	85.00	14.00

Rental Subtotal:	68.00
Agreement Subtotal:	68.00
Tax:	5.98
Total:	73.98

COMMENTS/NOTES:

CONTACT: DALE PIPPINGER
CELL#: 509-280-7554

THIS INVOICE IS ISSUED SUBJECT TO THE TERMS AND CONDITIONS OF THE RENTAL AGREEMENT, WHICH ARE INCORPORATED HEREIN BY REFERENCE.
A COPY OF THE RENTAL AGREEMENT IS AVAILABLE UPON REQUEST.

You Can Now Access Invoice History and Update Purchase Orders Online
To Sign Up, contact URControlSupport@ur.com

Return to Page 3

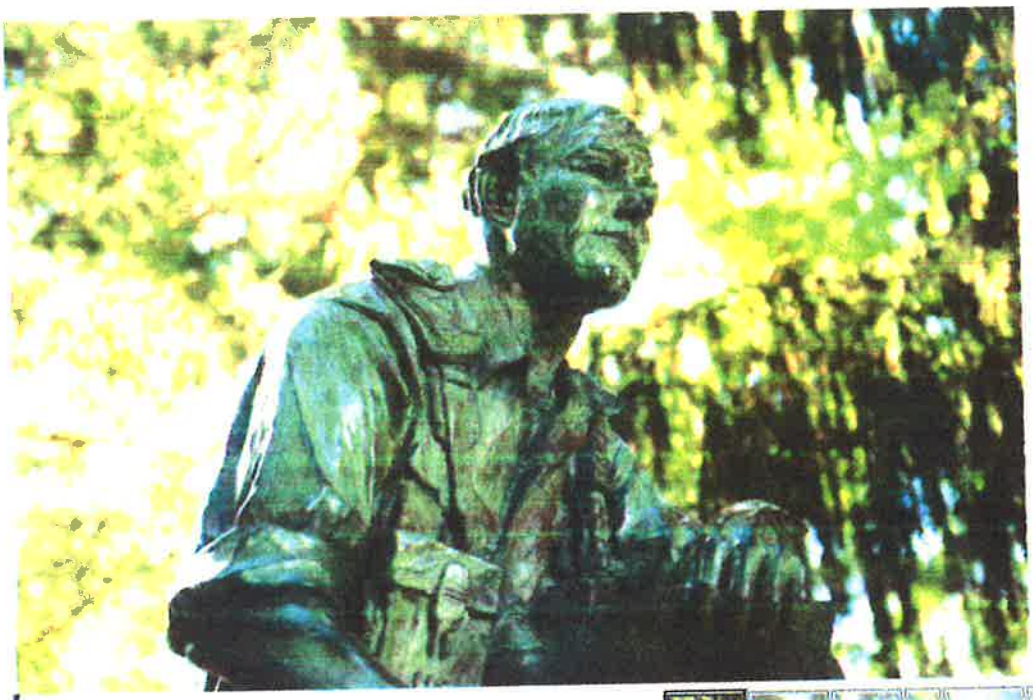

The Vietnam Memorial, which reads "Inland Northwest Vietnam Veterans Memorial/ Dedicated November 10, 1985 to those who served and to those who gave their lives and are now in the hands of God" as photographed on May 24, 2018. The memorial is located in Riverfront Park. *(Libby Kamrowski / The Spokesman-Review)*

Vietnam Veterans Memorial

By Lacey Sipos

From 1955 to 1975, more than 3 million Americans fought in Vietnam. Almost 60,000 U.S. soldiers were killed, and more than 150,000 wounded in combat. Almost every community across the United States, from large cities to small farm towns, felt the toll of the Vietnam War. Spokane was no exception. The hinterlands lost 300 beloved lives. The Vietnam Veterans Memorial in front of you was erected to honor those 300 soldiers who called the Inland Northwest home. According to an article in the Spokane Chronicle in 1983, the

sculpture was originally envisioned to hold twice the amount of names then you see before you. The names of these soldiers would have come from Eastern Washington, North Idaho, Western Montana and Southern British Columbia.

This bronze soldier gazing across the park weights 400 pounds and sits atop a 3,400 pound granite base. According to the artist, the letter in the soldier's hand is meant for onlookers to "fill in the blank sheet." To raise funds for the art piece, collection canisters were placed in local business like 7-Eleven stores and Pizza Huts. It was a three-year community effort to raise the $95,000 commission. This hefty amount included labor and material for the memorial. It was not until a competitive bid for the Memorial was offered from the neighboring city of Portland did Spokane raise the needed amount to erect the sculpture. The victorious Spokane dedicated the piece on November 11, 1985.

The artist of the Vietnam Veterans Memorial is Deborah Copenhaver-Fellows. Copenhaver-Fellows is renowned for her work with metals, specifically for her technique of manipulating bronze and silver. Her sculptures can be admired all over the United States including the Capitol Building, the Bing Crosby statue at Gonzaga University, and the Korean War Veterans Memorial in Olympia.

Cite this Page:

Lacey Sipos, "Vietnam Veterans Memorial," *Spokane Historical*, accessed June 7, 2018, http://spokanehistorical.org/items/show/193.

Subjects:

VIETNAM VETERANS MEMORIAL

Related Sources:

Hal McGlathery

Northeast Youth Center
Board Member

Monarch Arts
Board Member

Hoopfest Operating Comm.
Marshal Elite Division

(509) 954-3562
6126 S. Martin Street
Spokane, WA 99223
meetmcgraw@aol.com

We use cookies to give you a better experience. By continuing to use alamy.com you accept our use of cookies.

alamy

Inland Northwest Vietnam Veterans Memorial, Riverfront Park, Spokane, Washington State, USA

Contributor: PCS Venture, Super

Image ID: D6WEX2 | File size

Releases* : Model - no | Pro

Inland Northwest Vietnam Veterans Memorial, Riverfront Park, Spokane, Washington State, USA

If you want to use this image commercially and we've indicated* that Alamy doesn't have a release, you might need additional permission from the model, artist, owner, estate, trademark or brand. More information.

Search stock photos by tags

art bronze color image day history
human representation inland
show all
inland northwest vietnam veterans

memorial
male likeness memorial north america northwest outdoors past photography riverfront park sculpture soldier spokane statue travel destinations usa vertical veteran veterans vietnam washington state

More information

Photographer: George Ostertag

© 2018 Alamy Ltd. All rights reserved.

Broadmoor Galleries

Deborah Copenhaver-Fellows

b.1948

Deborah Copenhaver was born and raised on a cattle and Quarter Horse ranch in northern Idaho.
Her father, a World Champion Bronc Rider, supported the family with his winnings. She and her younger brother Jeff grew up on the ranch often alone with their mother. Work on the ranch was shared by all, and a life long passion for horses grew from those responsibilities. It was at this time that Deborah sold her first drawings of horses.
Competition was a way of life for the Copenhaver family. Deborah won barrel races before she was a teenager and was a member of the Girls Rodeo Association.
She had her first race horse at twelve. Her brother Jeff roped calves and won calf roping competitions at an equally young age.
Deborah spent her first year of College at Washington State University where she earned a full scholarship. That same year Deborah won the competition to become Miss Rodeo Washington and was Runner Up Miss Rodeo America.
Her second year of college she transferred to Fort Wright College of the Holy Names in Spokane Washington. Here she met a nun, Sister Paula Mary Turnbull, who taught sculpture. Deborah received a Bachelor of Fine Arts degree with a Fine Art major following study in Italy where her passion for sculpture came alive and continues today.
At 19 she sculpted her first commissioned bronze for the city of Spokane, James Glover.
She successfully owned and operated her own business Classic Interiors; an experience that honed her business skills.
Despite her success in the business world, the horses called... She and her brother loaded their horses and left Washington to compete in the winter rodeo circuit .By the second go round of Houston and no winnings, Deborah loaded both horses and headed for Phoenix with just enough money to get to a friend's ranch in Chandler.

Prescott to get a job as a head wran; t year she cast her first bronze... and started her art career ....Jeff wor uston and went on to win the World's Championship.

Broadmoor Galleries

Within four years Deborah was commissioned by Gonzaga University to sculpt a monument of Bing Crosby. The project took her to Queen's New York, to Roman Bronze Works, the foundry that cast bronzes by Charlie Russell and Frederick Remington's bronzes. This was the first of many monuments that she would create.

It was during this period Deborah married and had her only child, Fabienne.

"My greatest life's accomplishment," according to Deborah.

In the post Vietnam era Deborah won competitions to create veteran memorials including the Inland Northwest Vietnam Veterans Memorial ,Montana State Vietnam Veterans Memorial and the Washington State Korean War Memorial.

She also received commissions to do monuments of Henry Kaiser, James Irvine, Frank Erwin of the University of Texas and created a monument for The Boy Scouts Of America.

In the last decade, Deborah's life and career have reached new heights as she has returned to her original inspiration source, the American West. Living now in southern Arizona with her husband Fred Fellows, Deborah is devoted to creating fresh, original and accomplished sculptures which express her heartfelt feelings for the Western way of life. Surrounded by splendid Southwestern scenery and a string of good horses, she is assured an ample source of inspiration for a lifetime.

THE SPOKESMAN-REVIEW

NEWS > MILITARY

In scattered memorials, Spokane remembers its nation's wars – but what do the monuments mean?

Mon., May 28, 2018

The Vietnam Memorial, which reads "Inland Northwest Vietnam Veterans Memorial/ Dedicated November 10, 1985 to those who served and to those who gave their lives and are now in the hands of God" as photographed on May 24, 2018. The memorial is located in Riverfront Park. (Libby Kamrowski / The Spokesman-Review)

By Nicholas Deshais
ickd@spokesman.com
(509) 459-5440

At sunrise, on every Memorial Day for the past 20 years, Wes Anderson is alone in Spokane's Riverfront Park, scrubbing clean the Vietnam Veterans Memorial.

"I get there at 5 a.m.," said Anderson, post chaplain of the Spokane chapter of the Veterans of Foreign Wars. "Just by myself and nobody else."

The bronze statue of a forlorn looking soldier, a letter in his hand, is tucked away on a wooded rise in the park. The monument, dedicated in 1985, is etched with the names of those who served in the war and hailed from the Inland Northwest.

Anderson was in Vietnam as a Marine from 1966 to 1968, and the memorial represents the recognition and respect that he said was absent when he came home from war – a sentiment shared by many veterans of that war.

"We're a tightknit group. We support each other because when we came back we had no support," he said. "When I pass on, all that's going to be left of me is a stone plaque out at the veterans cemetery. And that's it. But that monument is for everyone that served."

Memorial Day is a day to remember the people who died while serving in the military. Monuments like the one in Riverfront Park are just one way to remember the dead, and Spokane, like much of the rest of the country, has many such memorials.

As it's said, those who died while serving made the ultimate sacrifice. But not all wars are remembered equally, with some notably lacking in monumental form. Where is our plaque for the Korean War? And where do we go to reflect on World War II?

G. Kurt Piehler, a historian at Florida State University and director of the Institute on World War II and the Human Experience, has studied war monuments in America. The more controversial the war is, he said, the more

Return to Page 3

riverfront SPOKANE

Riverfront Park
2018-19
Programming Overview

Rides Program Discussion History

- Rides cost recovery discussed since Sept 2012. Shown loss since 2009
- Financial performance of rides calculated with consistently with indirect cost and depreciation per City accounting practice.
- 2013-2014 – RFP Advisory Committee considered financial performance and feedback from independent Citizen Engagement Study of 400 people
- 2014 – Two public open houses held to present committee recommendations and take public comment
- 2014 – Master plan called for removal of rides
- 2016 – Park Board member Vision Questionnaire affirms p

Riverfront Park Programming Mission

Programming Department Overview

Developed to produce, enhance, and increase park activities that create a memorable, educational and transformative experience for park users.

Mission

Fully embody Riverfront Park's place as a signature park incorporating both beautiful landscapes, and quality, exciting public programming. We offer a dynamic calendar of events with a variety of programming that reflects a diverse range of community interests.

Programming Goals

Supports the 2014 Master Plan Vision

1. Provide something for everyone in every season – *balanced*
2. Accessible & Affordable
3. Fiscally Responsible
4. Increase # of events from 45 to 120-150

Programming Goals

Provide something for everyone in every season

Programming Categories

- Arts & Culture
- Healthy Living
- Entertainment
- Children & Families
- Signature Events

Target Markets

- Children & Families
- Teens
- Millennials
- Adults
- Varied/All Ages

2018 Programming

Programming Category: Entertainment
Target Market: Millennials / Adults

4.1 (pg. 26) Enhanced uses to appeal to the millennial generation and weekday downtown professionals

Return to Page 3

2018 Programming

Programming Category: Entertainment
Target Market: Teens

2018 Programming

Programming Category: Arts & Culture
Target Market: Varied

Piano in the Park

2018 Programming

Programming Category: Arts & Culture
Target Market: Children

Sunday FunDay

Art in the Park

2018 Programming

Programming Category: Entertainment
Target Market: Millennial / Adult

Riverfront .5K

The running event for the rest of us.

Programming Balance

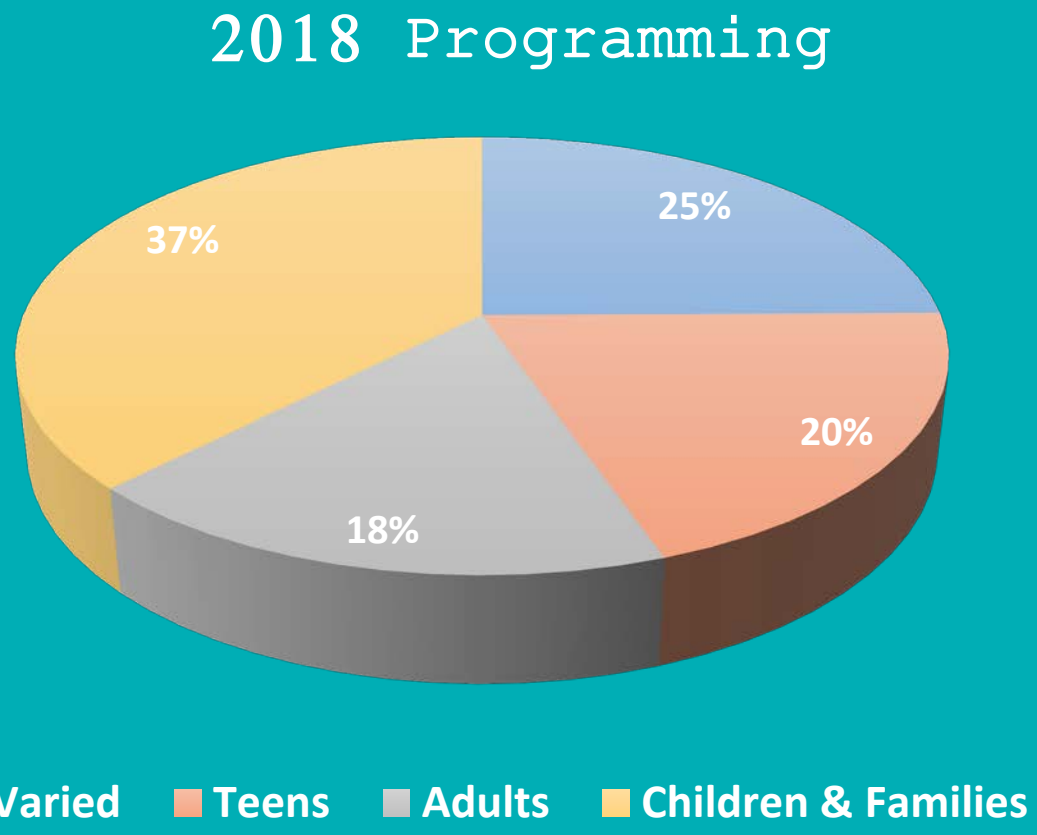

2018 Community Engagement Activities

Season	Event Category	Event Name	# of Events	Target Market
Spring	Healthy Living	Jazzercise on the Ribbon	8	Adults & Teens
Spring	Healthy Living	Parkour in the Park	5	Teens
Spring	Healthy Living	Roller Skating Lessons	11	Varied
Spring	Entertainment	Drone Racing in The Ribbon	3	Varied
Spring	Signature Event	Carrousel Grand Opening	1	Varied
Spring	Children & Families	Magical Mondays	6	Children & Families
Spring	Arts & Culture	Art in the Park	5	Teens
Spring	Children & Families	Sunday FunDay	8	Children & Families
Spring	Arts & Culture	Pianos in the Park	Ongoing	Varied
Spring	Entertainment	Friday Night Flights	3	Adults
Spring	Arts & Culture	Kids' Gallery (1st Friday)	2	Children & Families
Summer	Arts & Culture	Pianos in the Park	Ongoing	Varied
Summer	Children & Families	Sunday FunDay	8	Children & Families
Summer	Children & Families	Magical Mondays	6	Children & Families
Summer	Arts & Culture	Art in the Park	5	Teens
Summer	Siganture	Riverfront Eats	12	Varied
Summer	Healthy Living	River Flow Yoga on S. Howard Bridge	13	Adults & Teens
Summer	Entertainment	Rockin' the Ribbon	5	Teens
Summer	Healthy Living	Parkour in the Park	3	Teens
Summer	Entertainment	Friday Night Flights	3	Adults
Summer	Arts & Culture	Kids' Gallery (1st Friday)	2	Children & Families
Fall	Signature	Spokane Heritage Days	2	Varied
Fall	Signature	Kid Ninja Course	1	Children & Families
Fall	Entertainment	Bark in the Park	1	Varied
Fall	Chidren & Families	School Field Trips	16	Children
Winter	Signature	Mass Valentine's Day Wedding	1	Adults
Winter	Entertainment	Family Friendly Comedy	4	Children & Families
Winter	Arts & Culture	Holiday Arts & Craft Market	3	Varied
Winter	Healthy Living	Snowman Festival & Sledding	2	Varied

2019 Programming Snapshot

~ Signature Events ~

1. Pavilion Grand Opening Event (2-3 Day)
2. Summer Concert Series
3. Spokane Symphony Summer Series
4. Valentine's Day Mass Wedding
5. Movie & Local Performing Arts Series
6. Yoga Series w/My Fresh Basket

Return to Page 3

Chronology of Discussion Regarding the Rides Program at Riverfront Park

- **9/10/2012 – RFP Committee-** Staff express concern about rides revenue projections for 2013 budget citing private sector competition, sales trends, ride condition, and increased costs.
- **10/1/2012 – RFP Committee –** discussion on Attractions Financial analysis. Closure option for rides was provided and reviewed.
- **11/21/2012 – Document –** Staff releases financial analysis on rides program showing year-over-year loss of from 2007 to 2012. Calculations include indirect cost (overheard) and depreciation.
- **12/3/2012 – RFP Committee –** Significant discussion regarding cost reduction strategies for rides due to increased loses. Items discussed included hours or operation, maintenance, minimum wage increase, management, indirect cost, cost controls and more.
- **1/7/2013 – RFP Committee –** Staff discusses statistics for Pavilion Rides Program
- **1/10/2013 – PB –** Staff expressed support for rides in park until master plan process is complete
- **4/2013 –** RFP Advisory Committee was formed consisting of 18 volunteers
- **10/17/2013 – RFP Advisory Committee -** Committee voted against amusement rides on the North Bank and agreed they do want amusement rides in the park seasonally
- **11/14/2013 – PB –** As part of the master plan update, staff reported RFP advisory committee has recommended destination ride.
- **12/11/2013 – RFP Advisory Committee –** Voted against converting IMAX as a 4D ride opting instead to remove the IMAX building
- **5/16/2013 – Document –** Staff releases financial analysis on attractions showing year-over-year loss of pavilion rides from 2010 to 2012. Calculations include indirect cost (overheard) and depreciation.
- **6/14/2013 – Document** - Rides Program Analysis completed for master plan
- **1/9/2014 – PB –** As part of the master plan update, staff reported RFP Advisory Committee recommendation to remove rides from park
- **3/5/2014 – Document –** Citizen Engagement Study complete by Desautel Hege of 400 citizens concluded a small minority wanted to add rides, attractions and events to Riverfront Park.
- **4/17/2014 – Document-** RFP Advisory committee final report is released and cited rides were incompatible with pavilion or in future park. Recommended bringing in rides for specials weeks as carnival and signature ride operated by third party

- **4/17/2014 – Open House –** First of two open public houses held as a special meeting of the Park Board to present RFP Advisory committee recommendations and to take public comment.
- **4/24/2014 – Open House** – Second of two open public houses held as a special meeting of the Park Board to present RFP Advisory committee recommendations and to take public comment.
- **6/5/2014 – Document –** Riverfront Park Master Plan was released recommending closure of amusement rides citing financial performance. Financial provided summarized revenue and expenditures without specifically calling out indirect cost. Numbers correlate to document generated by staff on 5/16/13.
- **10/8/2015 – Special PB Meeting & Document** – Park Board members completed a questionnaire and discussed items they felt were important to the Pavilion
- **6/22/2016 – Special PB Meeting –** US Pavilion Workshop. Leroy summarized results from Oct 2015 Park Board vision questionnaire that there was strong agreement for no permanent rides in pavilion.
- **7/11/2016 – RFP Committee –** Mr. McGlathery presented benefits of keeping a rides program focusing on park safety, seasonal jobs, and revenue creation
- **8/11/2016 – PB –** Mr. McGlathery gave public comment regarding removal of rides.
- **9/6/2016 – RFP Committee –** Mr. McGlathery provided update on his survey of citizens supporting rides
- **9/8/2016 – PB –** Staff recommends pavilion ride closure for 2017 due to project revenue loss and construction impacts. PB received public comment from 9 citizens in favor of keeping rides.
- **4/12/2017 – RFP Committee –** Staff recommend surplus of Rides consistent with Master Plan. Committee directed staff to bring resolution in May 2017 for action. Mr. McGlathery provided public comment in support of rides.
- **5/8/2017 – RFP Committee –** Approves resolution in 4-to-1 vote to save up to 3 rides to be determined by staff. Mr. McGlathery (SAFER) provided public comment and urged more time for new board members to review rides program
- **5/11/2017 – PB –** Adopts Rides surplus resolution in 8-to-1 vote. Resolution directs staff to keep up to 3 rides. Mr. McGlathery (SAFER) urged Park Board to delay action to study the feasibility of placing rides on the North Bank.
- **7/10/2017 – PB –** Staff presented selection and criteria for keeping Berry Go Round, Spider and tour train. Unanimously approved.
- **8/10/2017 – PB –** Jon introduces vision for future park programming
- **4/12/2018 – PB –** Mr. McGlathery ask PB to consider rides and season pass on North Bank

Return to Page 3

Riverfront Park Redevelopment Project Update

May 2018

Bond Budget Utilization Through May 2018

(March 8, 2018 Approved Budget)

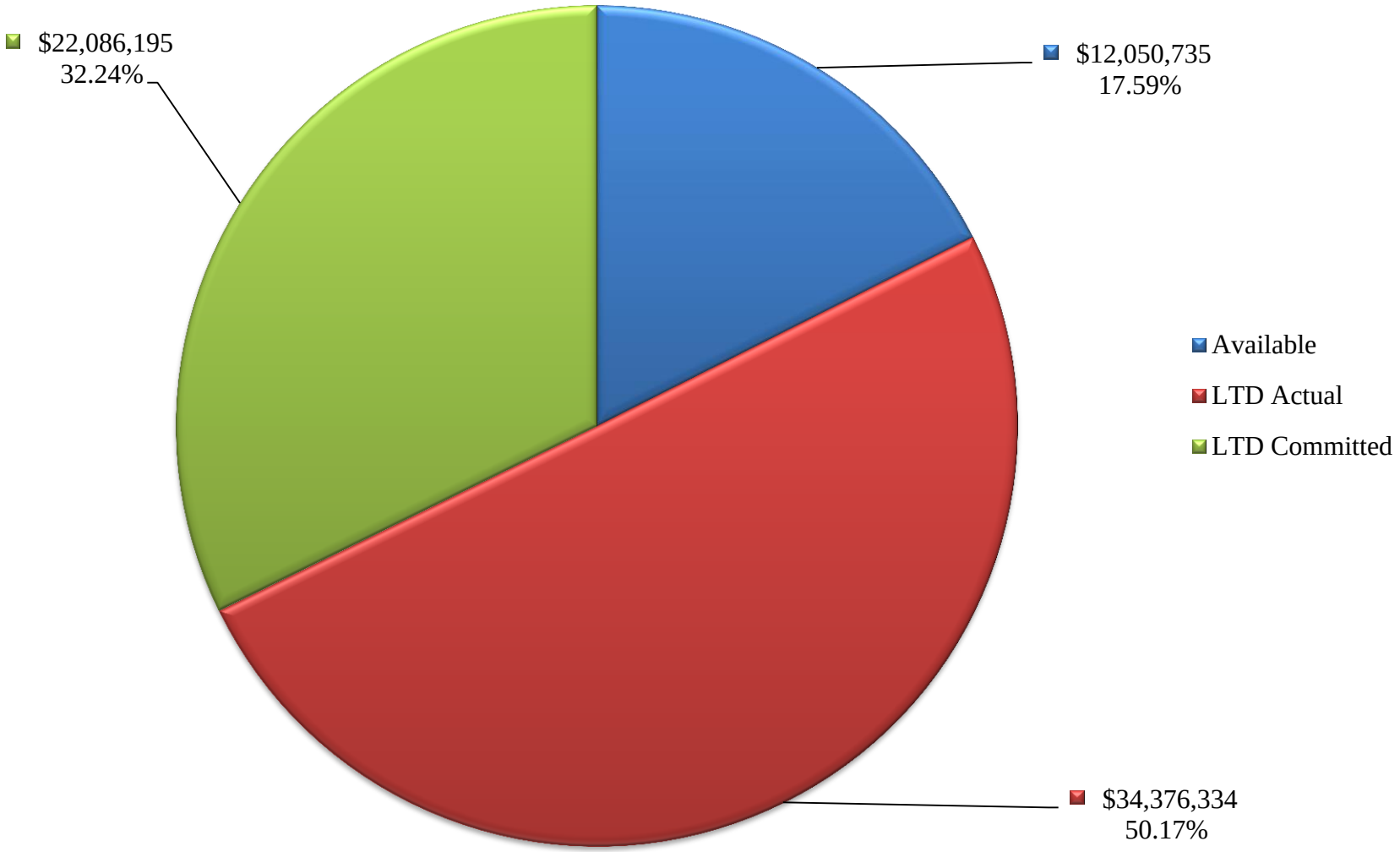

Comparison of Approved Bond Budget to Actual & Committed Expenditures
May 2018

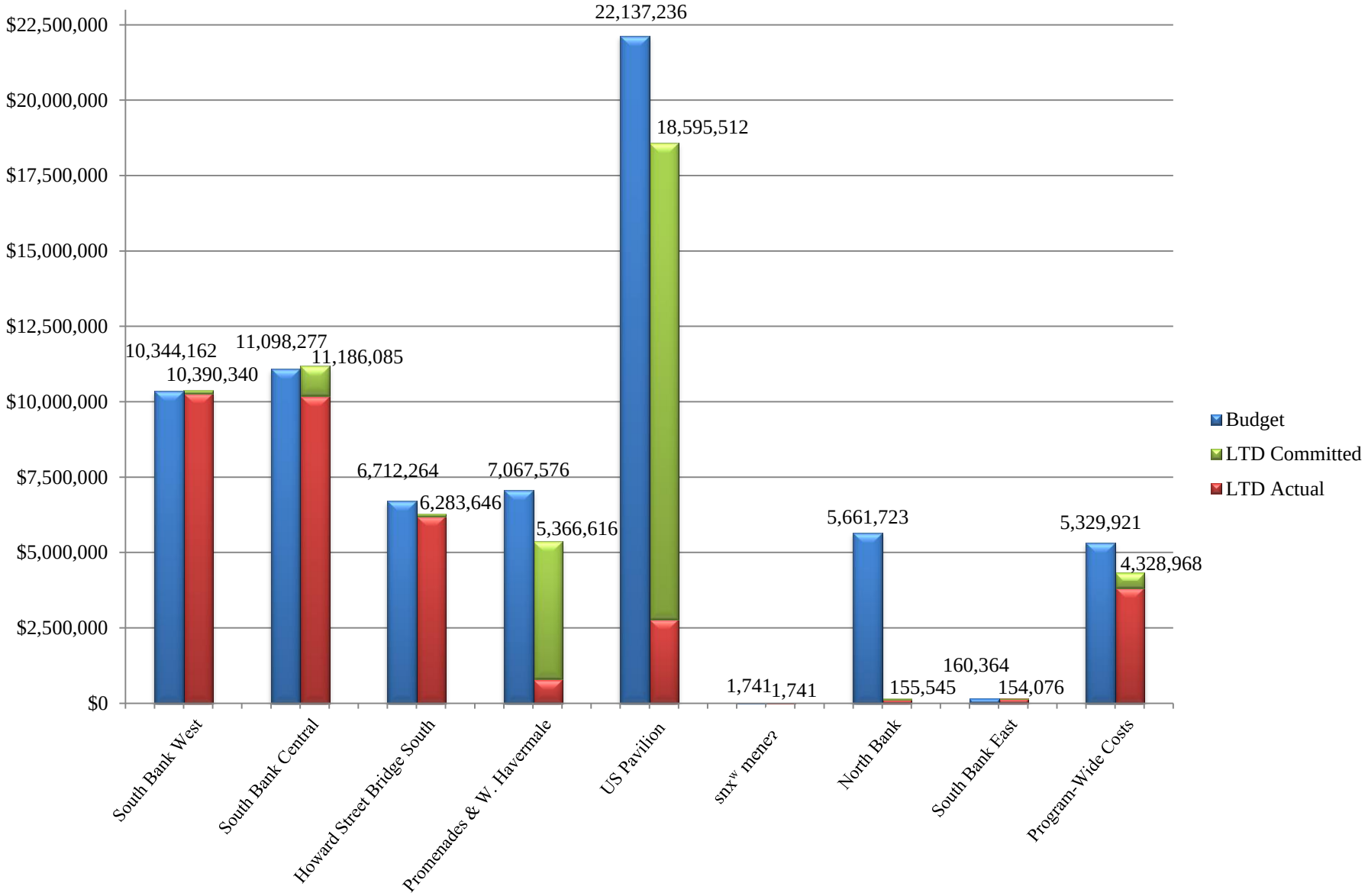

Bond Budget by Project

(March 8, 2018 Approved Budget)

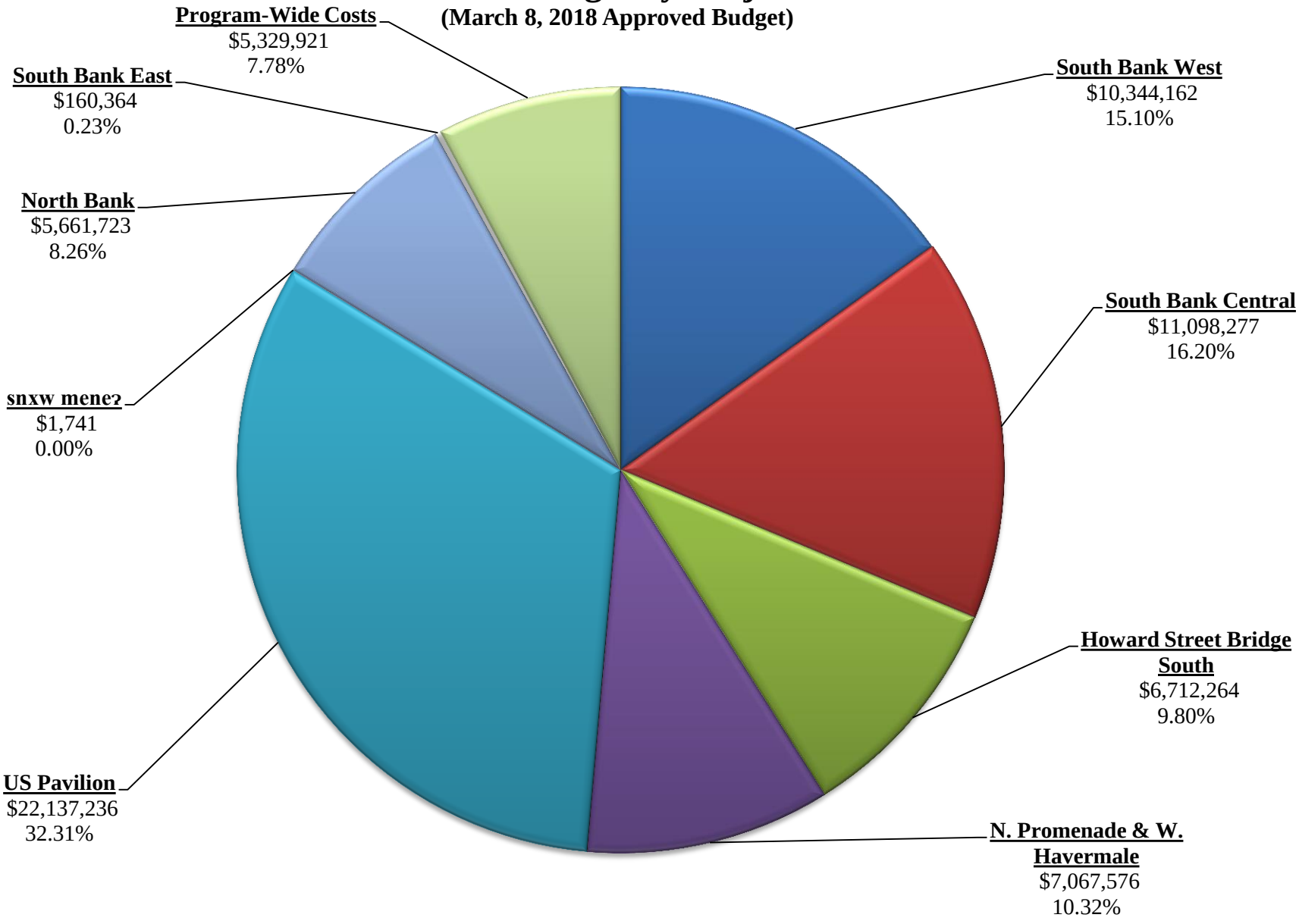

Return to Page 3

City of Spokane Briefing Paper
Planning Brownfields Program:
Riverfront Park Committee Briefing on EPA Grants
June 11, 2018

Subject

EPA awarded the City three grants for Brownfield Cleanup in Riverfront Park during the redevelopment: Havermale Island Site A, Canada Island Site B, and North Bank Site C. This Briefing is to provide the Riverfront Park Committee a status update on the grant implementation.

Status Update

May 2018 Recap:

- The EPA approved the three Analysis of Brownfield Cleanup Alternatives (ABCAs) plans; they are posted for the public on the website https://my.spokanecity.org/riverfrontpark/redevelopment/a-cleaner-park/ and are available for hardcopy review in the Parks and Planning Departments.
- 3/30/2018 the EPA's required Quality Assurance Project Plan (QAPP) draft was submitted for EPA comments, but due to staffing challenges at EPA we do not yet have approval or comments back.
- EPA, Ecology, Dept of Commerce, and I had an extensive conference call to discuss the project's Ecology (VCP) and who the VCP and the EPA grants will work together, possible additional funding, the current progress of the cleanup project, and how the soils are being reused.

Looking forward—June

- Contracting Amendments to be completed
- QAPP comments and/or approval back from EPA
- Ability to move forward contractually

Actions

None requested at this time.

For more information: Teri Stripes, Assistant Planner, tstripes@spokanecity.org, X6597